## *PLEASE READ PRIOR TO INSTALLATION FOR SAFETY.*

| | |
|---|---|
| DANGER | ☑ AC input power must be disconnected before any wiring to the AC motor drive is made.<br>☑ Even if the power has been turned off, a charge may still remain in the DC-link capacitors with hazardous voltages before the POWER LED is OFF. Please do not touch the internal circuit and components.<br>☑ There are highly sensitive MOS components on the printed circuit boards. These components are especially sensitive to static electricity. Please do not touch these components or the circuit boards before taking anti-static measures. Never reassemble internal components or wiring.<br>☑ Ground the AC motor drive using the ground terminal. The grounding method must comply with the laws of the country where the AC motor drive is to be installed.<br>☑ DO NOT install the AC motor drive in a place subjected to high temperature, direct sunlight and inflammables. |
| CAUTION | ☑ Never connect the AC motor drive output terminals U/T1, V/T2 and W/T3 directly to the AC mains circuit power supply.<br>☑ The rated voltage of the AC motor drive must be ≤ 240V for 230 series, and ≤ 480V for 460 series and the current should be less than 5000A RMS (40HP (30kW) should be less than 10000A RMS).<br>☑ Only qualified persons are allowed to install, wire and maintain the AC motor drives.<br>☑ Even if the 3-phase AC motor is stop, a charge may still remain in the main circuit terminals of the AC motor drive with hazardous voltages.<br>☑ The performance of electrolytic capacitor will degrade if it is not charged for a long time. It is recommended to charge the driver which is stored in no charge condition every 2 years for 3~4 hours.<br>☑ Please use adjustable AC power source (ex: AC autotransformer) to charge the driver gradually to rated voltage, and should not charge it directly with rated voltage.<br>☑ Pay attention to the following when transporting and installing this package (including wooden crate, wood stave and carton box)<br>1. If you need to sterilize, deworm the wooden crate or carton box, please do not use steamed smoking sterilization or you will damage the VFD.<br>2. Please use other ways to sterilize or deworm.<br>3. You may use high temperature to sterilize or deworm. Leave the packaging materials in an environment of over 56ºC for 30 minutes.<br>☑ It is strictly forbidden to use steamed smoking sterilization. The warranty does not covered VFD damaged by steamed smoking sterilization.<br>☑ Please connect the drive to a 3-phase three-wire or 3-phase four-wire Wye system to comply with UL standards.<br>☑ Since the leakage current of the motor drive is higher than 3.5 mA a.c. or 10 mA d.c., the end users are advised to follow at least one of the procedures below to avoid electric shock: |

| | |
|---|---|
| | 1. Connect the motor drive to the ground by using a copper wire with a sectional area of 10 mm2 minimum or an aluminum wire with a sectional are of 16 mm2 minimum.<br>2. Install an electricity leakage breaker. |

**NOTE**

- For a detailed explanation of the product specifications, the cover or the safety shields will be disassembled on some pictures or graphics. When the product is put to operation, please install the top cover and safety shield and ensure correct wiring. Refer to the manual to ensure safe operation.
- The figures in this instruction are for reference only, they may be slightly different from your actual drive, but it will not affect your customer rights.
- The content of this manual may be revised without prior notice. Please consult our distributors or download the most updated version at http://www.delta.com.tw/industrialautomation

# Table of Contents

**CHAPTER 1 INTRODUCTION ..... 1-1**

1-1 Nameplate information ..... 1-2
1-2 Model name ..... 1-3
1-3 Serial number ..... 1-3
1-4 RFI jumper ..... 1-4
1-5 Dimensions ..... 1-7

**CHAPTER 2 INSTALLATION ..... 2-1**

**CHAPTER 3 UNPACKING ..... 3-1**

**CHAPTER 4 WIRING ..... 4-1**

**CHAPTER 5 MAIN CIRCUIT TERMINALS ..... 5-1**

5-1 Specifications of Control Terminal ..... 5-4
5-2 Remove the Terminal Block ..... 5-7

**CHAPTER 6 CONTROL TERMINALS ..... 6-1**

6-1 Remove the Cover for Wiring ..... 6-4
6-2 Specifications of Control Terminal ..... 6-6
6-3 Remove the Terminal Block ..... 6-8

**CHAPTER 7 OPTIONAL ACCESSORIES ..... 7-1**

7-1 Brake Resistors and Brake Units Selection Chart ..... 7-2
7-2 Non-fuse Circuit Breaker ..... 7-7
7-3 Fuse Specification Chart ..... 7-9
7-4 AC/DC Reactor ..... 7-11
7-5 Zero Phase Reactors ..... 7-36
7-6 EMC Filter ..... 7-39
7-7 Digital Keypad ..... 7-51
7-8 Panel Mounting ..... 7-55
7-9 Conduit Box Kit ..... 7-57
7-10 Fan Kit ..... 7-34
7-11 Flange Mounting Kit ..... 7-79
7-12 USB/RS-485 Communication Interface IFD6530 ..... 7-94

**CHAPTER 8 OPTION CARDS ..... 8-1**

8-1 Optional Card Installation ..... 8-2
8-2 EMC-D42A (I/O Extension Card) ..... 8-9
8-3 EMC-D611A (I/O Extension Card) ..... 8-9
8-4 EMC-R6AA (Relay Extension Card) ..... 8-10

8-5 CMC-MOD01 (Communication Extension Card).....8-11
8-6 CMC-PD01 (Communication Extension Card).....8-15
8-7 CMC-DN01 (Communication Extension Card).....8-17
8-8 CMC-EIP01.....8-20
8-9 EMC-COP01 (Communication Extension Card).....8-25
8-10 EMC-BPS01 (24V Power Extension Card).....8-27

**CHAPTER 9 SPECIFICATIONS ..... 9-1**

9-1 230V Series.....9-2
9-2 460V Series.....9-3
9-3 575V Series.....9-5
9-4 690V Series.....9-6
9-5 Environment for Operation, Storage and Transportation.....9-8
9-6 Specification for Operation Temperature and Protection Level.....9-9
9-7 Derating of ambient temperature and altitude.....9-10

**CHAPTER 10 DIGITAL KEYPAD ..... 10-1**

10-1 Descriptions of Digital Keypad .....10-2
10-2 Function of Digital Keypad KPC-CC01.....10-5
10-3 TPEditor Installation Instruction .....10-20
10-4 Fault Code Description of Digital Keypad KPC-CC01.....10-29
10-5 Unsupported Functions when using TPEditior on KPC-CC01 Keypad.....10-33

**CHAPTER 11 SUMMARY OF PARAMETERS ..... 11-1**

**CHAPTER 12 DESCRIPTIONS OF PARAMETER SETTING ..... 12-1**

**CHAPTER 13 WARNING CODES ..... 13-1**

**CHAPTER 14 FAULT CODES AND DESCRIPTIONS ..... 14-1**

**CHAPTER 15 CANOPEN OVERVIEW ..... 15-1**

15-1 CANopen Overview..... 15-3
15-2 Wiring for CANopen..... 15-6
15-3 CANopen Communication Interface Description..... 15-7
15-4 CANopen Supporting Index ..... 15-17
15-5 CANopen Fault Code ..... 15-23
15-6 CANopen LED Function..... 15-31

**CHAPTER 16 PLC FUNCTION APPLICATIONS ..... 16-1**

16-1 PLC Summary..... 16-2
16-2 Notes before PLC use..... 16-3
16-3 Turn on..... 16-5
16-4 Basic principles of PLC ladder diagrams..... 16-16
16-5 Various PLC device functions..... 16-27
16-6 Introduction to the Command Window..... 16-41

16-7 Error display and handling..... 16-120
16-8 CANopen Master control applications..... 16-121
16-9 Explanation of various PLC speed mode controls…….....16-134
16-10 Internal communications main node control..... 16-136
16-11 Modbus remote IO control applications (use MODRW)..... 16-140
16-12 Calendar functions……..16-147

**CHAPTER 17 INTRODUCTION TO BACnet.....17-1**

**CHAPTER 18 SAFE TORQUE OFF FUNCTION.....18-1**

**APPENDIX A. PUBLICATION HISTORY ..... A-1**

| | |
|---|---|
| **Application** | **Control Board: V2.03**<br>**Keypad: V1.10** |

[ This page intentionally left blank ]

# *Chapter 1 Introduction*

1-1 Nameplate Information

1-2 Model Name

1-3 Serial Number

1-4 RFI Jumper

1-5 Dimensions

## Receiving and Inspection

After receiving the AC motor drive, please check for the following:

1. Please inspect the unit after unpacking to assure it was not damaged during shipment.
2. Make sure that the part number printed on the package corresponds with the part number indicated on the nameplate.
3. Make sure that the voltage for the wiring lie within the range as indicated on the nameplate.
4. When wiring the AC motor drive, please make sure that the wiring of input terminals “R/L1, S/L2, T/L3” and output terminals ”U/T1, V/T2, W/T3” are correct to prevent drive damage.
5. When power is applied, select the language and set the parameter groups via the digital keypad (KPC-CC01).

## 1-1 Nameplate Information:

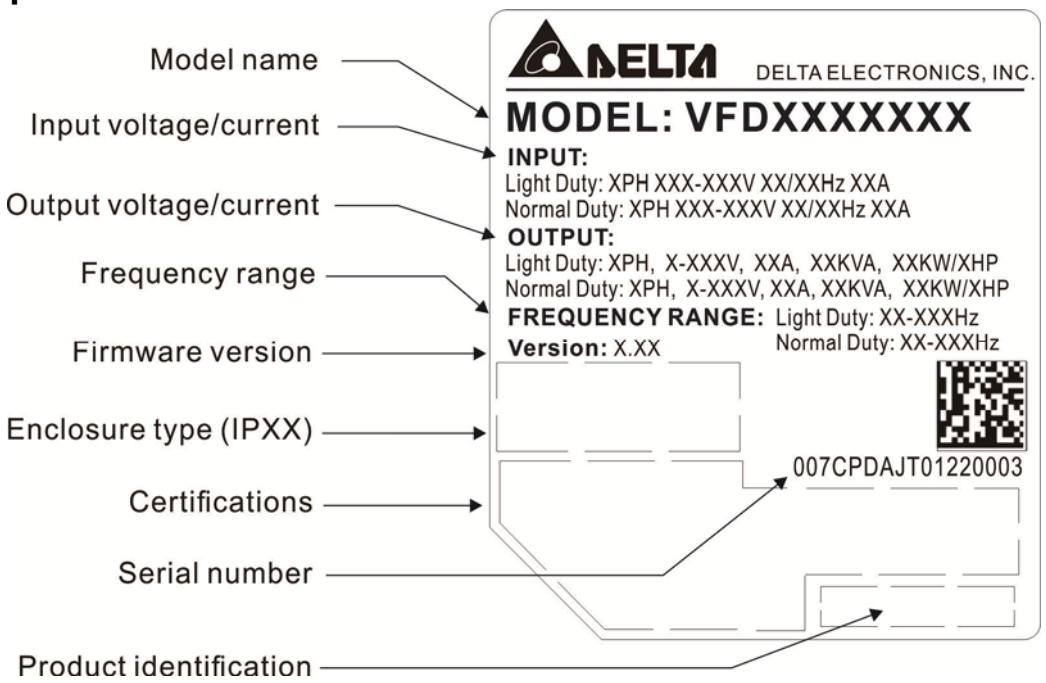

## 1-2 Model Name:

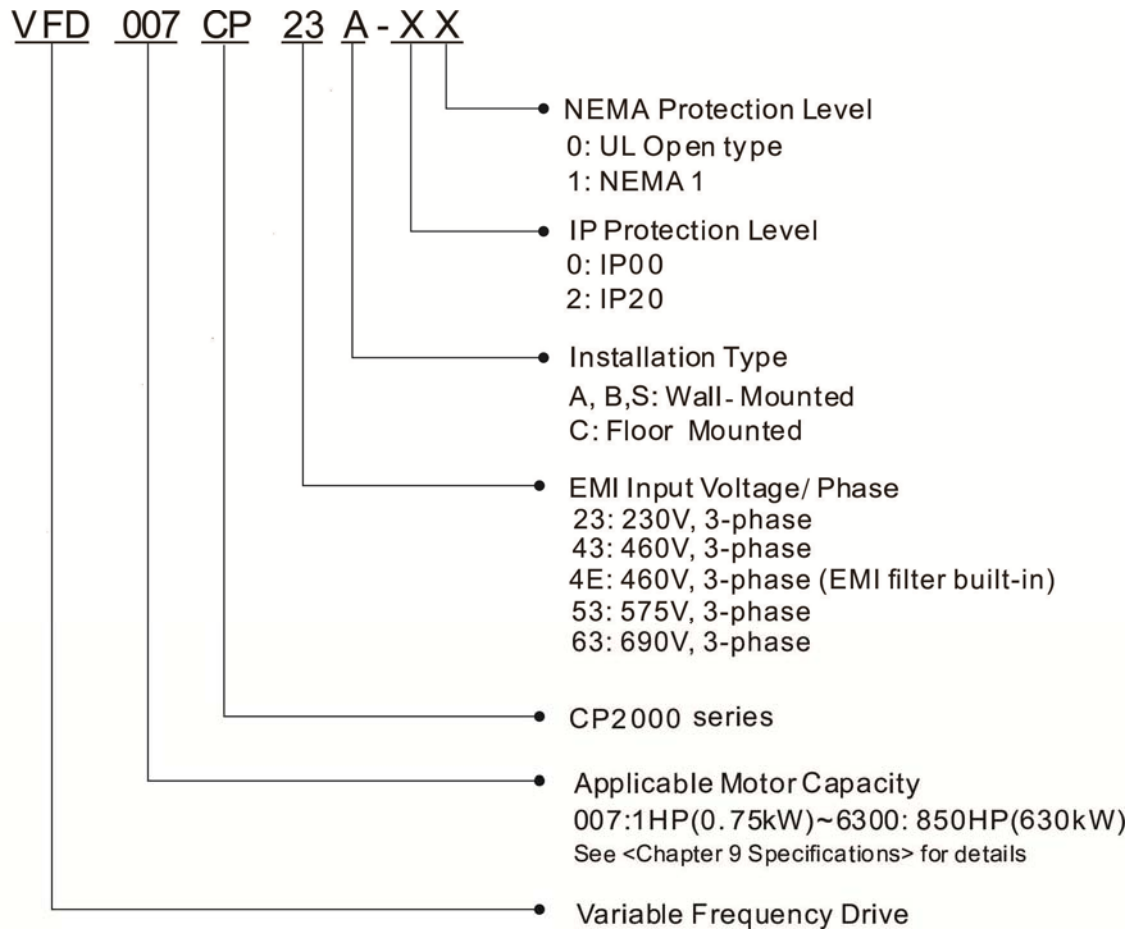


## 1-3 Serial Number:

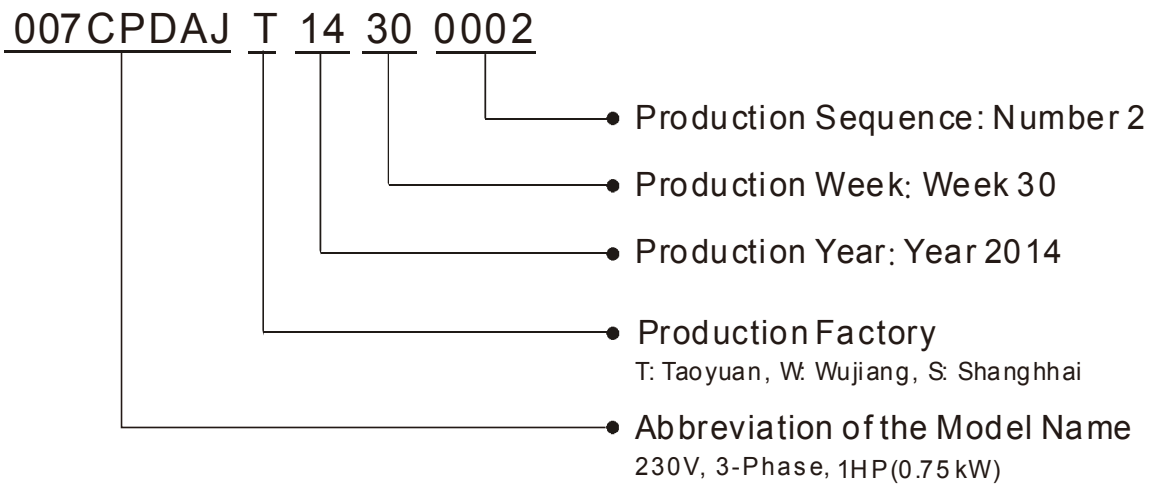

## 1-4 RFI Jumper

RFI Jumper: The AC motor drive may emit the electrical noise. The RFI jumper can enable internal filter to suppress the interference (Radio Frequency Interference) on the power line.

Frame A~C

Screw Torque: 8~10kg-cm[6.9-8.7 lb -in.]

Loosen the screws and remove the MOV-PLATE. Fasten the screws back to the original position after MOV-PLATE is removed.

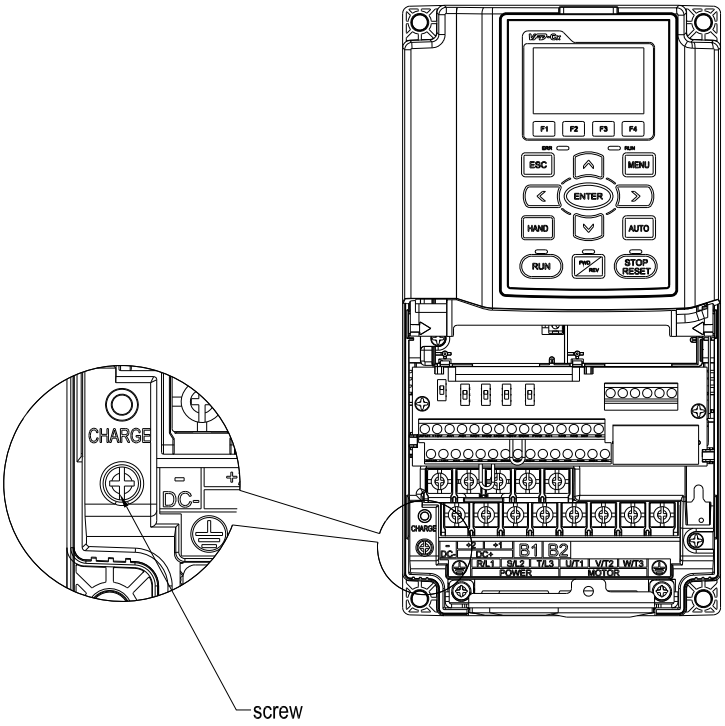


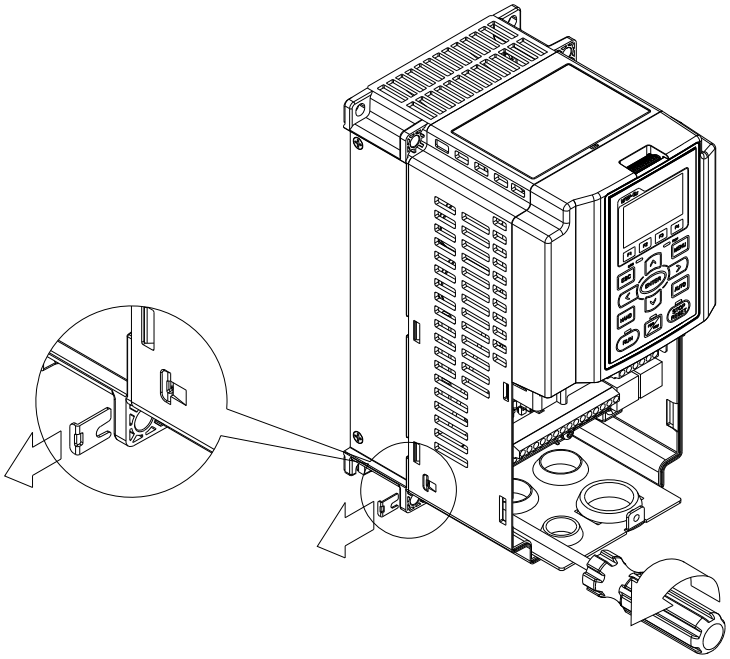

Frame D0~H

Remove the MOV-PLATE by hands, no screws need to be loosen

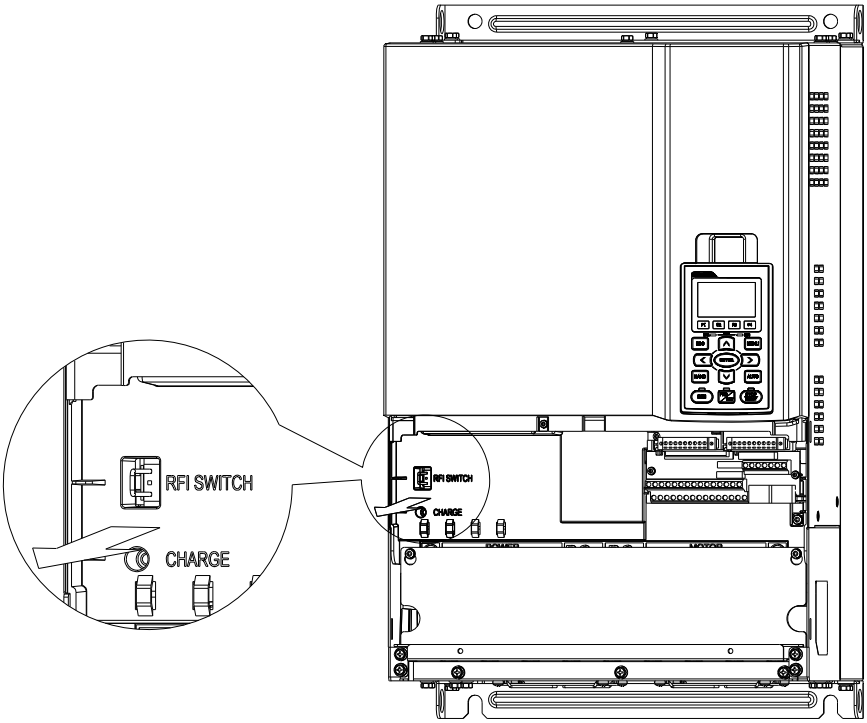


Isolating main power from ground:

When the power distribution system of the AC motor drive is a floating ground system (IT) or an asymmetric ground system (TN), the RFI jumper must be removed. After removing RFI jumper, cuts off the internal RFI capacitor (filter capacitor) between the system's frame and the central circuits to avoid damaging the central circuits and (according to IEC 61800-3) reduce the ground leakage current.

Important points regarding ground connection

- ☑ To ensure the safety of personnel, proper operation, and to reduce electromagnetic radiation, the Power Regenerative Unit must be properly grounded during installation.
- ☑ The diameter of the cables must meet the size specified by safety regulations.
- ☑ The shielded cable must be connected to the ground of the Power Regenerative Unit to meet safety regulations.
- ☑ The shielded cable can only be used as the ground for equipment when the aforementioned points are met.
- ☑ When installing multiple sets of Power Regenerative Units, do not connect the grounds of the Power Regenerative Units in series. As shown below

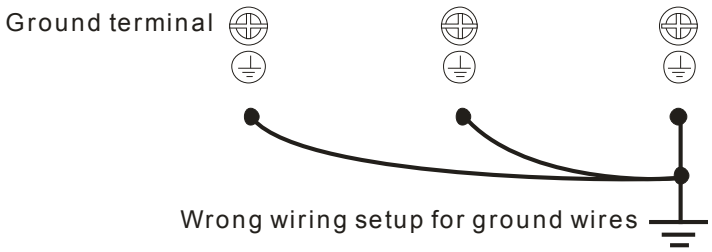

Pay particular attention to the following points:

☑ After turning on the main power, do not remove the RFI jumper while the power is on.

☑ Make sure the main power is turned off before removing the RFI jumper.

☑ Cutting the RFI short-circuit cable will also cut off the conductivity of the capacitor. Gap discharge may occur once the transient voltage exceeds 1000V.

If the RFI jumper is removed, there will no longer be reliable electrical isolation. In other words, all controlled input and outputs can only be seen as low-voltage terminals with basic electrical isolation. Also, when the internal RFI capacitor is cut off, the AC motor drive will no longer be electromagnetic compatible.

☑ The RFI jumper may not be removed if the main power is a grounded power system.

☑ The RFI jumper may not be removed while conducting high voltage tests. When conducting a high voltage test to the entire facility, the main power and the motor must be disconnected if leakage current is too high.

Floating Ground System (IT Systems)

A floating ground system is also called IT system, ungrounded system, or high impedance/resistance (greater than 30Ω) grounding system.

☑ Disconnect the ground cable from the internal EMC filter.

☑ In situations where EMC is required, check whether there is excess electromagnetic radiation affecting nearby low-voltage circuits. In some situations, the adapter and cable naturally provide enough suppression. If in doubt, install an extra electrostatic shielded cable on the power supply side between the main circuit and the control terminals to increase security.

☑ Do not install an external RFI/EMC filter, the EMC filter will pass through a filter capacitor, thus connecting power input to ground. This is very dangerous and can easily damage the AC motor drive.

Asymmetric Ground System (Corner Grounded TN Systems)

Caution: Do not cut the RFI jumper while the input terminal of the AC motor drive carries power.

In the following four situations, the RFI jumper must be removed. This is to prevent the system from grounding through the RFI capacitor, damaging the AC motor drive.

| RFI jumper must be removed | |
|---|---|
| 1 Grounding at a corner in a triangle configuration 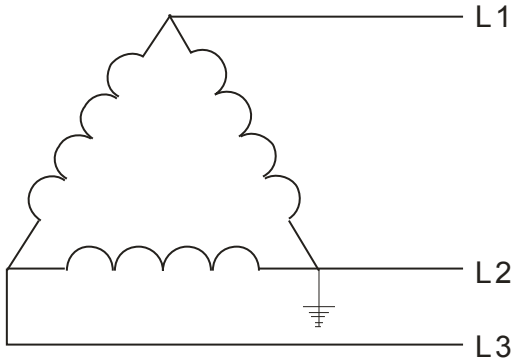  | 2 Grounding at a midpoint in a polygonal configuration 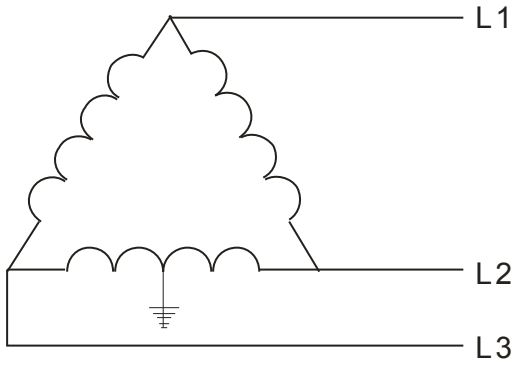  |

| 3 Grounding at one end in a single-phase configuration | 4 No stable neutral grounding in a three-phase autotransformer configuration |
|---|---|
| 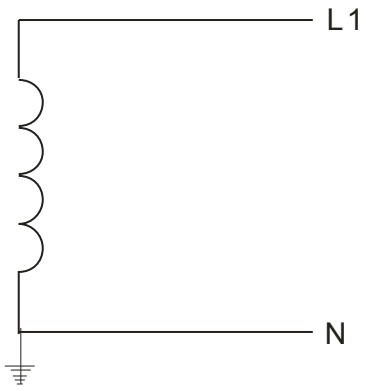 | 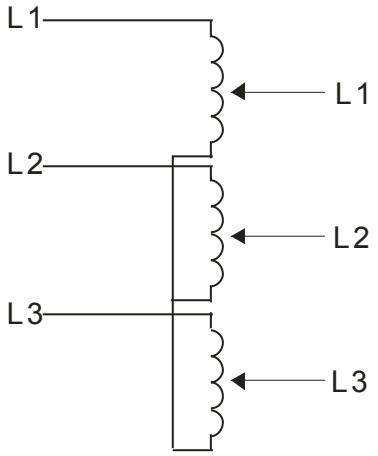 |
| RFI jumper can be used | |
| Internal grounding through internal RFI filter, which reduces electromagnetic radiation. In a situation with higher requirements for electromagnetic compatibility, and using a symmetrical grounding power system, an EMC filter can be installed. As a reference, the diagram on the right is a symmetrical grounding power system. | 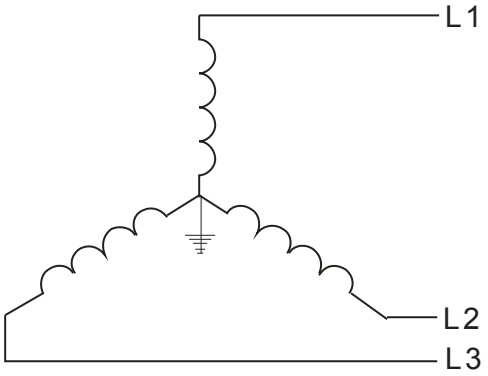 |

# 1-5 Dimensions:

Frame A

VFD007CP23A-21; VFD015CP23A-21; VFD022CP23A-21; VFD037CP23A-21; VFD055CP23A-21; VFD007CP43A-21; VFD015CP43B-21; VFD022CP43B-21; VFD037CP43B-21; VFD040CP43A-21; VFD055CP43B-21; VFD075CP43B-21; VFD007CP4EA-21; VFD015CP4EB-21; VFD022CP4EB-21; VFD037CP4EB-21; VFD040CP4EA-21; VFD055CP4EB-21; VFD075CP4EB-21; VFD015CP53A-21; VFD022CP53A-21; VFD037CP53A-21

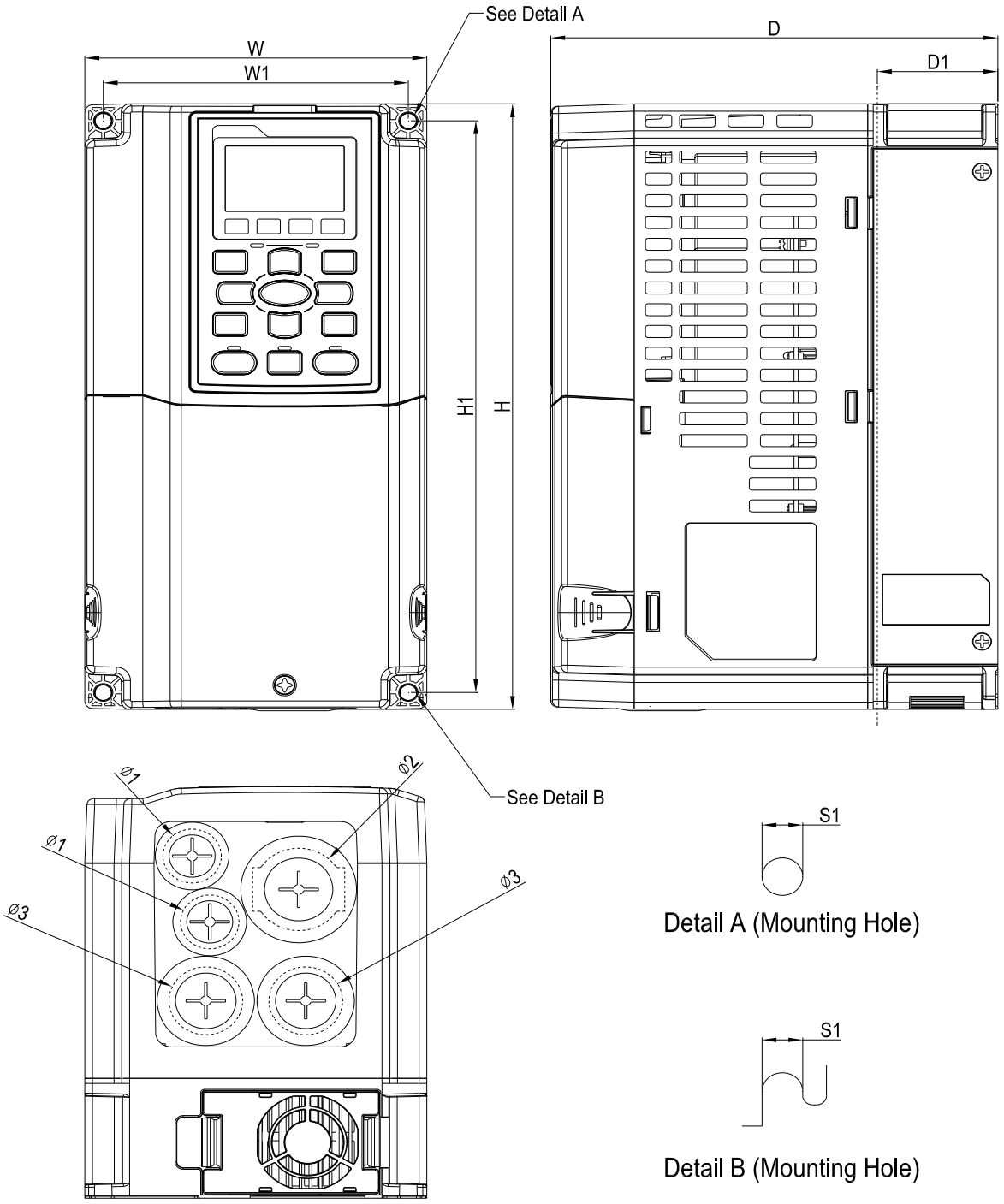


Unit: mm [inch]

| Frame | W | H | D | W1 | H1 | D1* | S1 | Φ1 | Φ2 | Φ3 |
|---|---|---|---|---|---|---|---|---|---|---|
| A | 130.0<br>[5.12] | 250.0<br>[9.84] | 170.0<br>[6.69] | 116.0<br>[4.57] | 236.0<br>[9.29] | 45.8<br>[1.80] | 6.2<br>[0.24] | 22.2<br>[0.87] | 34.0<br>[1.34] | 28.0<br>[1.10] |

D1*: Flange mounting

Frame B

VFD075CP23A-21; VFD110CP23A-21; VFD150CP23A-21; VFD110CP43B-21; VFD150CP43B-21; VFD185CP43B-21; VFD110CP4EB-21; VFD150CP4EB-21; VFD185CP4EB-21; VFD055CP53A-21; VFD075CP53A-21; VFD110CP53A-21; VFD150CP53A-21

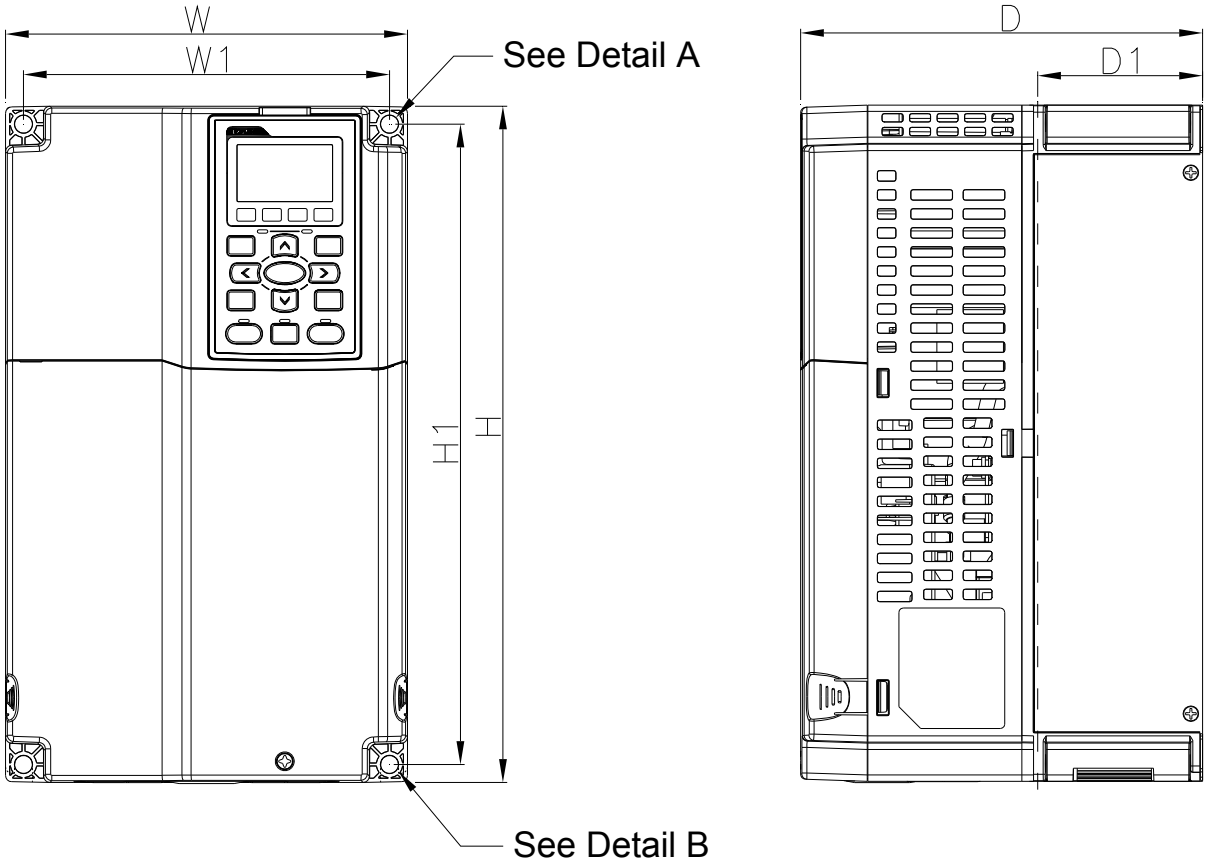


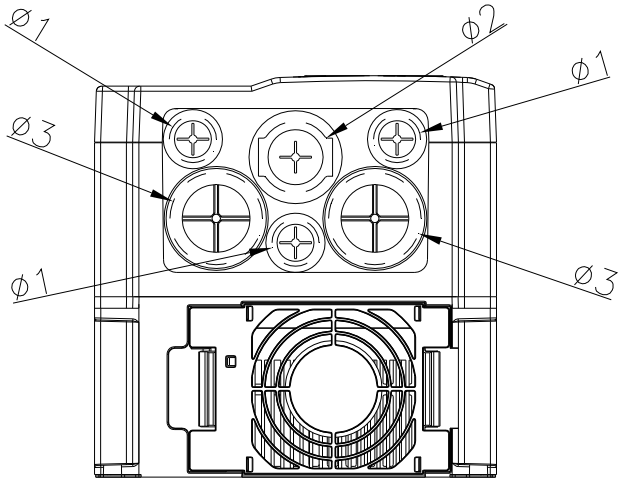


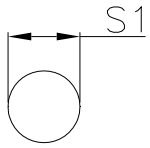


Detail A (Mounting Hole)

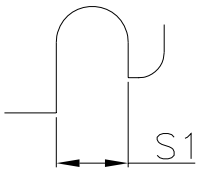


Detail B (Mounting Hole)

Unit: mm [inch]

| Frame | W | H | D | W1 | H1 | D1* | S1 | Φ1 | Φ2 | Φ3 |
|---|---|---|---|---|---|---|---|---|---|---|
| B | 190.0 [7.48] | 320.0 [12.60] | 190.0 [7.48] | 173.0 [6.81] | 303.0 [11.93] | 77.9 [3.07] | 8.5 [0.33] | 22.2 [0.87] | 34.0 [1.34] | 43.8 [1.72] |

D1*: Flange mounting

Frame C

VFD185CP23A-21; VFD220CP23A-21; VFD300CP23A-21; VFD220CP43A-21; VFD300CP43B-21; VFD370CP43B-21; VFD220CP4EB-21; VFD300CP4EB-21; VFD370CP4EB-21; VFD185CP63A-21; VFD220CP63A-21; VFD300CP63A-21; VFD370CP63A-21

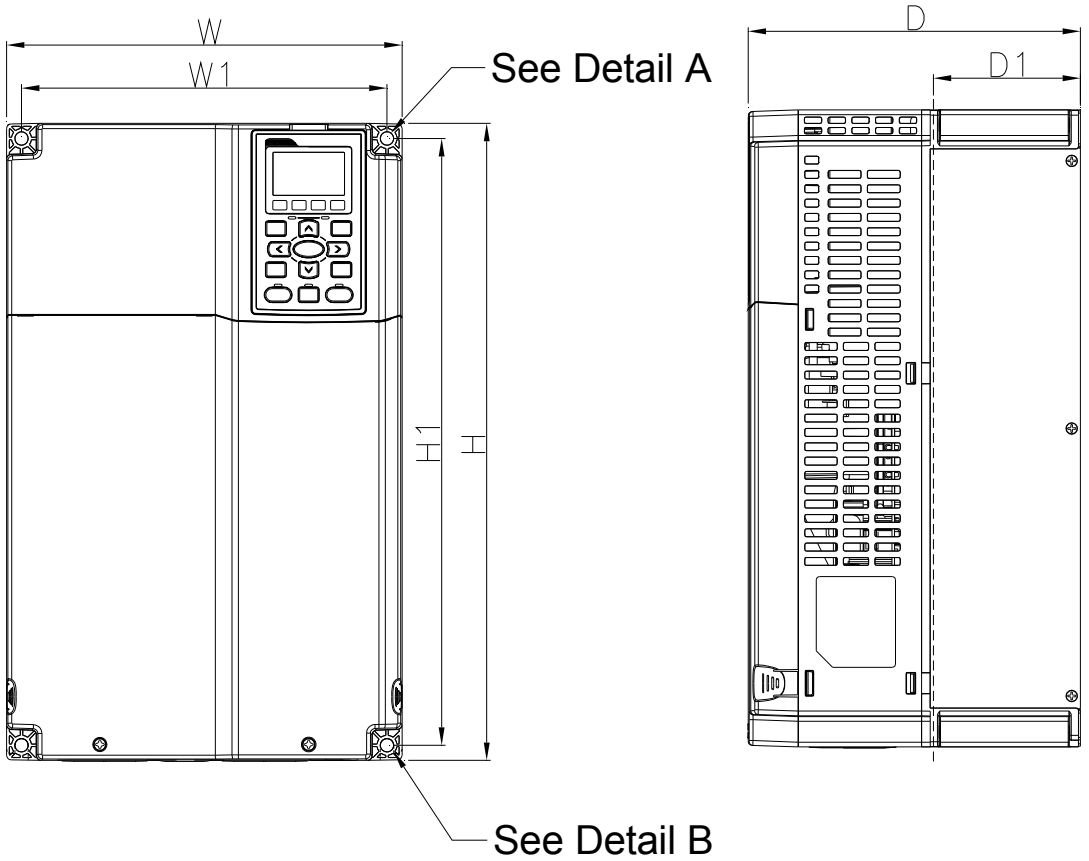


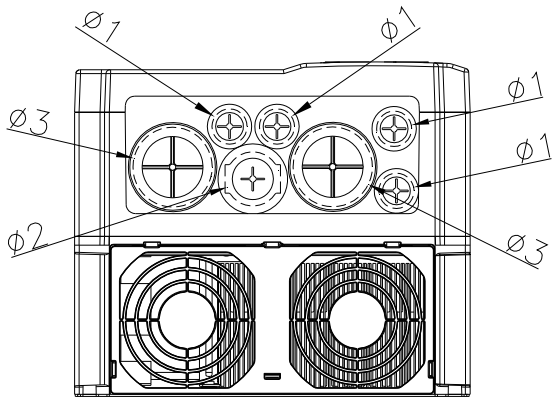


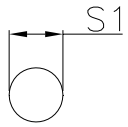


Detail A (Mounting Hole)

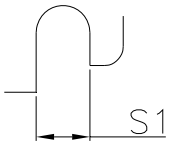


Detail B (Mounting Hole)

Unit: mm [inch]

| Frame | W | H | D | W1 | H1 | D1* | S1 | Φ1 | Φ2 | Φ3 |
|---|---|---|---|---|---|---|---|---|---|---|
| C | 250.0 [9.84] | 400.0 [15.75] | 210.0 [8.27] | 231.0 [9.09] | 381.0 [15.00] | 92.9 [3.66] | 8.5 [0.33] | 22.2 [0.87] | 34.0 [1.34] | 50.0 [1.97] |

D1*: Flange mounting

## Frame D

### D0-1: VFD450CP43S-00; VFD550CP43S-00

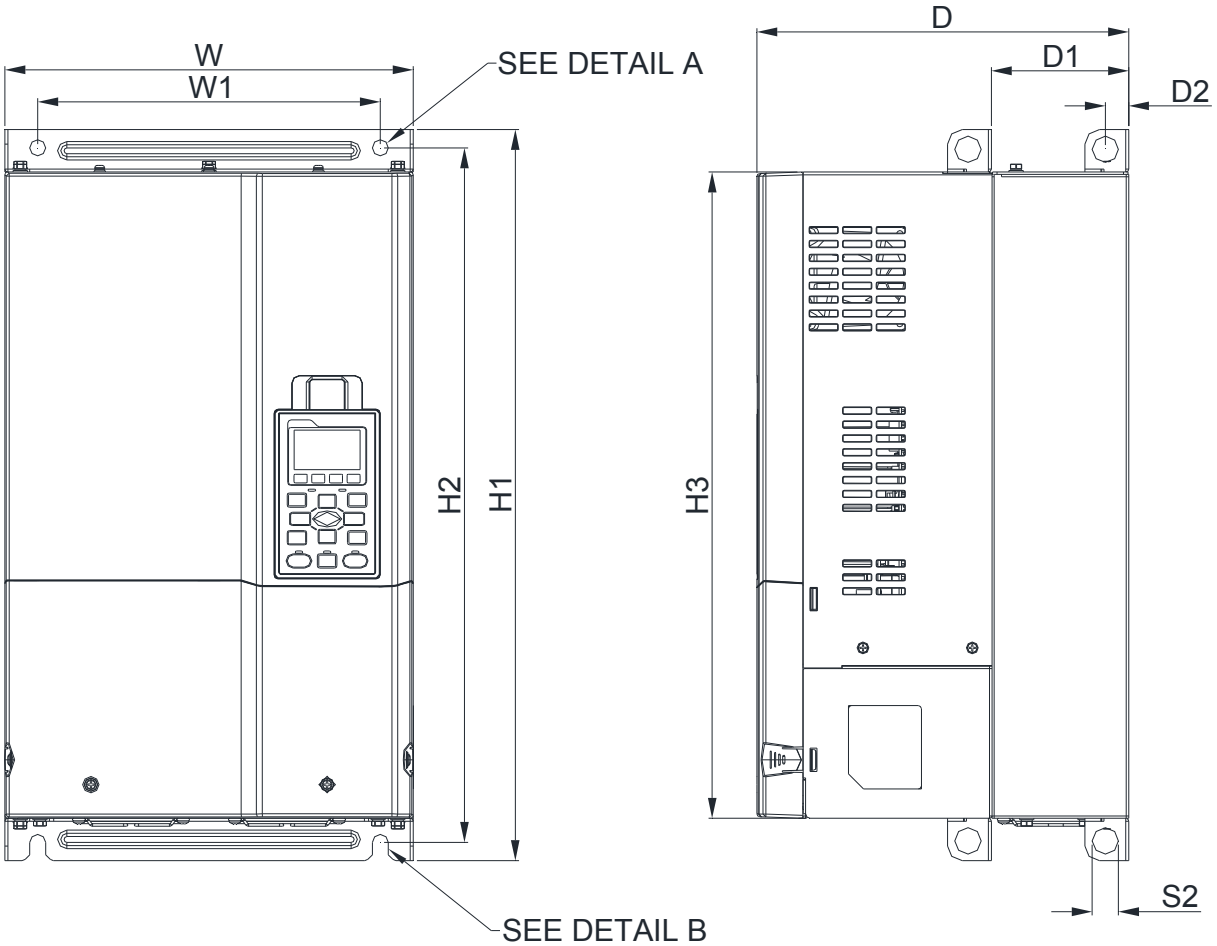


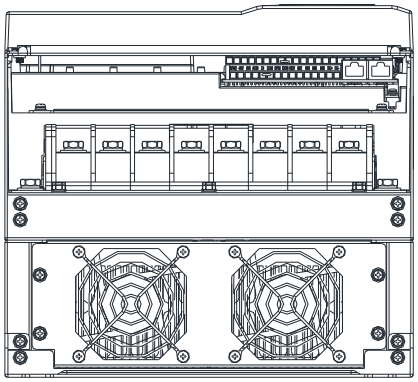

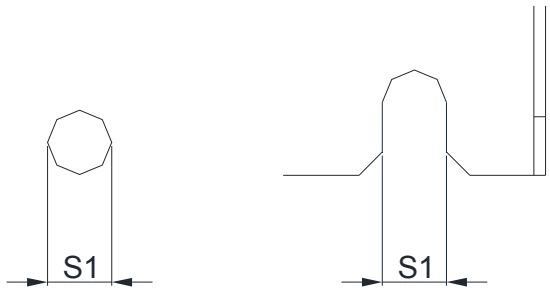


DETAIL A (MOUNTING HOLE)

DETAIL B (MOUNTING HOLE)

Unit: mm [inch]

| Frame | W | H1 | D | W1 | H2 | H3 | D1* | D2 | S1 | S2 |
|---|---|---|---|---|---|---|---|---|---|---|
| D0-1 | 280.0 [11.02] | 500.0 [19.69] | 255.0 [10.04] | 235.0 [9.25] | 475.0 [18.70] | 442.0 [17.40] | 94.2 [3.71] | 16.0 [0.63] | 11.0 [0.43] | 18.0 [0.71] |

D1*: Flange mounting

## Frame D

### D0-2 VFD450CP43S-21; VFD550CP43S-21

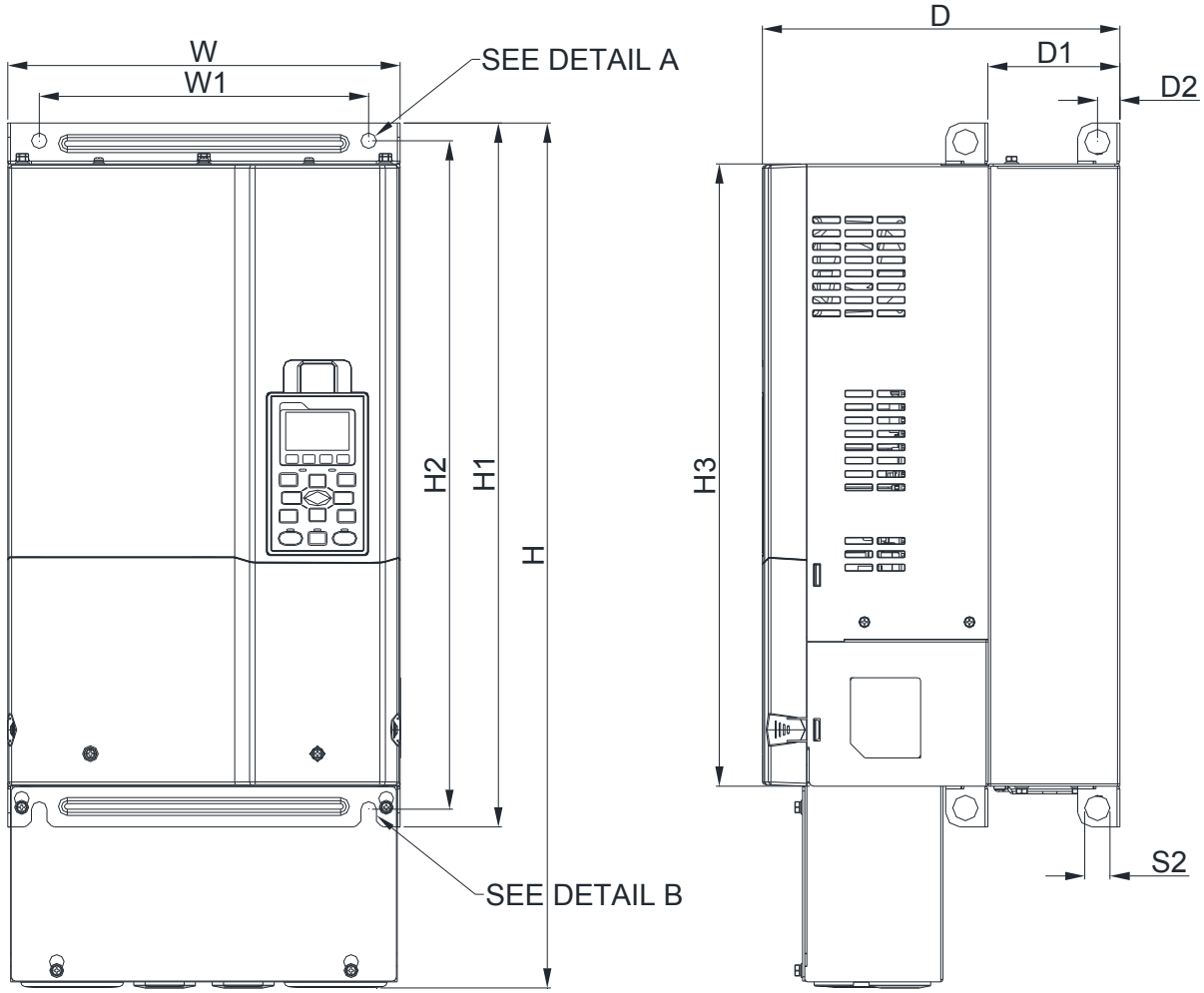


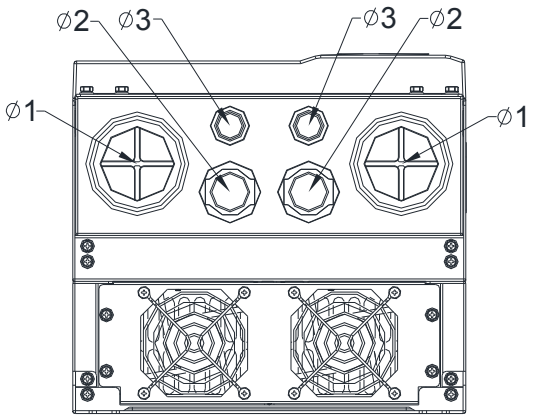


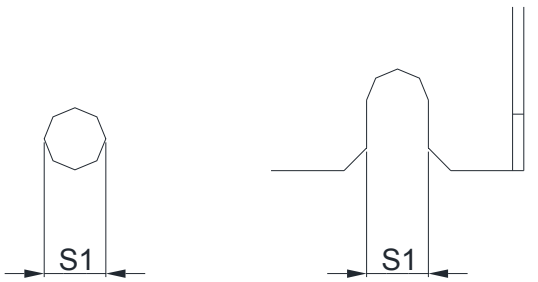


DETAIL A
(MOUNTING HOLE)

DETAIL B
(MOUNTING HOLE)

Unit: mm [inch]

| Frame | W | H | D | W1 | H1 | H2 | H3 | D1* | D2 | S1 | S2 | Φ1 | Φ2 | Φ3 |
|---|---|---|---|---|---|---|---|---|---|---|---|---|---|---|
| D0-2 | 280.0 [11.02] | 614.4 [24.19] | 255.0 [10.04] | 235.0 [9.25] | 500.0 [19.69] | 475.0 [18.70] | 442.0 [17.40] | 94.2 [3.71] | 16.0 [0.63] | 11.0 [0.43] | 18.0 [0.71] | 62.7 [2.47] | 34.0 [1.34] | 22.0 [0.87] |

D1*: Flange mounting

Frame D

D1:

VFD370CP23A-00; VFD450CP23A-00; VFD750CP43B-00; VFD900CP43A-00; VFD450CP63A-00; VFD550CP63A-00

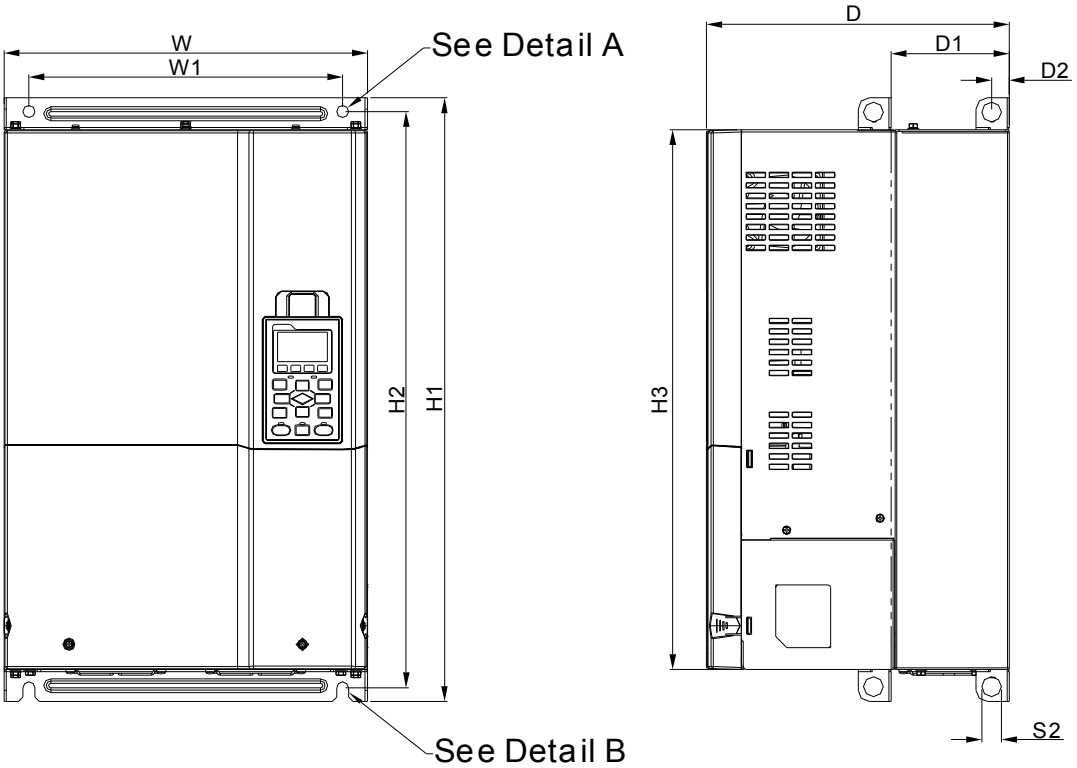


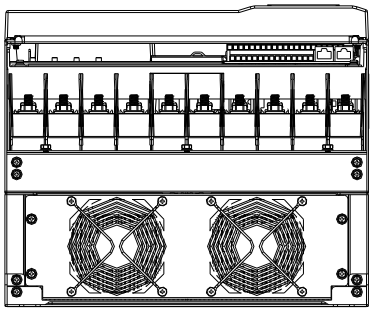

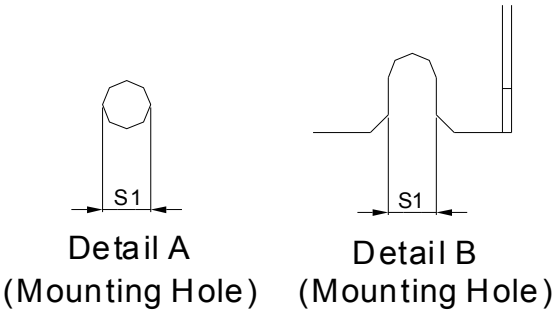


Unit: mm [inch]

| Frame | W | H | D | W1 | H1 | H2 | H3 | D1* | D2 | S1 | S2 | Φ1 | Φ2 | Φ3 |
|---|---|---|---|---|---|---|---|---|---|---|---|---|---|---|
| D1 | 330.0 [12.99] | - | 275.0 [10.83] | 285.0 [11.22] | 550.0 [21.65] | 525.0 [20.67] | 492.0 [19.37] | 107.2 [4.22] | 16.0 [0.63] | 11.0 [0.43] | 18.0 [0.71] | - | - | - |

D1*: Flange mounting

Frame D

D2:

VFD370CP23A-21; VFD450CP23A-21; VFD750CP43B-21; VFD900CP43A-21; VFD450CP63A-21; VFD550CP63A-21

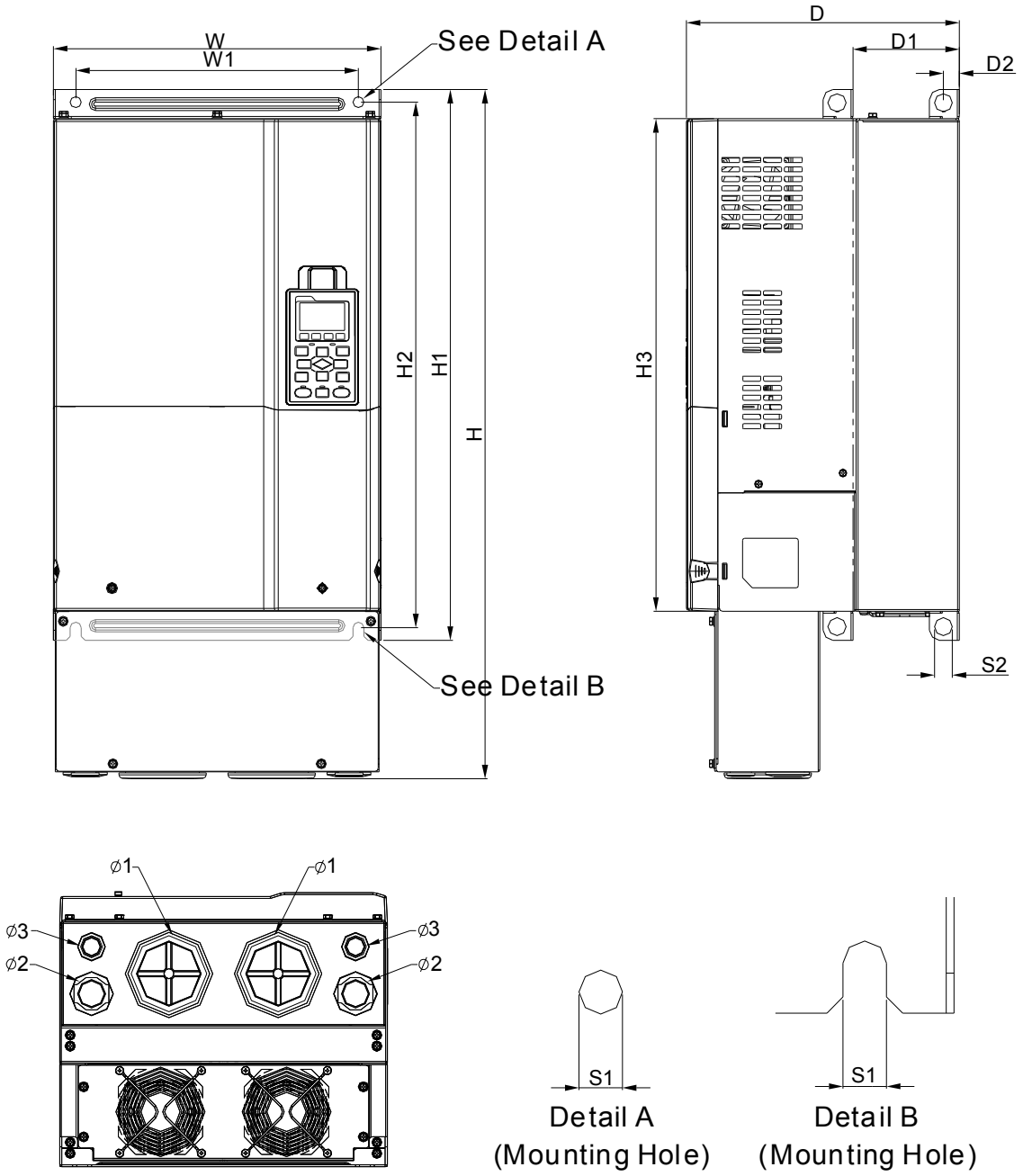


Unit: mm [inch]

| Frame | W | H | D | W1 | H1 | H2 | H3 | D1* | D2 | S1 | S2 | Φ1 | Φ2 | Φ3 |
|---|---|---|---|---|---|---|---|---|---|---|---|---|---|---|
| D2 | 330.0 [12.99] | 688.3 [27.10] | 275.0 [10.83] | 285.0 [11.22] | 550.0 [21.65] | 525.0 [20.67] | 492.0 [19.37] | 107.2 [4.22] | 16.0 [0.63] | 11.0 [0.43] | 18.0 [0.71] | 76.2 [3.00] | 34.0 [1.34] | 22.0 [0.87] |

D1*: Flange mounting

Frame E

E1:

VFD550CP23A-00; VFD750CP23A-00; VFD900CP23A-00; VFD1100CP43A-00; VFD1320CP43B-00; VFD750CP63A-00; VFD900CP63A-00; VFD1100CP63A-00; VFD1320CP63A-00

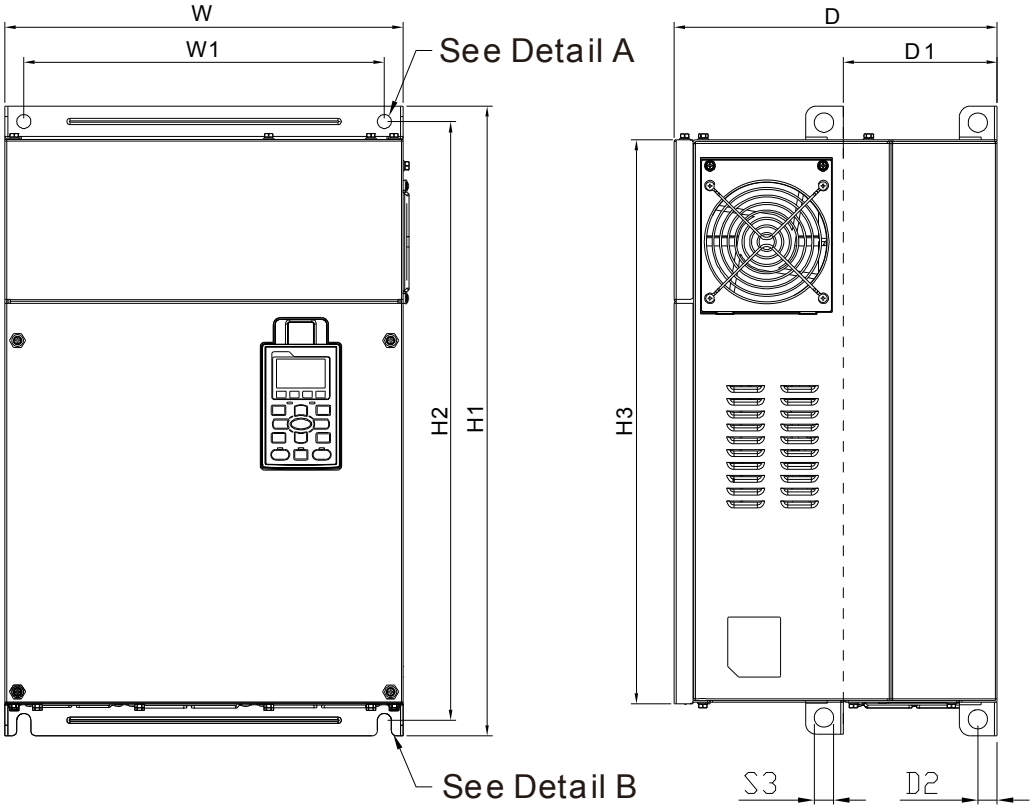


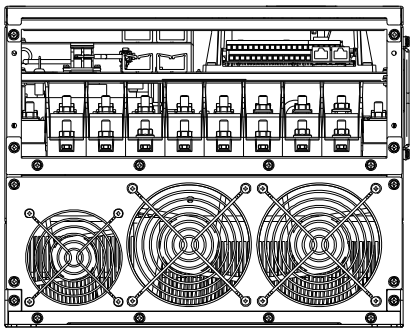

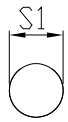


Detail A
(Mounting Hole)

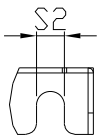


Detail B
(Mounting Hole)

Unit: mm [inch]

| Frame | W | H | D | W1 | H1 | H2 | H3 | D1* | D2 | S1/S2 | S3 | Φ1 | Φ2 | Φ3 |
|---|---|---|---|---|---|---|---|---|---|---|---|---|---|---|
| E1 | 370.0 [14.57] | - | 300.0 [11.81] | 335.0 [13.19 | 589.0 [23.19] | 560.0 [22.05] | 528.0 [20.80] | 143.0 [5.63] | 18.0 [0.71] | 13.0 [0.51] | 18.0 [0.71] | - | - | - |

D1*: Flange mounting

Frame E

E2:

VFD550CP23A-21; VFD750CP23A-21; VFD900CP23A-21; VFD1100CP43A-21; VFD1320CP43B-21; VFD750CP63A-21; VFD900CP63A-21; VFD1100CP63A-21; VFD1320CP63A-21

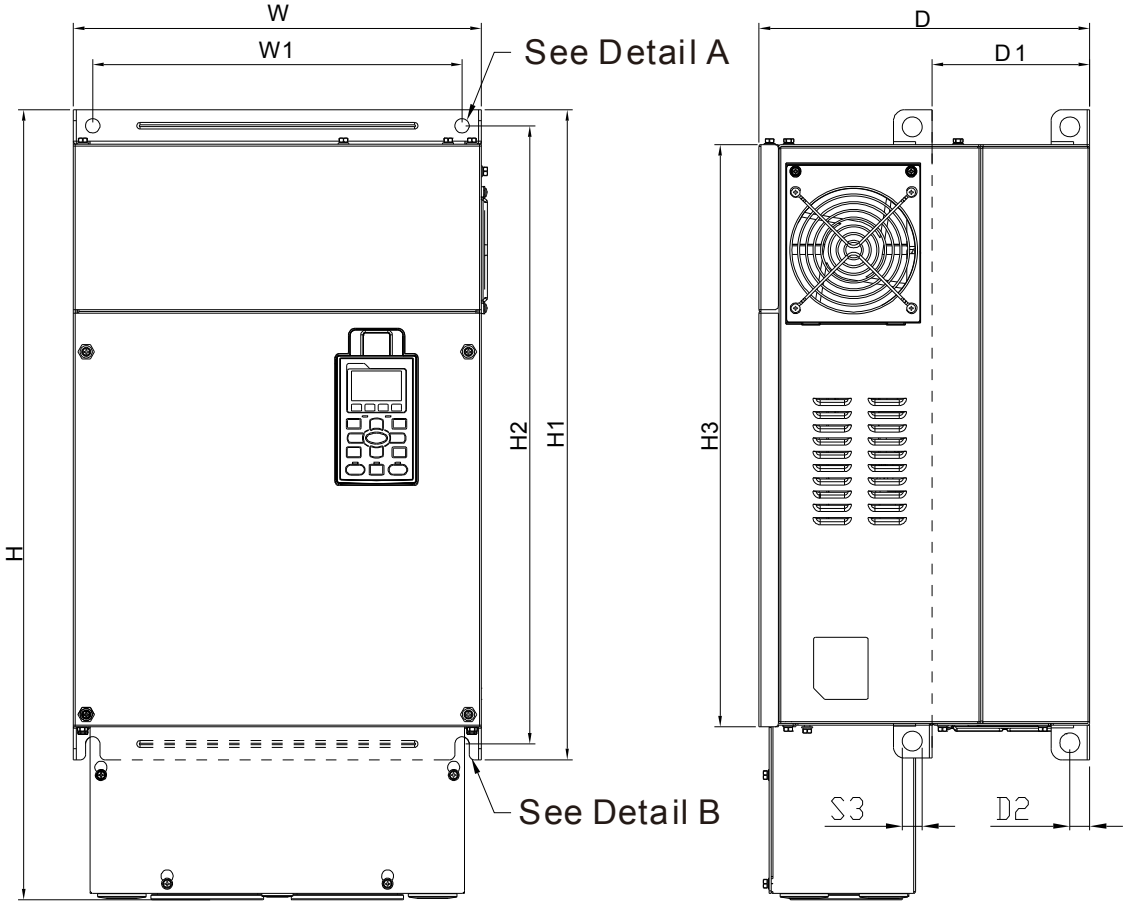


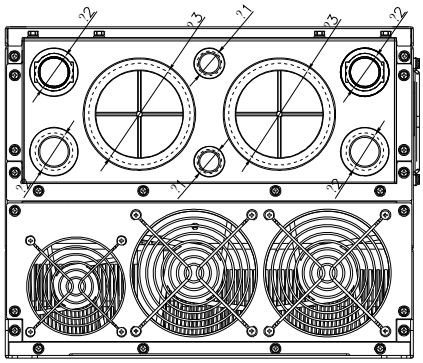

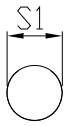


Detail A
(Mounting Hole)

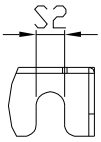


Detail B
(Mounting Hole)

Unit: mm [inch]

| Frame | W | H | D | W1 | H1 | H2 | H3 | D1* | D2 | S1, S2 | S3 | Φ1 | Φ2 | Φ3 |
|---|---|---|---|---|---|---|---|---|---|---|---|---|---|---|
| E2 | 370.0 [14.57] | 715.8 [28.18] | 300.0 [11.81] | 335.0 [13.19 | 589.0 [23.19] | 560.0 [22.05] | 528.0 [20.80] | 143.0 [5.63] | 18.0 [0.71] | 13.0 [0.51] | 18.0 [0.71] | 22.0 [0.87] | 34.0 [1.34] | 92.0 [3.62] |

D1*: Flange mounting

Frame F

F1:

VFD1600CP43A-00; VFD1850CP43B-00; VFD1600CP63A-00; VFD2000CP63A-00

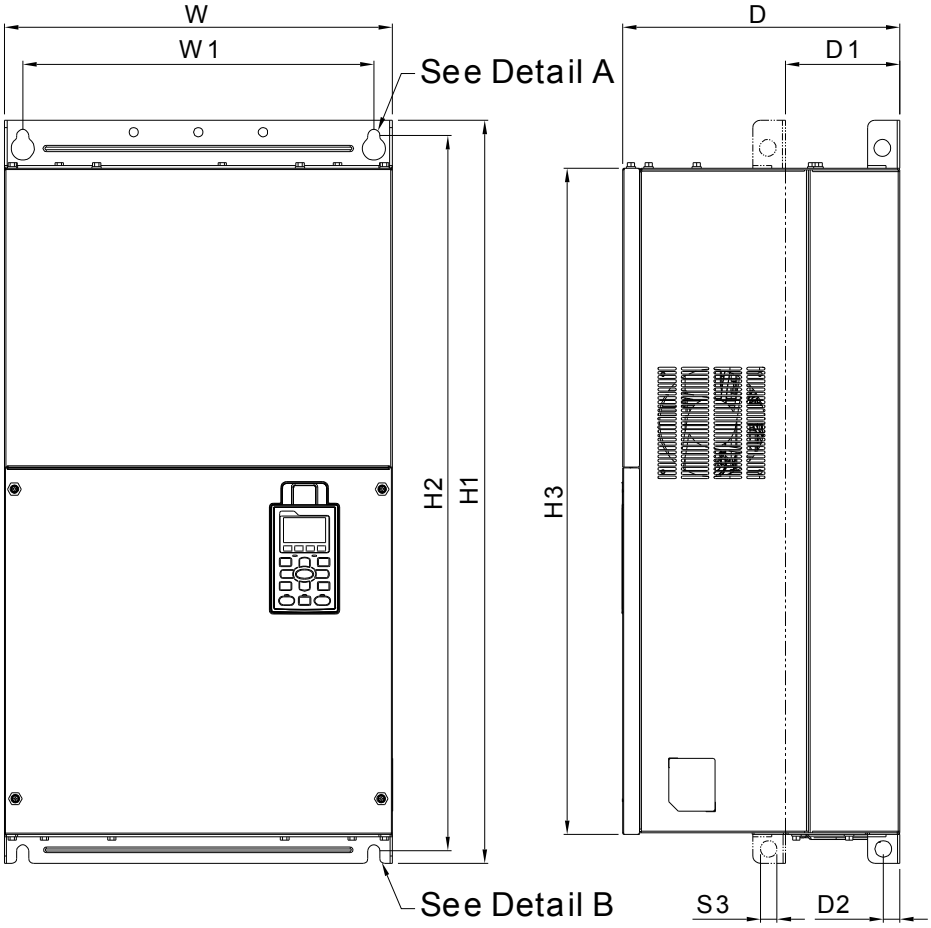


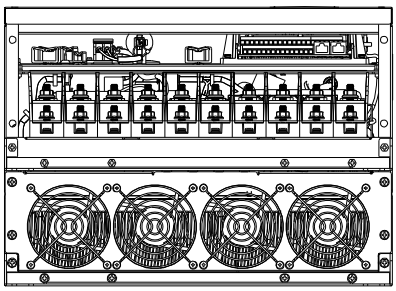

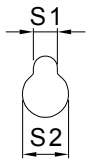


Detail A (Mounting Hole)

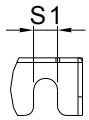


Detail B (Mounting Hole)

Unit: mm [inch]

| Frame | W | H | D | W1 | H1 | H2 | H3 | D1* | D2 | S1 | S2 | S3 |
|---|---|---|---|---|---|---|---|---|---|---|---|---|
| F1 | 420.0 [16.54] | - | 300.0 [11.81] | 380.0 [14.96] | 800.0 [31.50] | 770.0 [30.32] | 717.0 [28.23] | 124.0 [4.88] | 18.0 [0.71] | 13.0 [0.51] | 25.0 [0.98] | 18.0 [0.71] |

| Frame | Φ1 | Φ2 | Φ3 |
|---|---|---|---|
| F1 | - | - | - |

D1*: Flange mounting

Frame F

F2:

VFD1600CP43A-21; VFD1850CP43B-21; VFD1600CP63A-21; VFD2000CP63A-21

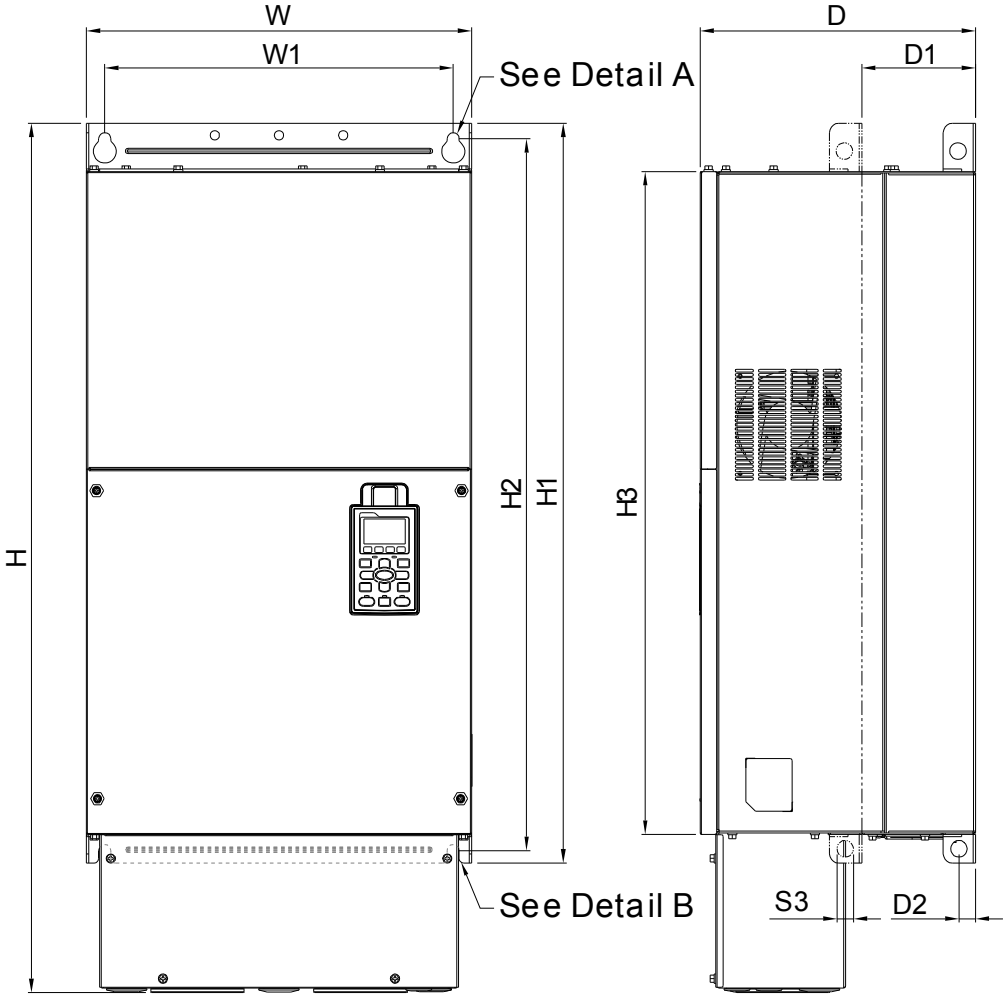


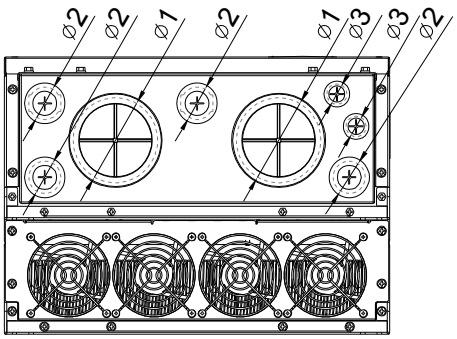


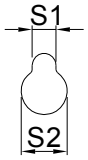


Detail A (Mounting Hole)

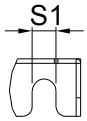


Detail B (Mounting Hole)

Unit: mm [inch]

| Frame | W | H | D | W1 | H1 | H2 | H3 | D1* | D2 | S1 | S2 | S3 |
|---|---|---|---|---|---|---|---|---|---|---|---|---|
| F2 | 420.0 [16.54] | 940.0 [37.00] | 300.0 [11.81] | 380.0 [14.96] | 800.0 [31.50] | 770.0 [30.32] | 717.0 [28.23] | 124.0 [4.88] | 18.0 [0.71] | 13.0 [0.51] | 25.0 [0.98] | 18.0 [0.71] |

| Frame | Φ1 | Φ2 | Φ3 |
|---|---|---|---|
| F2 | 92.0 [3.62] | 35.0 [1.38] | 22.0 [0.87] |

D1*: Flange mounting

Frame G

G1:

VFD2200CP43A-00; VFD2800CP43A-00; VFD2500CP63A-00; VFD3150CP63A-00

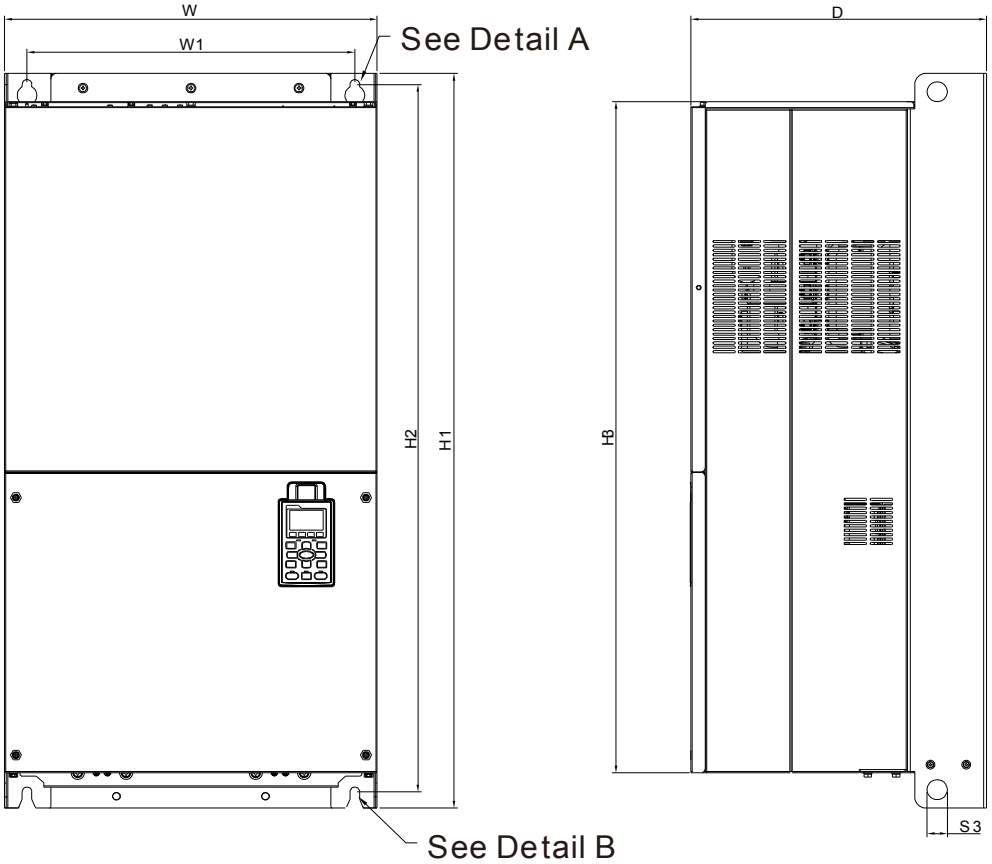


Unit: mm [inch]

| Frame | W | H | D | W1 | H1 | H2 | H3 | S1 | S2 | S3 | Φ1 | Φ2 | Φ3 |
|---|---|---|---|---|---|---|---|---|---|---|---|---|---|
| G1 | 500.0 [19.69] | - | 397.0 [15.63] | 440.0 [217.32] | 1000.0 [39.37] | 963.0 [37.91] | 913.6 [35.97] | 13.0 [0.51] | 26.5 [1.04] | 27.0 [1.06] | - | - | - |

Frame G

G2:

VFD2200CP43A-21; VFD2800CP43A-21; VFD2500CP63A-21; VFD3150CP63A-21

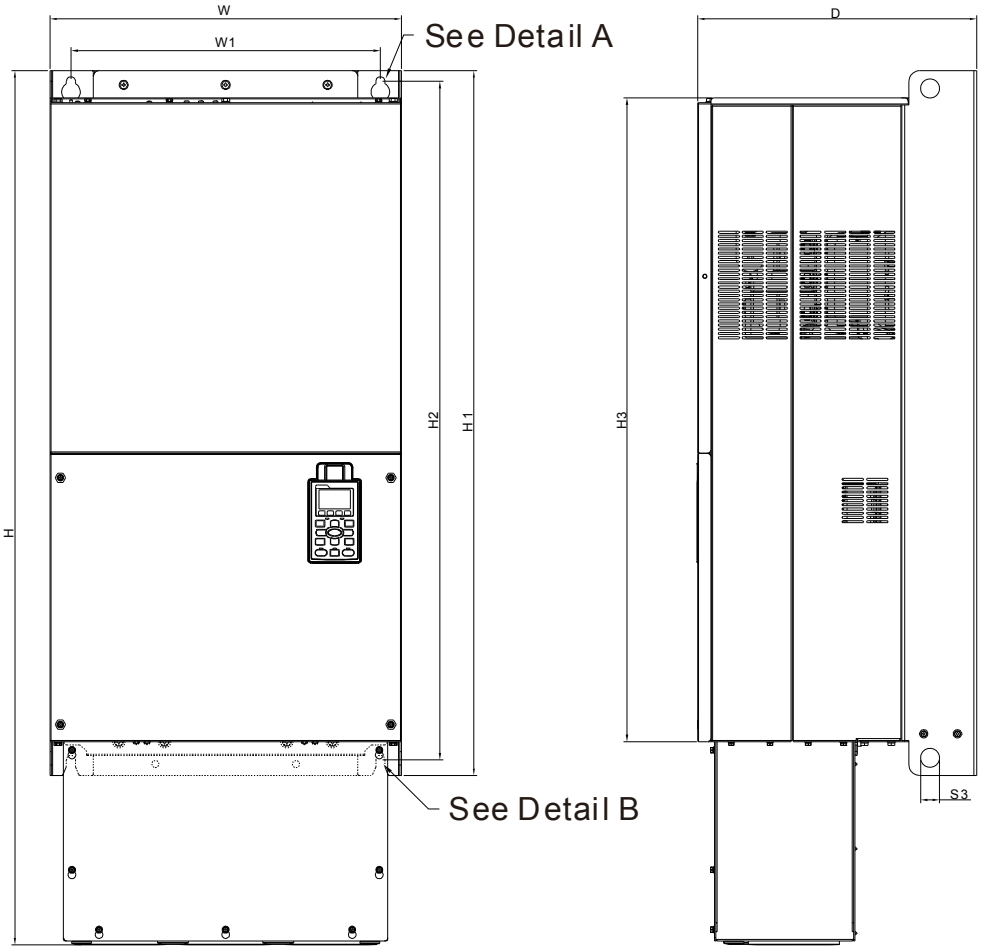


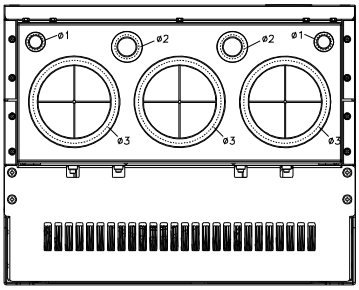


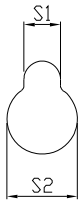


Detail A
(Mounting Hole)

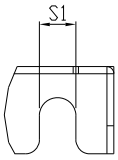


Detail B
(Mounting Hole)

Unit: mm [inch]

| Frame | W | H | D | W1 | H1 | H2 | H3 | S1 | S2 | S3 | Φ1 | Φ2 | Φ3 |
|---|---|---|---|---|---|---|---|---|---|---|---|---|---|
| G2 | 500.0 [19.69] | 1240.2 [48.83] | 397.0 [15.63] | 440.0 [217.32] | 1000.0 [39.37] | 963.0 [37.91] | 913.6 [35.97] | 13.0 [0.51] | 26.5 [1.04] | 27.0 [1.06] | 22.0 [0.87] | 34.0 [1.34] | 117.5 [4.63] |

## Frame H

H1:

VFD3150CP43A-00; VFD3550CP43A-00; VFD4000CP43A-00; VFD5000CP43A-00

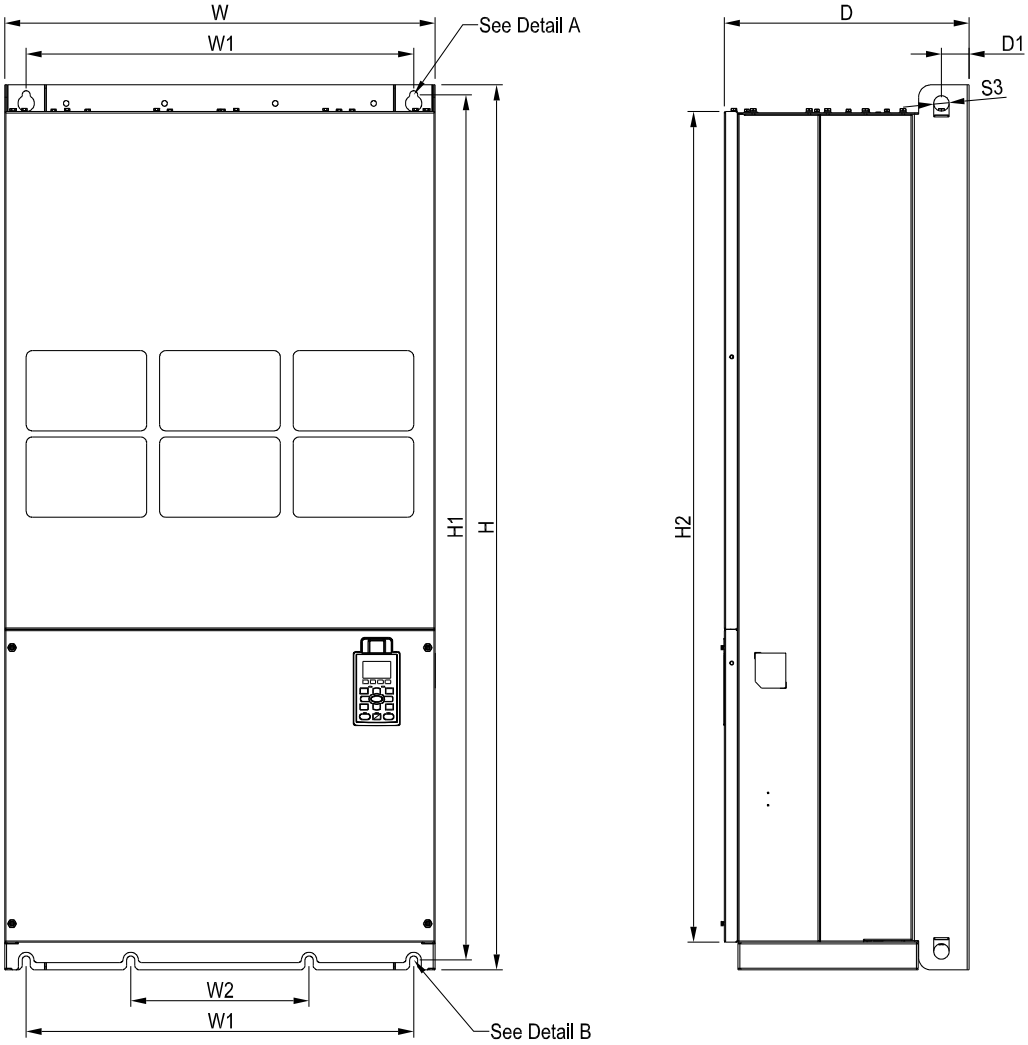


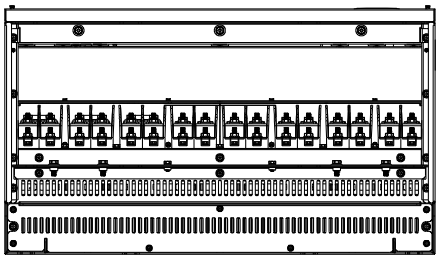

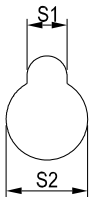


See Detail A(Mounting Hole)

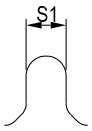


See Detail B(Mounting Hole)

Unit: mm [inch]

| Frame | W | H | D | W1 | W2 | W3 | W4 | W5 | W6 | H1 | H2 | H3 | H4 |
|---|---|---|---|---|---|---|---|---|---|---|---|---|---|
| H1 | 700.0 [27.56] | 1435.0 [56.5] | 398.0 [15.67] | 630.0 [24.8] | 290.0 [11.42] | - | - | - | - | 1403.0 [55.24] | 1346.6 [53.02] | - | - |
| Frame | H5 | D1 | D2 | D3 | D4 | D5 | D6 | S1 | S2 | S3 | Φ1 | Φ2 | Φ3 |
| H1 | - | 45.0 [1.77] | - | - | - | - | - | 13.0 [0.51] | 26.5 [1.04] | 25.0 [0.98] | - | - | - |

## Frame H

H2:

VFD3150CP43C-00; VFD3550CP43C-00; VFD4000CP43C-00; VFD5000CP43C-00

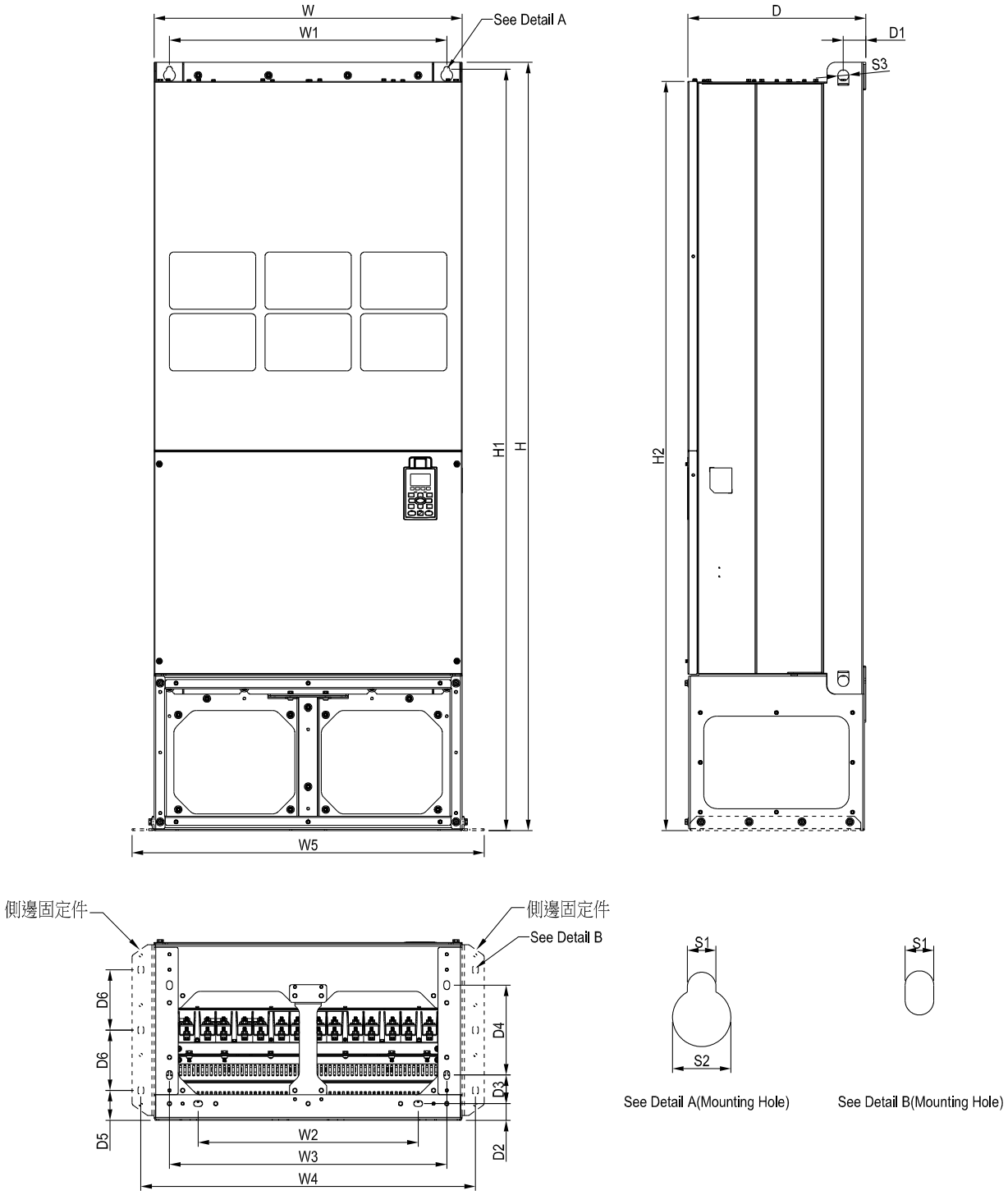


Unit: mm [inch]

| Frame | W | H | D | W1 | W2 | W3 | W4 | W5 | W6 | H1 | H2 | H3 | H4 |
|---|---|---|---|---|---|---|---|---|---|---|---|---|---|
| H2 | 700.0 [27.56] | 1745.0 [68.70] | 404.0 [15.90] | 630.0 [24.8] | 500.0 [19.69]- | 630.0 [24.80] | 760.0 [29.92] | 800.0 [31.5] | - | 1729.0 [68.07] | 1701.6 [66.99] | - | - |
| Frame | H5 | D1 | D2 | D3 | D4 | D5 | D6 | S1 | S2 | S3 | Φ1 | Φ2 | Φ3 |
| H2 | - | 51.0 [2.00] | 38.0 [1.50] | 65.0 [2.56] | 204.0 [8.03] | 68.0 [2.68] | 137.0 [5.40] | 13.0 [0.51] | 26.5 [1.04] | 25.0 [0.98] | - | - | - |

## Frame H

H3:

VFD3150CP43C-21; VFD3550CP43C-21; VFD4000CP43C-21; VFD5000CP43C-21

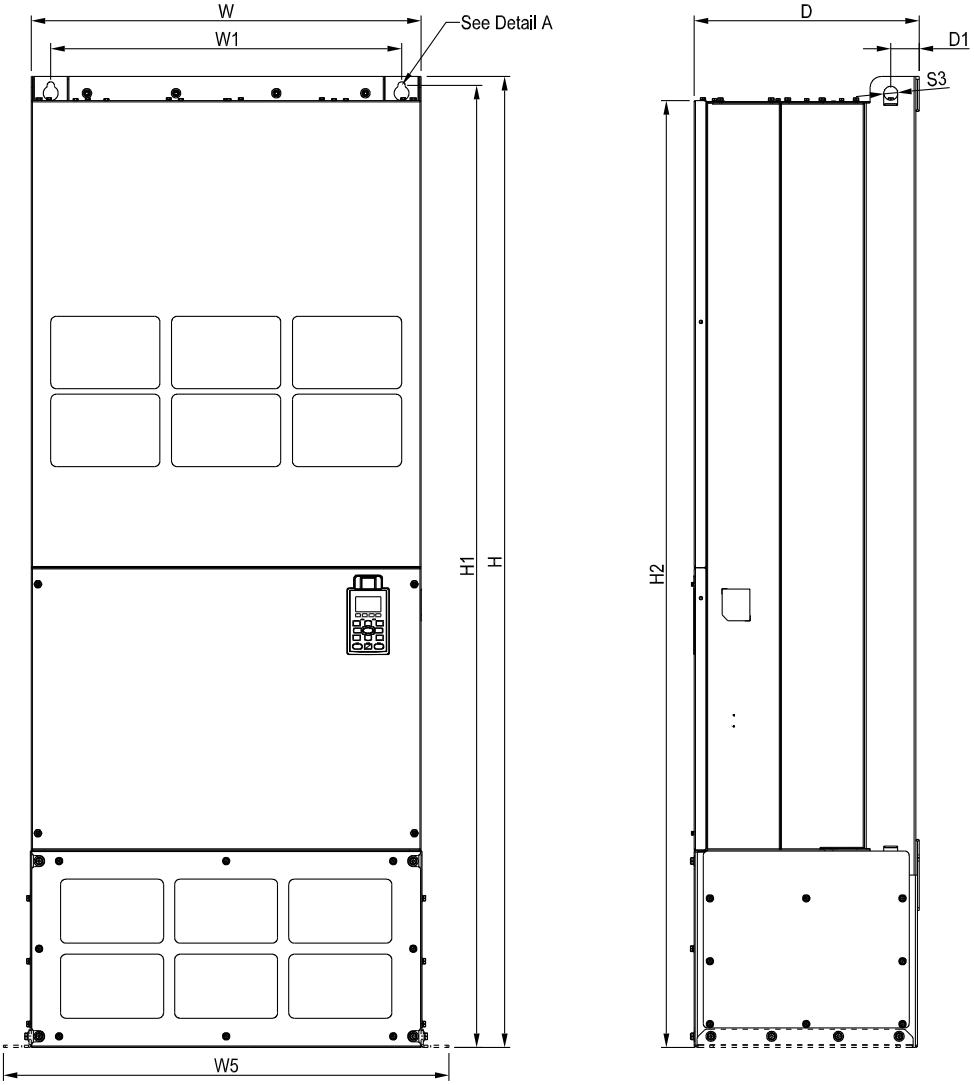


Unit：mm [inch]

| Frame | W | H | D | W1 | W2 | W3 | W4 | W5 | W6 | H1 | H2 | H3 | H4 |
|---|---|---|---|---|---|---|---|---|---|---|---|---|---|
| H3 | 700.0 [27.56] | 1745.0 [68.70] | 404.0 [15.91] | 630.0 [24.80] | 500.0 [19.69] | 630.0 [24.80] | 760.0 [29.92] | 800.0 [31.5] | - | 1729.0 [68.07] | 1701.6 [66.99] | - | - |
| Frame | H5 | D1 | D2 | D3 | D4 | D5 | D6 | S1 | S2 | S3 | Φ1 | Φ2 | Φ3 |
| H3 | - | 51.0 [2.00] | 38.0 [1.50] | 65.0 [2.56] | 204.0 [8.03] | 68.0 [2.68] | 137.0 [5.40] | 13.0 [0.51] | 26.5 [1.04] | 25.0 [0.98] | 22.0 [0.87] | 34.0 [1.34] | 117.5 [4.63] |

690V

Frame H

H1:

VFD4000CP63A-00; VFD4500CP63A-00; VFD5600CP63A-00; VFD6300CP63A-00

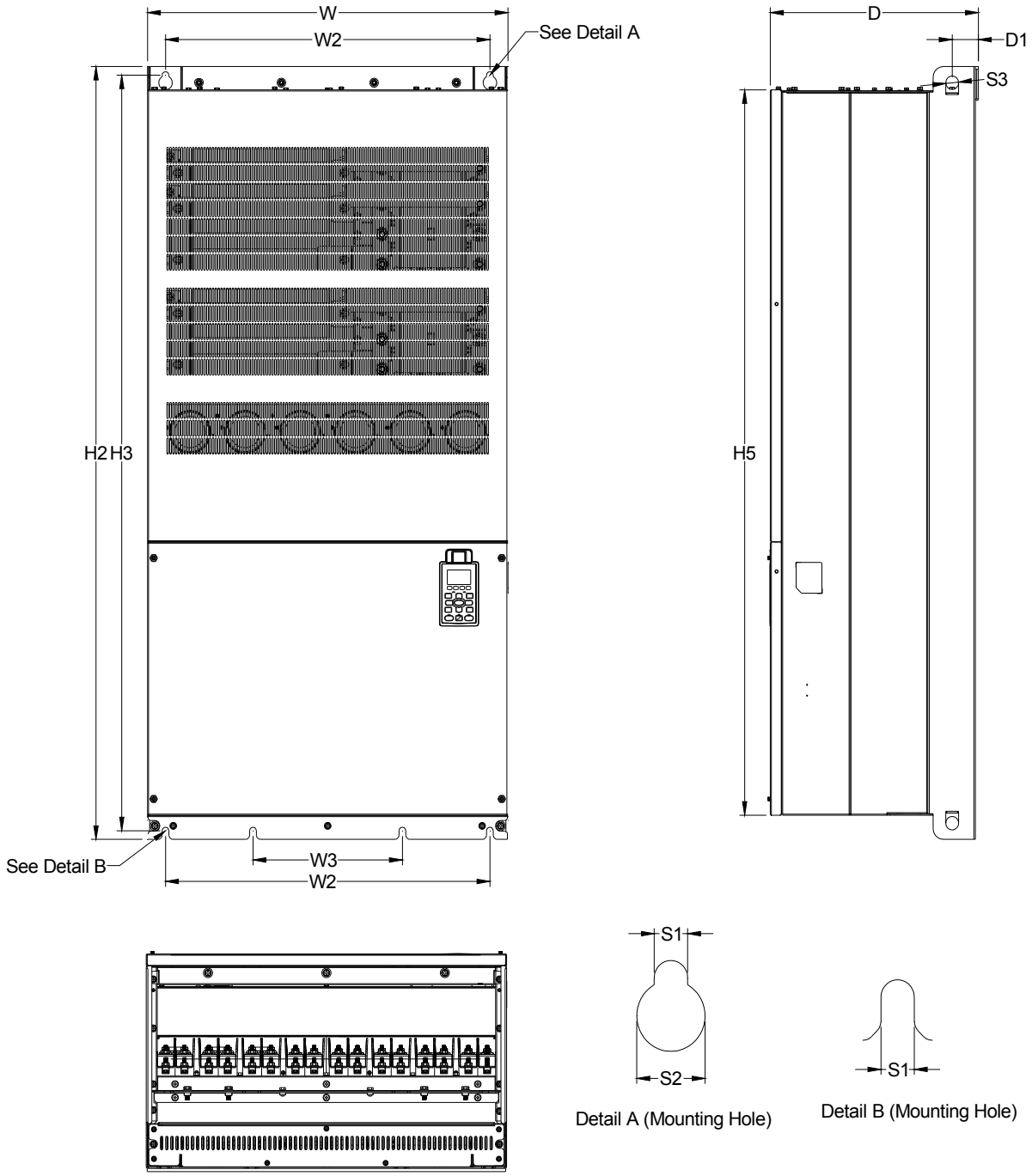


Unit: mm [inch]

| Frame | W | W2 | W3 | H2 | H3 | H5 | D | D1 | S1 | S2 | S3 |
|---|---|---|---|---|---|---|---|---|---|---|---|
| H1 | 700.0 [27.56] | 630.0 [24.80] | 290.0 [11.42] | 1435.2 [56.50] | 1403.0 [55.24] | 1346.6 [53.02] | 404.0 [15.91] | 51.0 [2.01] | 13.0 [0.51] | 26.5 [1.04] | 25.0 [0.98] |

690V

Frame H

H2:

VFD4000CP63A-21; VFD4500CP63A-21; VFD5600CP63A-21; VFD6300CP63A-21

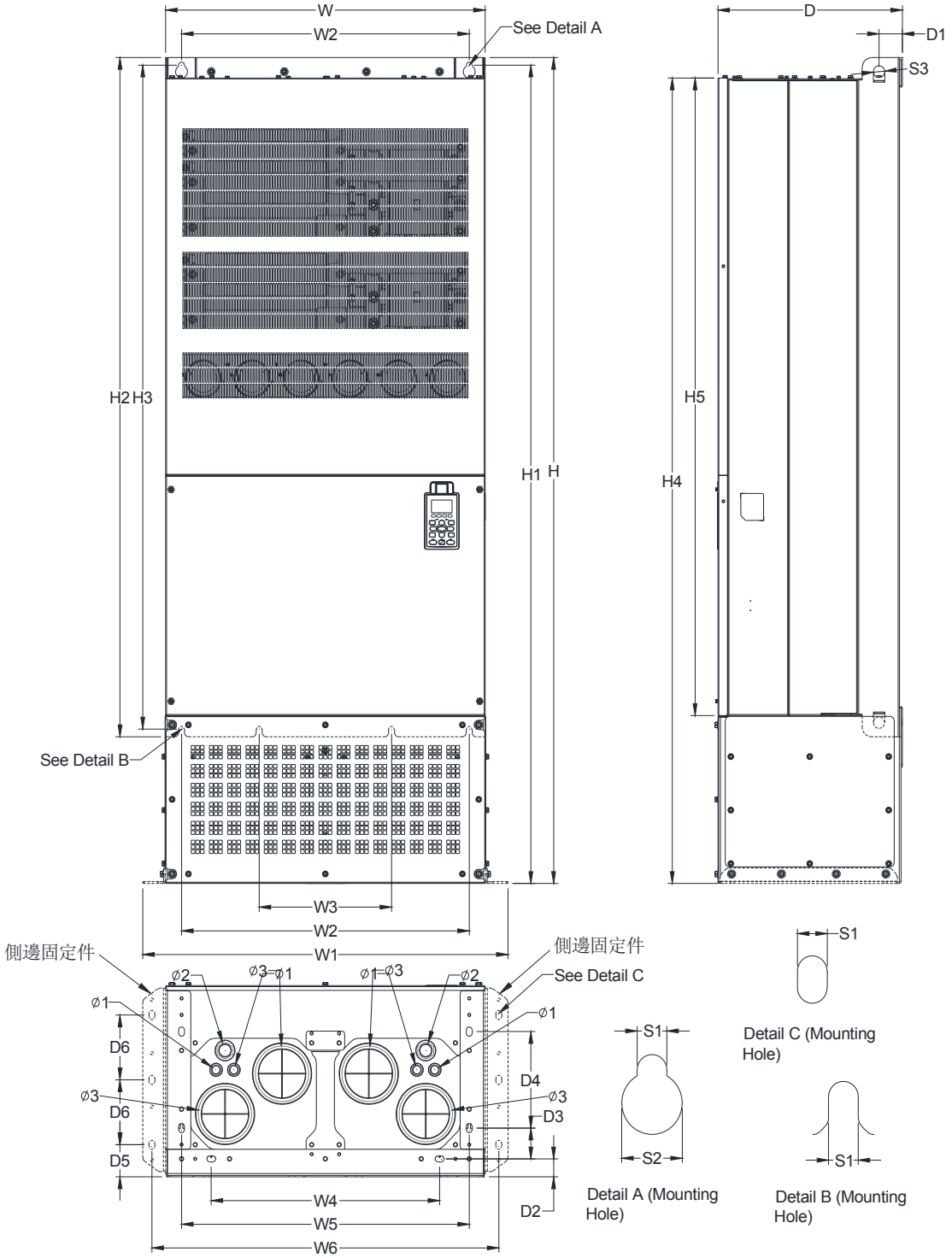


Unit: mm [inch]

| Frame | W | H | D | W1 | W2 | W3 | W4 | W5 | W6 | H1 | H2 | H3 | H4 |
|---|---|---|---|---|---|---|---|---|---|---|---|---|---|
| H2 | 700.0 [27.56] | 1745.0 [68.70] | 404.0 [15.91] | 800.0 [31.50] | - | - | 500.0 [19.69] | 630.0 [24.80] | 760.0 [29.92] | 1729.0 [68.07] | - | - | 1701.6 [66.99] |
| Frame | H5 | D1 | D2 | D3 | D4 | D5 | D6 | S1 | S2 | S3 | Φ1 | Φ2 | Φ3 |
| H2 | 1346.6 [53.02] | 51.0 [2.00] | 38.0 [1.50] | 65.0 [2.56] | 204.0 [8.03] | 68.0 [2.68] | 137.0 [5.40] | 13.0 [0.51] | 26.5 [1.04] | 25.0 [0.98] | 22.0 [0.87] | 34.0 [1.34] | 117.5 [4.63] |

## Digital Keypad

KPC-CC01

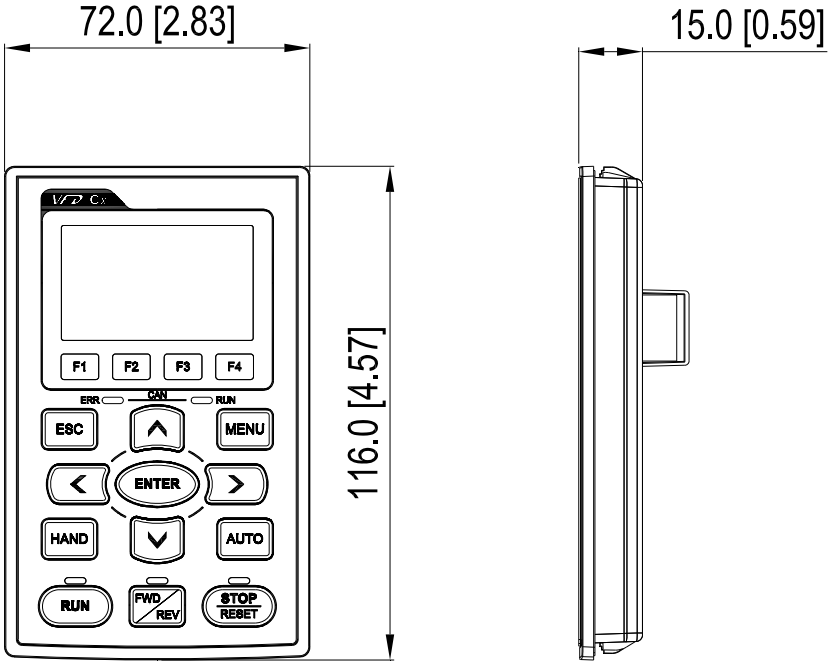

# *Chapter 2 Installation*

## Mounting Clearance

- ☑ Prevent fiber particles, scraps of paper, shredded wood saw dust, metal particles, etc. from adhering to the heat sink.
- ☑ Install the AC motor drive in a metal cabinet. When installing one drive below another one, use a metal separation between the AC motor drives to prevent mutual heating and to prevent the risk of fire accident.
- ☑ Install the AC motor drive in Pollution Degree 2 environments only: normally only nonconductive pollution occurs and temporary conductivity caused by condensation is expected.

The appearances shown in the following figures are for reference only.

Airflow direction: Inflow Outflow Distance

Single drive installation(Frame A~H)

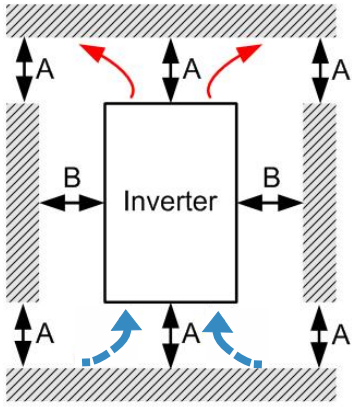


Figure 2-1

Side-by-side horizontal installation (Frame A~C)

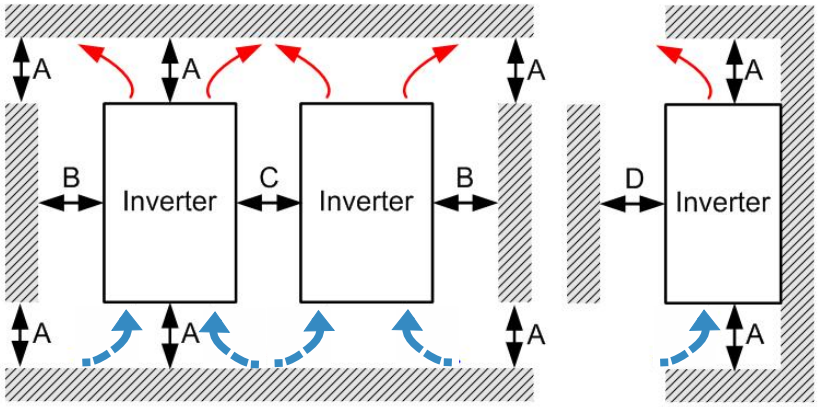


Figure 2-2

Multiple drives, single side-by-side horizontal installation (Frame G, H)

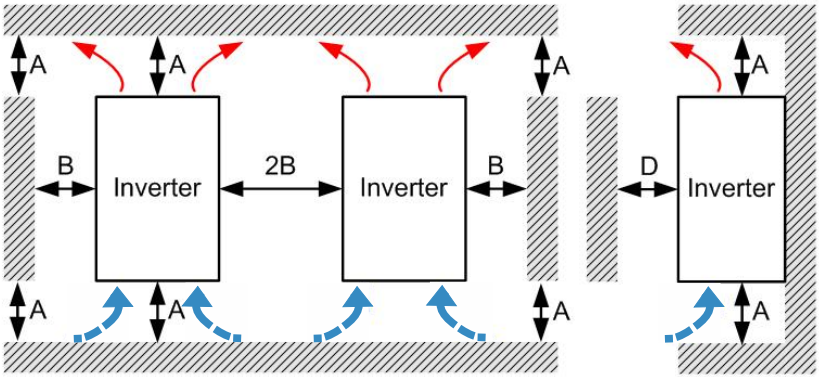


Figure 2-3

Multiple drives, side-by-side installation (Frame D0, D, E, F)

Install metal separation between the drives.

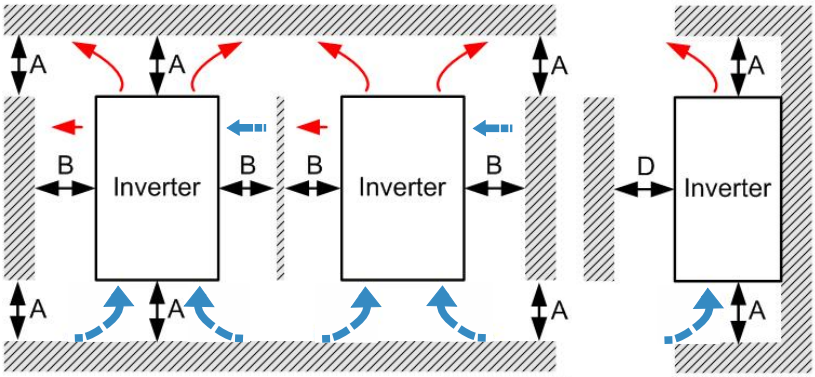


Figure 2-4

Multiple drives side-by-side vertical installation (Frame A~H )

Ta: Frame A~G Ta*: Frame H

When installing one AC motor drive below another one (top-bottom installation), use a metal separation between the drives to prevent mutual heating. The temperature measured at the fan's inflow side must be lower than the temperature measured at the operation side. If the fan's inflow temperature is higher, use a thicker or larger size of metal separator. Operation temperature is the temperature measured at 50 mm away from the fan's inflow side. (As shown in the figure below)

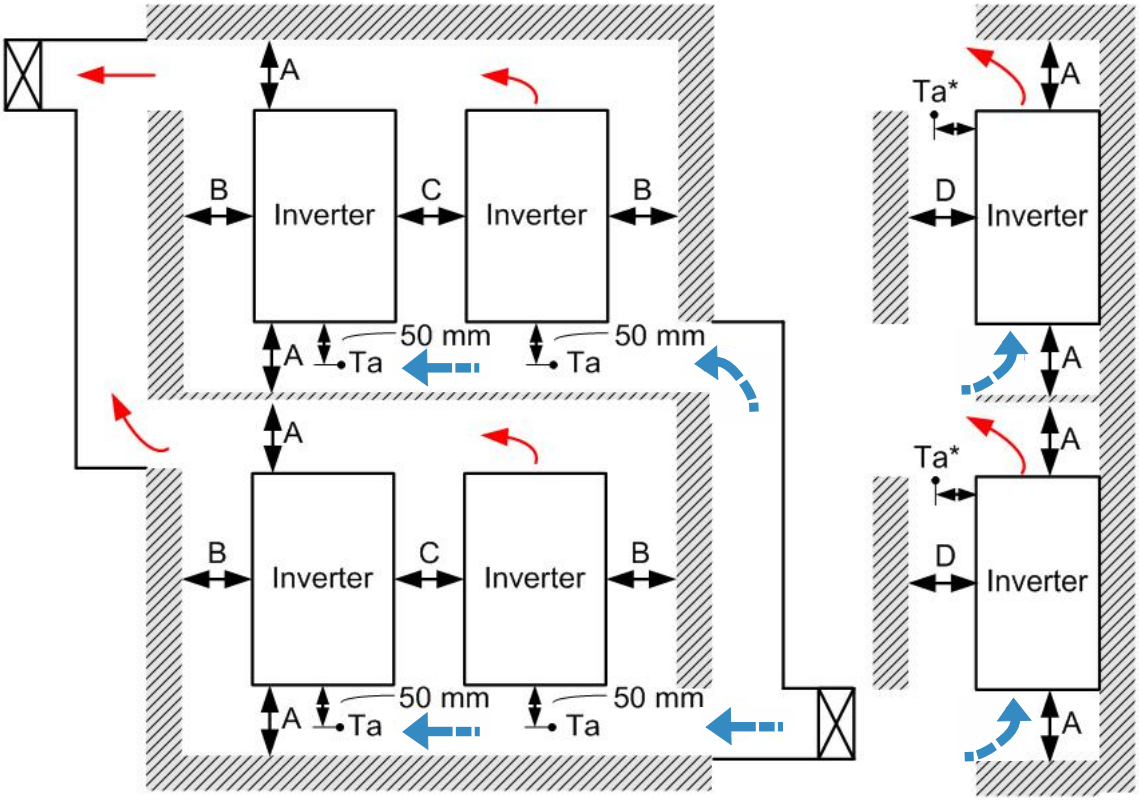


Figure 2-5

Minimum mounting clearance

| Frame | A (mm) | B (mm) | C (mm) | D (mm) |
|---|---|---|---|---|
| A~C | 60 | 30 | 10 | 0 |
| D0~F | 100 | 50 | - | 0 |
| G | 200 | 100 | - | 0 |
| H | 350 | 0 | 0 | 200 (100, Ta=Ta*=50℃) |

Table 2-1

| | |
|---|---|
| Frame A | VFD007CP23A-21; VFD007CP43A/4EA-21; VFD015CP23A-21; VFD015CP43B/4EB-21; VFD022CP23A-21; VFD022CP43B/4EB-21; VFD037CP23A-21; VFD037CP43B/4EB-21; VFD040CP43A/4EA-21; VFD055CP23A-21; VFD055CP43B/4EB-21; VFD075CP43B/4EB-21; VFD015CP53A-21; VFD022CP53A-21; VFD037CP53A-21 |
| Frame B | VFD075CP23A-21; VFD110CP23A-21; VFD110CP43B/4EB -21; VFD150CP23A-21; VFD150CP43B/4EB -21; VFD185CP43B/4EB -21; VFD055CP53A-21; VFD075CP53A-21; VFD110CP53A-21; VFD150CP53A-21 |
| Frame C | VFD185CP23A-21; VFD220CP23A-21; VFD220CP43A/4EA -21; VFD300CP23A-21; VFD300CP43B/4EB -21; VFD370CP43B/4EB -21; VFD185CP63A-21; VFD220CP63A-21; VFD300CP63A-21; VFD370CP63A-21 |
| Frame D0 | VFD450CP43S-00; VFD550CP43S-00; VFD450CP43S-21; VFD550CP43S-21 |
| Frame D | VFD370CP23A-00/23A-21; VFD450CP23A-00/23A-21; VFD750CP43B-00/43B-21; VFD900CP43A-00/43A-21; VFD450CP63A-00/63A-21; VFD550CP63A-00/63A-21; |
| Frame E | VFD550CP23A-00/23A-21; VFD750CP23A-00/23A-21; VFD900CP23A-00/23A-21; VFD1100CP43A-00/43A-21; VFD1320CP43B-00/43B-21; VFD750CP63A-00/63A-21; VFD900CP63A-00/63A-21; VFD1100CP63A-00/63A-21; VFD1320CP63A-00/63A-21; |
| Frame F | VFD1600CP43A-00/43A-21; VFD1850CP43B-00/43B-21; VFD1600CP63A-00/63A-21; VFD2000CP63A-00/63A-21 |
| Frame G | VFD2200CP43A-00/43A-21; VFD2800CP43A-00/43A-21; VFD2500CP63A-00/63A-21; VFD3150CP63A-00/63A-21 |
| Frame H | VFD3150CP43A-00/43C-00/43C-21; VFD3550CP43A-00/43C-00/43C-21; VFD4000CP43A-00/43C-00/43C-21; VFD5000CP43A-00/43C-00/43C-21; VFD4000CP63A-00/63A-21; VFD4500CP63A-00/63A-21; VFD5600CP63A-00/63A-21; VFD6300CP63A-00/63A-21 |

Table 2-2

**NOTE**

The minimum mounting clearances A~D stated in the table above applies to AC motor drives installation. Failing to follow the minimum mounting clearances may cause the fan to malfunction and heat dissipation problems.

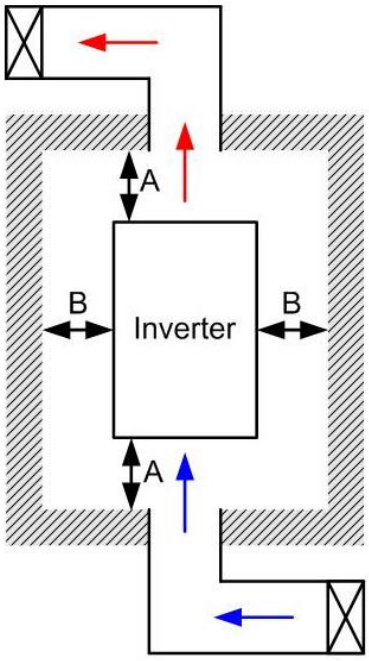


Figure 2-6

**NOTE**

※ The mounting clearances stated in the figure are for installing the drive in an open area. To install the drive in a confined space (such as cabinet or electric box), please follow the following three rules: (1) Keep the minimum mounting clearances. (2) Install a ventilation equipment or an air conditioner to keep surrounding temperature lower than operation temperature. (3) Refer to parameter setting and set up Pr. 00-16, Pr.00-17, and Pr. 06-55.

※ The following table shows the heat dissipation and the required air volume when installing a single drive in a confined space. When installing multiple drives, the required air volume shall be multiplied by the number the drives.

※ Refer to the chart (Air flow rate for cooling) for ventilation equipment design and selection.

※ Refer to the chart (Power dissipation) for air conditioner design and selection.

※ Different control mode will affect the derating. See Pr06-55 for more information.

※ Ambient temperature derating curve shows the derating status in different temperature in relation to different protection level.

※ If UL Type 1 models need side by side installation, please remove top cover of Frame A~C, and please do not install conduit box of Frame D and above.

※ Suitable for Installation in a Compartment Handling Conditioned Air (Plenum).

| Air flow rate for cooling | | | | | | | Power Dissipation | | |
|---|---|---|---|---|---|---|---|---|---|
| Model No. | Flow Rate (cfm) | | | Flow Rate ($m^3$/hr) | | | Power Dissipation (watt) | | |
| | External | Internal | Total | External | Internal | Total | Loss External (Heat Sink) | Internal | Total |
| VFD007CP23A-21 | - | - | - | - | - | - | 40 | 31 | 71 |
| VFD015CP23A-21 | - | - | - | - | - | - | 61 | 39 | 100 |
| VFD022CP23A-21 | 14 | - | 14 | 24 | - | 24 | 81 | 45 | 126 |

| Air flow rate for cooling | | | | | | | Power Dissipation | | |
|---|---|---|---|---|---|---|---|---|---|
| VFD037CP23A-21 | 14 | - | 14 | 24 | - | 24 | 127 | 57 | 184 |
| VFD055CP23A-21 | 10 | - | 10 | 17 | - | 17 | 158 | 93 | 251 |
| VFD075CP23A-21 | 40 | 14 | 54 | 68 | 24 | 92 | 291 | 101 | 392 |
| VFD110CP23A-21 | 66 | 14 | 80 | 112 | 24 | 136 | 403 | 162 | 565 |
| VFD150CP23A-21 | 58 | 14 | 73 | 99 | 24 | 124 | 570 | 157 | 727 |
| VFD185CP23A-21 | 166 | 12 | 178 | 282 | 20 | 302 | 622 | 218 | 840 |
| VFD220CP23A-21 | 166 | 12 | 178 | 282 | 20 | 302 | 777 | 197 | 974 |
| VFD300CP23A-21 | 146 | 12 | 158 | 248 | 20 | 268 | 878 | 222 | 1100 |
| VFD370CP23A-00/ VFD370CP23A-21 | 179 | 30 | 209 | 304 | 51 | 355 | 1271 | 311 | 1582 |
| VFD450CP23A-00/ VFD450CP23A-21 | 179 | 30 | 209 | 304 | 51 | 355 | 1550 | 335 | 1885 |
| VFD550CP23A-00/ VFD550CP23A-21 | 228 | 73 | 301 | 387 | 124 | 511 | 1762 | 489 | 2251 |
| VFD750CP23A-00/ VFD750CP23A-21 | 228 | 73 | 301 | 387 | 124 | 511 | 2020 | 574 | 2594 |
| VFD900CP23A-00/ VFD900CP23A-21 | 246 | 73 | 319 | 418 | 124 | 542 | 2442 | 584 | 3026 |
| VFD007CP43A/ VFD007CP4EA-21 | - | - | - | - | - | - | 35 | 32 | 67 |
| VFD015CP43B/ VFD015CP4EB-21 | - | - | - | - | - | - | 48 | 39 | 87 |
| VFD022CP43B/ VFD022CP4EB-21 | - | - | - | - | - | - | 64 | 52 | 116 |
| VFD037CP43B/ VFD037CP4EB-21 | 14 | - | 14 | 24 | - | 24 | 103 | 77 | 180 |
| VFD040CP43A/ VFD040CP4EA-21 | 10 | - | 10 | 17 | - | 17 | 124 | 81 | 205 |
| VFD055CP43B/ VFD055CP4EB-21 | 10 | - | 10 | 17 | - | 17 | 142 | 116 | 258 |
| VFD075CP43B/ VFD075CP4EB-21 | 10 | - | 10 | 17 | - | 17 | 205 | 129 | 334 |
| VFD110CP43B/ VFD110CP4EB-21 | 40 | 14 | 54 | 68 | 24 | 92 | 291 | 175 | 466 |
| VFD150CP43B/ VFD150CP4EB-21 | 66 | 14 | 80 | 112 | 24 | 136 | 376 | 190 | 566 |
| VFD185CP43B/ VFD185CP4EB-21 | 58 | 14 | 73 | 99 | 24 | 124 | 396 | 210 | 606 |
| VFD220CP43A/ VFD220CP4EA-21 | 99 | 21 | 120 | 168 | 36 | 204 | 455 | 358 | 813 |
| VFD300CP43B/ VFD300CP4EB-21 | 99 | 21 | 120 | 168 | 36 | 204 | 586 | 410 | 996 |
| VFD370CP43B/ VFD370CP4EB-21 | 126 | 21 | 147 | 214 | 36 | 250 | 778 | 422 | 1200 |
| VFD450CP43S-00/ VFD450CP43S-21 | 179 | 30 | 209 | 304 | 51 | 355 | 1056 | 459 | 1515 |
| VFD550CP43S-00/ VFD550CP43S-21 | 179 | 30 | 209 | 304 | 51 | 355 | 1163 | 669 | 1832 |
| VFD750CP43B-00/ VFD750CP43B-21 | 179 | 30 | 209 | 304 | 51 | 355 | 1407 | 712 | 2119 |
| VFD900CP43A-00/ VFD900CP43A-21 | 186 | 30 | 216 | 316 | 51 | 367 | 1787 | 955 | 2742 |
| VFD1100CP43A-00/ VFD1100CP43A-21 | 257 | 73 | 330 | 437 | 124 | 561 | 2112 | 1084 | 3196 |
| VFD1320CP43B-00/ VFD1320CP43B-21 | 223 | 73 | 296 | 379 | 124 | 503 | 2597 | 1220 | 3817 |
| VFD1600CP43A-00/ VFD1600CP43A-21 | 224 | 112 | 336 | 381 | 190 | 571 | 3269 | 1235 | 4504 |
| VFD1850CP43B-00/ VFD1850CP43B-21 | 289 | 112 | 401 | 491 | 190 | 681 | 3814 | 1570 | 5384 |
| VFD2200CP43A-00/ VFD2200CP43A-21 | | | 454 | | | 771 | | | 6358 |

| Air flow rate for cooling | | | | | | | Power Dissipation | | |
|---|---|---|---|---|---|---|---|---|---|
| VFD2800CP43A-00/<br>VFD2800CP 43A-21 | | | 454 | | | 771 | | | 7325 |
| VFD3150CP43A-00/<br>VFD3150CP43C-00/<br>VFD3150CP43C-21 | | | 769 | | | 1307 | | | 8513 |
| VFD3550CP43A-00/<br>VFD3550CP43C-00/<br>VFD3550CP43C-21 | | | 769 | | | 1307 | | | 9440 |
| VFD4000CP43A-00/<br>VFD4000CP43C-00/<br>VFD4000CP43C-21 | | | 769 | | | 1307 | | | 10642 |
| VFD5000CP43A-00/<br>VFD5000CP43C-00/<br>VFD5000CP43C-21 | | | 769 | | | 1307 | | | 13364 |
| VFD015CP53A-21 | - | - | - | - | - | - | 39.5 | 13.0 | 53 |
| VFD022CP53A-21 | - | - | - | - | - | - | 55.0 | 22.0 | 77 |
| VFD037CP53A-21 | 0.006 | - | 0.006 | 13.6 | - | 13.6 | 86.8 | 42.7 | 130 |
| VFD055CP53A-21 | 0.019 | 0.007 | 0.026 | 40.0 | 14.5 | 54.5 | 124.6 | 67.9 | 193 |
| VFD075CP53A-21 | 0.019 | 0.007 | 0.026 | 40.0 | 14.5 | 54.5 | 143.5 | 119.0 | 263 |
| VFD110CP53A-21 | 0.019 | 0.007 | 0.026 | 40.0 | 14.5 | 54.5 | 222.2 | 162.8 | 385 |
| VFD150CP53A-21 | 0.019 | 0.007 | 0.026 | 40.0 | 14.5 | 54.5 | 308.5 | 216.5 | 525 |
| VFD185CP63A-21 | 90.0 | 21.3 | 111.4 | 153.0 | 36.2 | 189.2 | 317.5 | 145.0 | 462.5 |
| VFD220CP63A-21 | 90.0 | 21.3 | 111.4 | 153.0 | 36.2 | 189.2 | 408.2 | 141.8 | 550.0 |
| VFD300CP63A-21 | 90.0 | 21.3 | 111.4 | 153.0 | 36.2 | 189.2 | 492.7 | 257.3 | 750.0 |
| VFD370CP63A-21 | 89.0 | 21.3 | 110.3 | 151.2 | 36.2 | 187.5 | 641.6 | 283.4 | 925.0 |
| VFD450CP63A-00/21 | 175.9 | 36.4 | 212.3 | 298.8 | 61.8 | 360.6 | 718.2 | 406.8 | 1125.0 |
| VFD550CP63A-00/21 | 175.9 | 36.4 | 212.3 | 298.8 | 61.8 | 360.6 | 890.1 | 484.9 | 1375.0 |
| VFD750CP63A-00/21 | 264.6 | 90.6 | 355.2 | 449.6 | 153.9 | 603.5 | 1356.0 | 519.0 | 1875.0 |
| VFD900CP63A-00/21 | 264.6 | 90.6 | 355.2 | 449.6 | 153.9 | 603.5 | 1652.8 | 597.2 | 2250.0 |
| VFD1100CP63A-00/21 | 264.6 | 90.6 | 355.2 | 449.6 | 153.9 | 603.5 | 1960.3 | 789.7 | 2750.0 |
| VFD1320CP63A-00/21 | 264.6 | 90.6 | 355.2 | 449.6 | 153.9 | 603.5 | 2230.8 | 1069.2 | 3300.0 |
| VFD1600CP63A-00/21 | 248.1 | 135.3 | 383.4 | 421.6 | 229.9 | 651.4 | 2627.3 | 1372.7 | 4000.0 |
| VFD2000CP63A-00/21 | 248.1 | 135.3 | 383.4 | 421.6 | 229.9 | 651.4 | 3415.0 | 1585.0 | 5000.0 |
| VFD2500CP63A-00/21 | | | 409.7 | | | 696.0 | 4751.7 | 1498.3 | 6250.0 |
| VFD3150CP63A-00/21 | | | 409.7 | | | 696.0 | 5695.4 | 2179.6 | 7875.0 |
| VFD4000CP63A-00/21 | | | 563.0 | | | 956.4 | 6796.2 | 3203.8 | 10000.0 |
| VFD4500CP63A-00/21 | | | 952.9 | | | 1618.9 | 7313.6 | 3936.4 | 11250.0 |
| VFD5600CP63A-00/21 | | | 952.9 | | | 1618.9 | 9553.4 | 4446.6 | 14000.0 |
| VFD6300CP63A-00/21 | | | 952.9 | | | 1618.9 | 11042.4 | 4707.6 | 15750.0 |

※ The required airflow shown in chart is for installing single drive in a confined space.

※ When installing the multiple drives, the required air volume should be the required air volume for single drive X the number of the drives.

※ The heat dissipation shown in the chart is for installing single drive in a confined space.

※ When installing the multiple drives, volume of heat dissipation should be the heat dissipated for single drive X the number of the drives.

※ Heat dissipation for each model is calculated by rated voltage, current and default carrier.

[The page intentionally left blank]

# *Chapter 3 Unpacking*

3-1 Unpacking

3-2 The Lifting Hook

The AC motor drive should be kept in the shipping carton or crate before installation. In order to retain the warranty coverage, the AC motor drive should be stored properly when it is not to be used for an extended period of time.

## 3-1 Unpacking

The AC motor drive is packed in the crate. Follows the following step for unpack:

| Frame D | |
|---|---|
| Crate 01 (VFDXXXCPXXX-00)<br>Loosen the 12 cover screws to open the crate.<br> 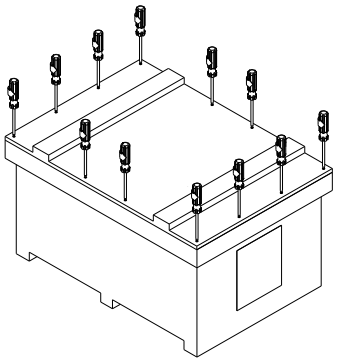 | Crate 02 (VFDXXXCPXXX-21)<br>Loosen all of the screws on the 4 iron plates at the four bottom corners of the crate. 4 screws on each of the iron plate (total 16 screws).<br> 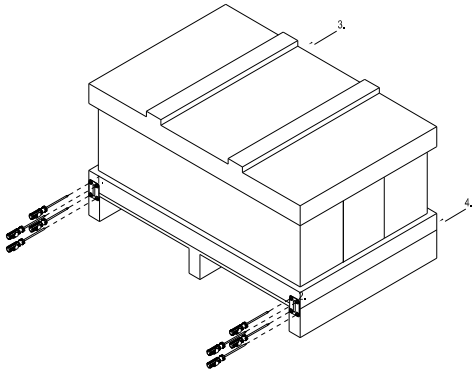 |
| Remove the EPEs and manual.<br> 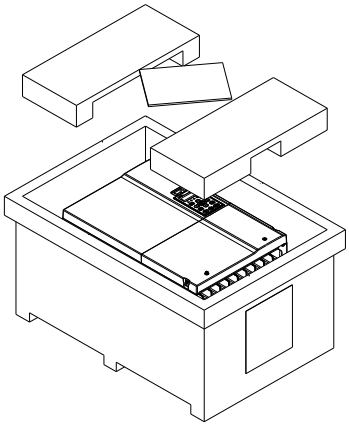 | Remove the crate cover, EPEs, rubber and manual.<br> 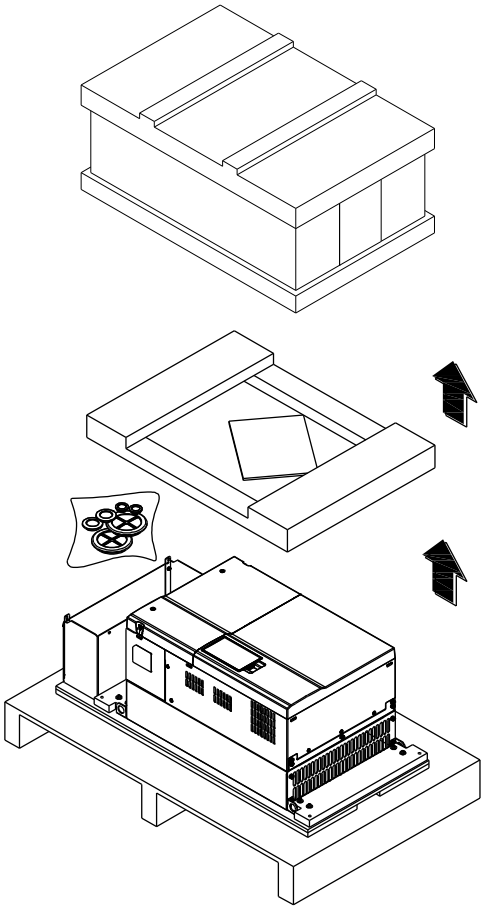 |
| Loosen the 8 screws that fastened on the pallet, remove the wooden plate.<br> 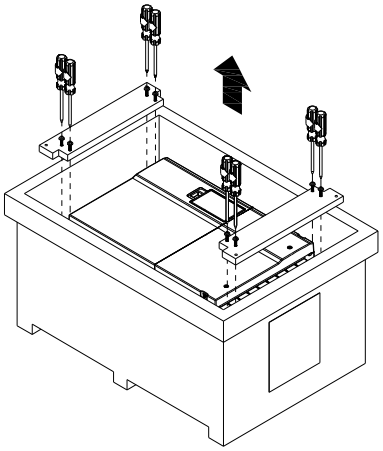 | |

Lift the drive by hooking the lifting hole. It is now ready for installation.

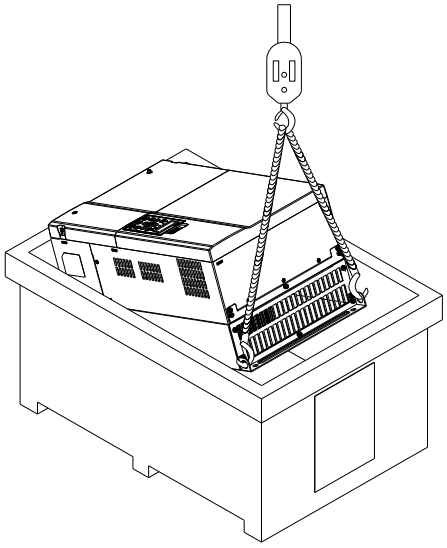

Loosen the 10 screws on the pallet, remove the wooden plate.

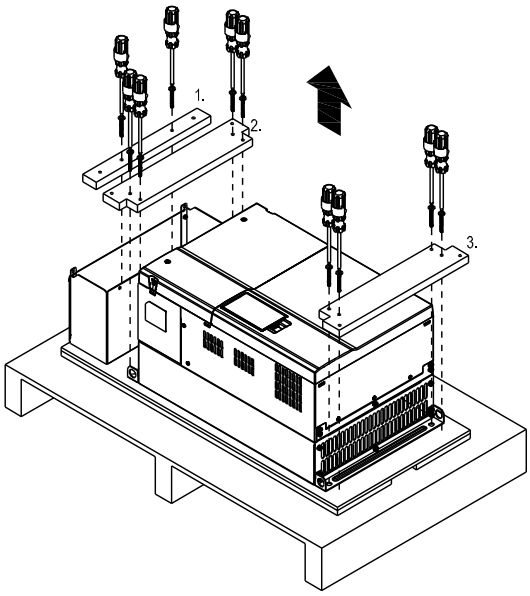


Lift the drive by hooking the lifting hole. It is now ready for installation.

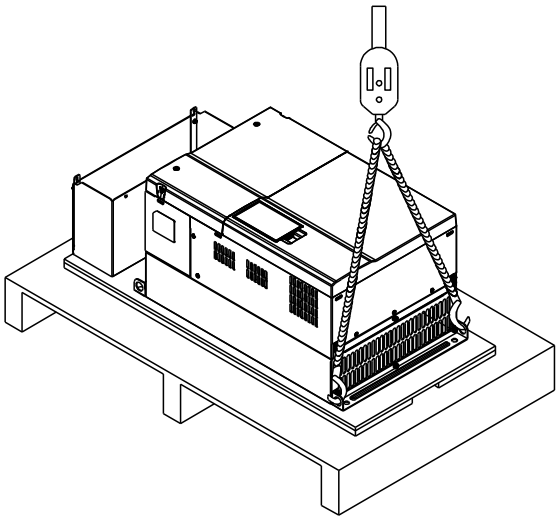

## Frame E

### Crate 01 (VFDXXXXCPXXX-00)

Loosen the 4 screws on the iron plates. There are 4 iron plates and in total of 16 screws.

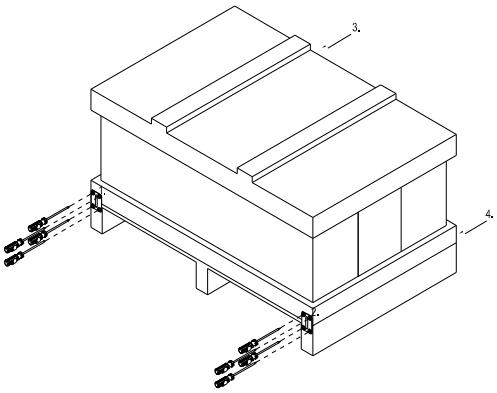


### Crate 02 (VFDXXXXCPXXX-21)

Loosen the 4 screws on the iron plates. There are 4 iron plates and in total of 16 screws.

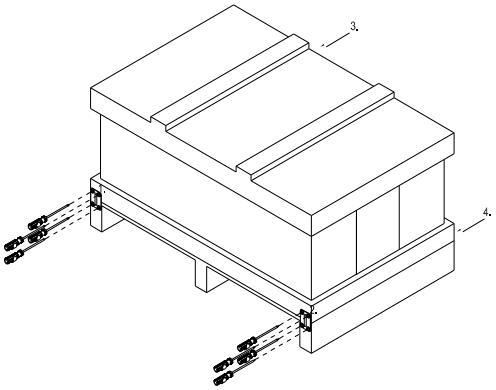

| | |
|---|---|
| Remove the crate cover, EPEs and manual.<br> 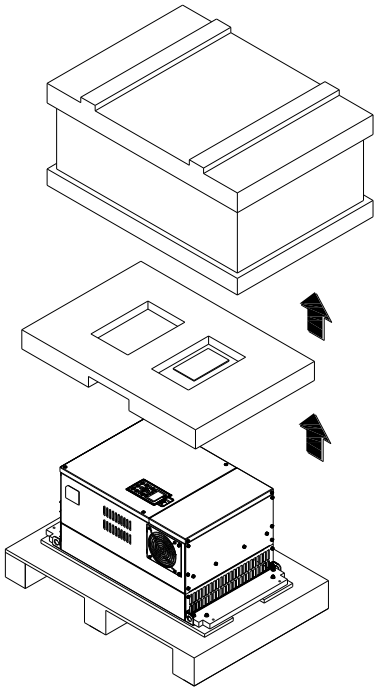 | Remove the crate, EPEs, rubbers and manual.<br> 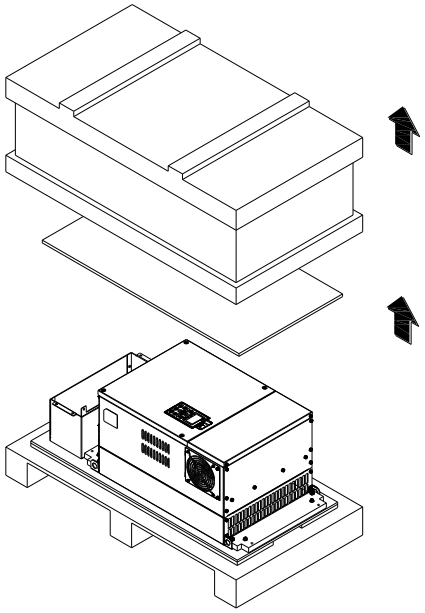 |
| Loosen the 8 screws on the pallet as shown in the following figure.<br> 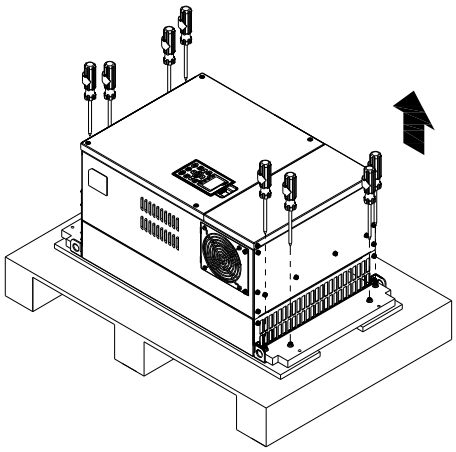 | Loosen the 10 screws on the pallet and remove the wooden plate.<br> 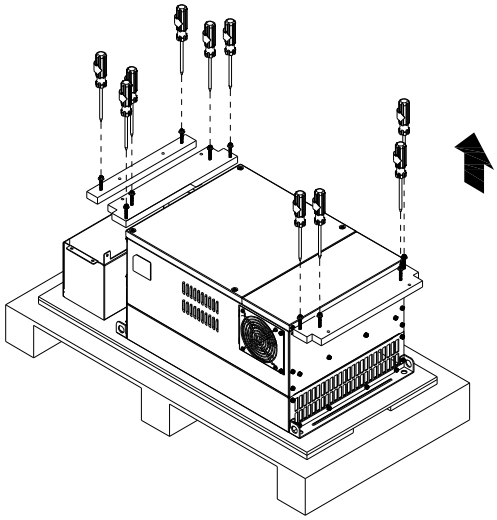 |
| Lift the drive by hooking the lifting hole. It is now ready for installation.<br> 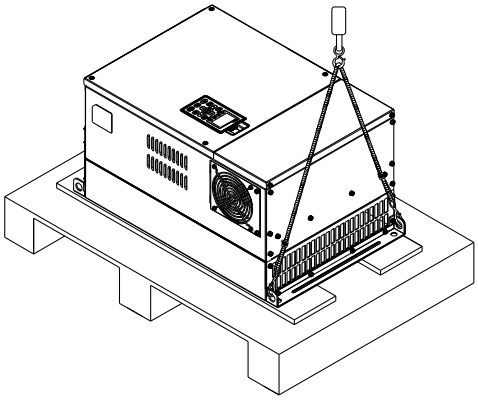 | Lift the drive by hooking the lifting hole. It is now ready for installation.<br> 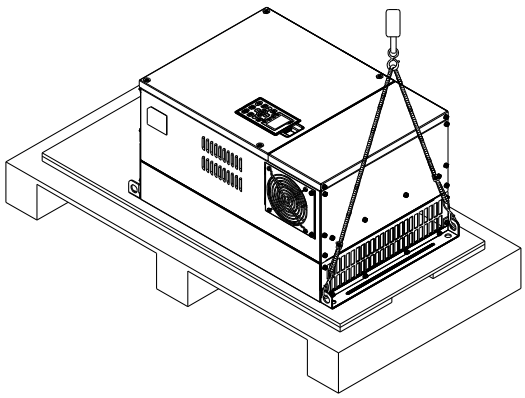 |

## Frame F

| Crate 01 (VFDXXXXCPXXX-00) | Crate 02 (VFDXXXXCPXXX-21) |
|---|---|
| Remove the 6 clips on the side of the crate with a flat-head screwdriver. (As shown in figure below)<br> 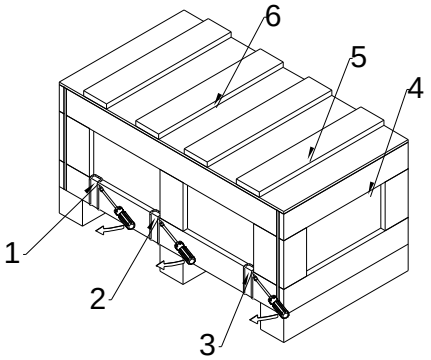 <br> | Remove the 6 clips on the side of the crate with a flat-head screwdriver. (As shown in figure below)<br> 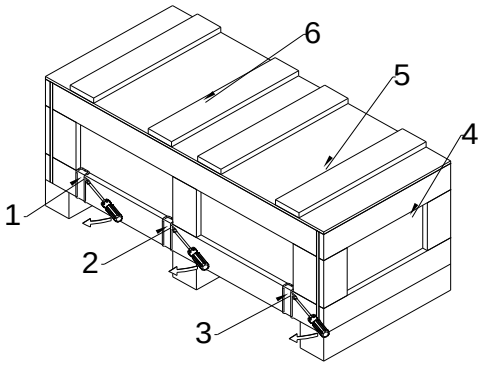 <br> |
| Remove the crate cover, EPEs and manual.<br> 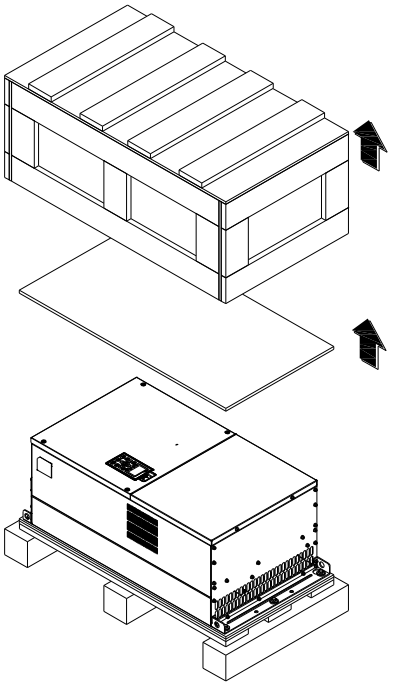 | Remove the crate cover, EPEs, rubber and manual.<br> 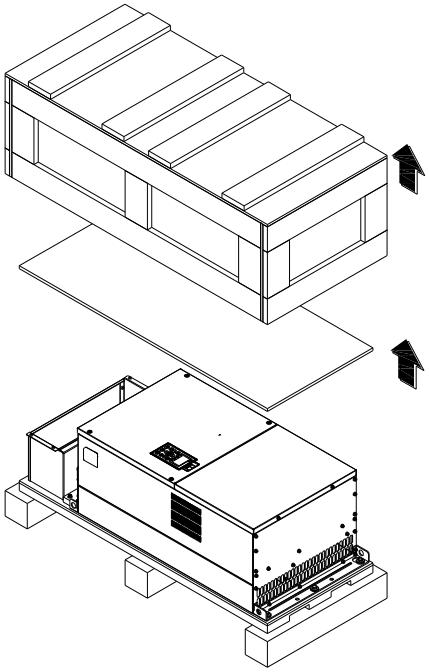 |
| Loosen the 5 screws on the pallet as shown in the following figure.<br> 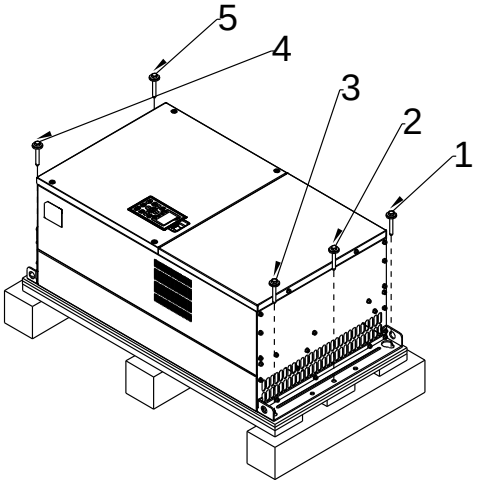 <br> | Loosen the 9 screws on the pallet and remove the wooden plate.<br> 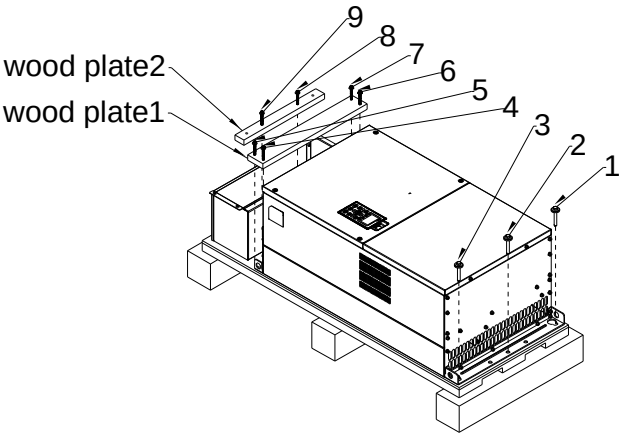 <br> |

| | |
|---|---|
| Lift the drive by hooking the lifting hole. It is now ready for installation.<br> 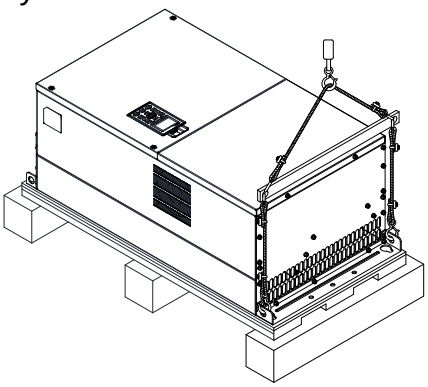 | Lift the drive by hooking the lifting hole. It is now ready for installation.<br> 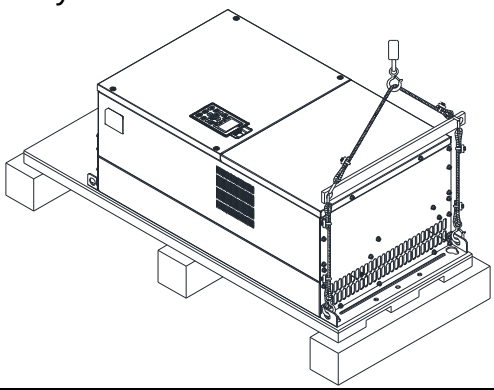 |
| **Frame G** | |
| Crate 01 (VFDXXXXCPXXA-00) | Crate 02 (VFDXXXXCPXXA-21) |
| Remove the 6 clips on the side of the crate with a flat-head screwdriver. (As shown in figure below.)<br> 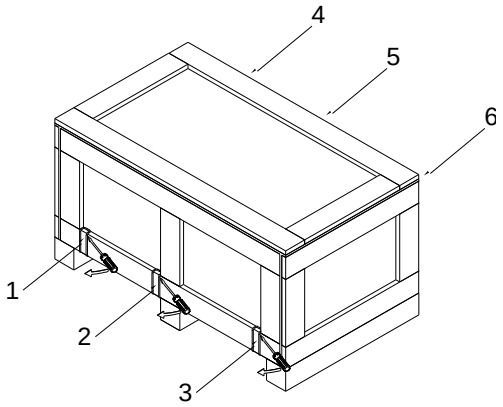 <br> | Remove the 6 clips on the side of the crate with a flat-head screwdriver. (As shown in figure below)<br> 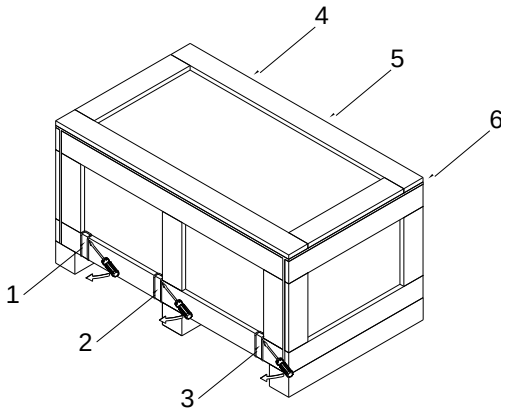 <br> |
| Remove the crate cover, EPEs and manual.<br> 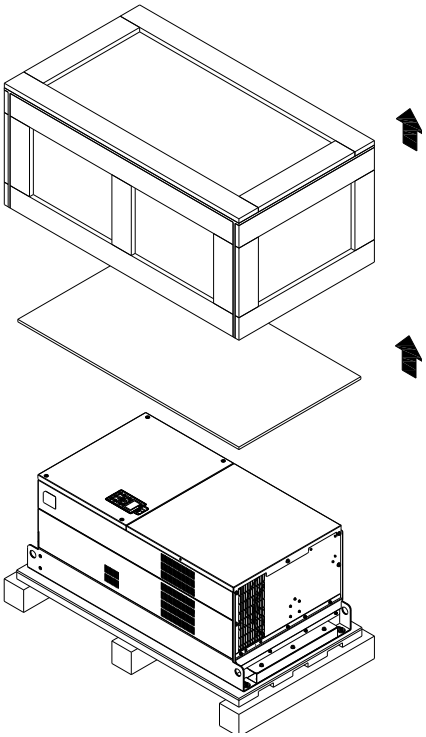 | Remove the crate cover, EPEs, rubber and manual.<br> 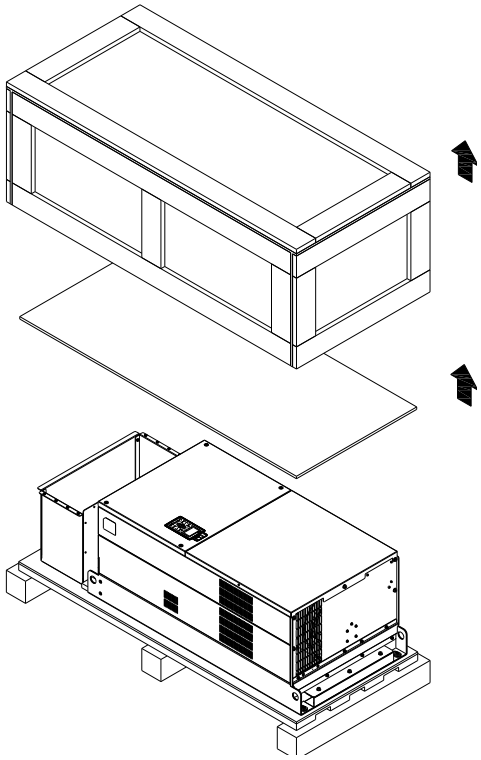 |

| | |
|---|---|
| Loosen the 5 screws as shown in following figure.<br> 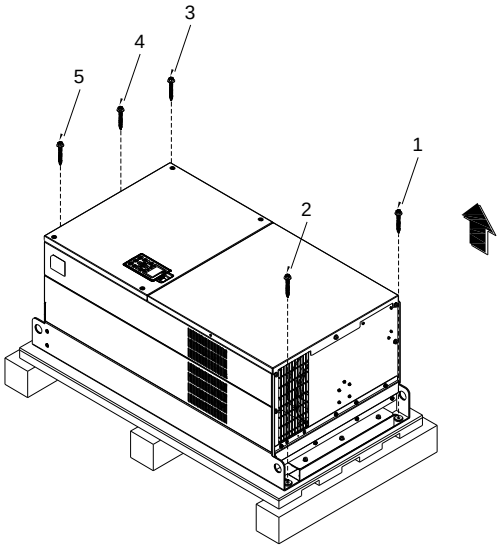 <br> | Loosen the 12 screws and remove the wooden plate.<br> 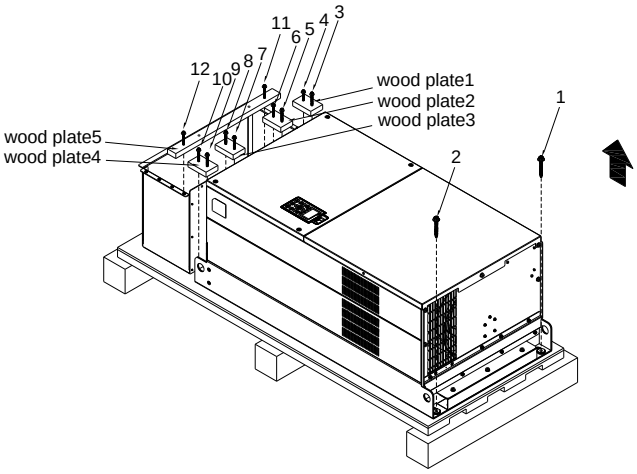 <br> |
| Lift the drive by hooking the lifting hole. It is now ready for installation.<br> 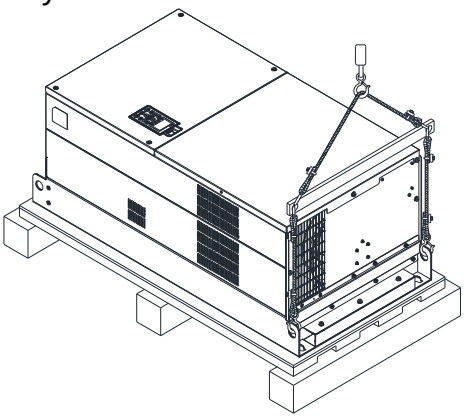 | Lift the drive by hooking the lifting hole. It is now ready for installation.<br> 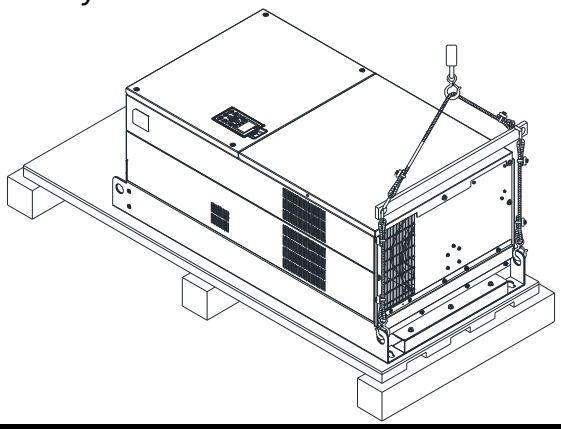 |
| **Frame H** | |
| Crate 01 (VFDXXXXCPXXA-00)<br>Remove the 8 clips on the side of the crate with a flat-head screwdriver. (As shown in figure below)<br> 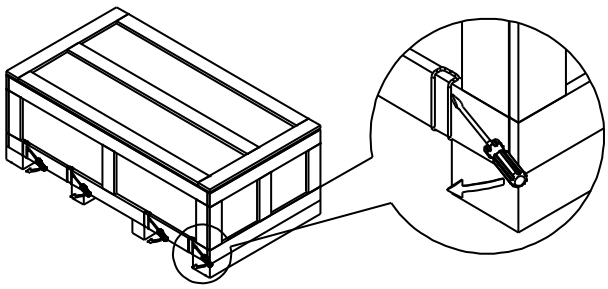 | Crate 02 (VFDXXXXCPXXC-00)<br>Remove the 8 clips on the side of the crate with a flat-head screwdriver. (As shown in figure below)<br> 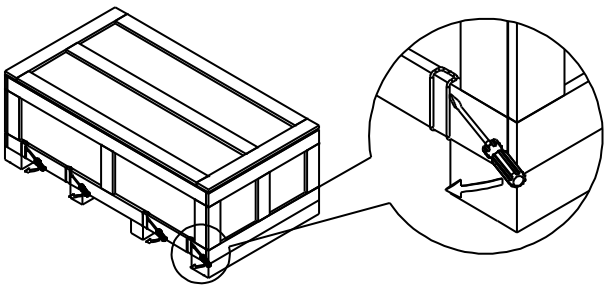 |

| | |
|---|---|
| Remove the crate cover, EPEs and manual.<br> 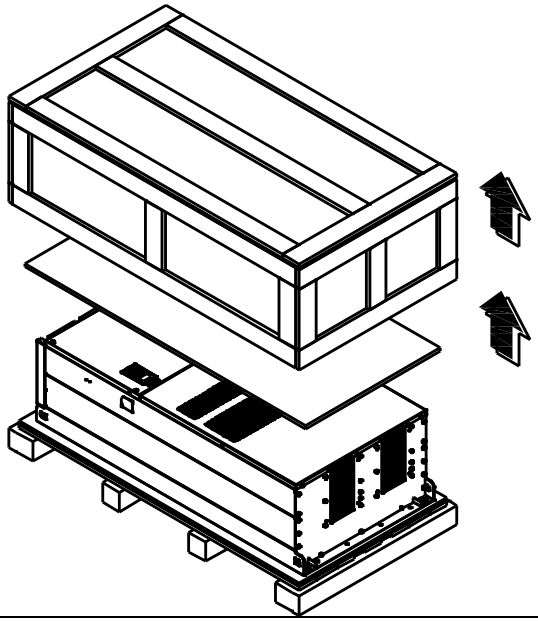 | Remove the crate cover, EPEs, rubbers and manual.<br> 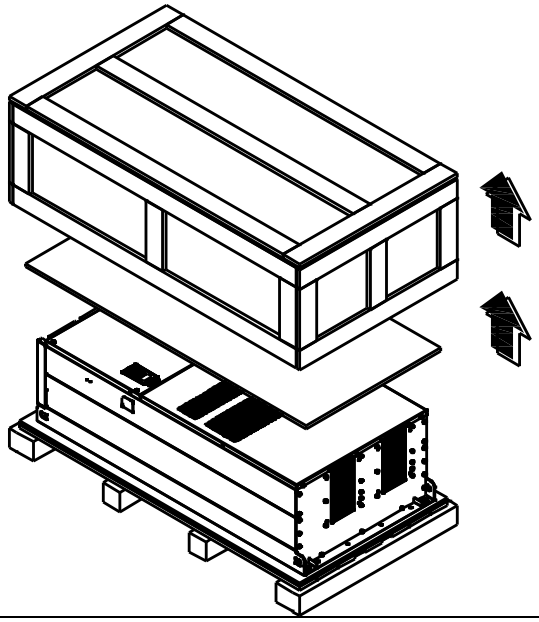 |
| Loosen the 6 screws on the top then remove 6 metal washers and 6 plastic washers as shown in figure below.<br> 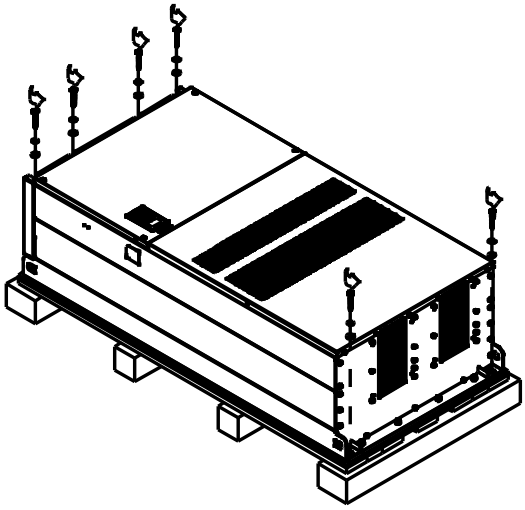 | Loosen the 6 screws on the top then remove 6 metal washers and 6 plastic washers as shown in figure below.<br> 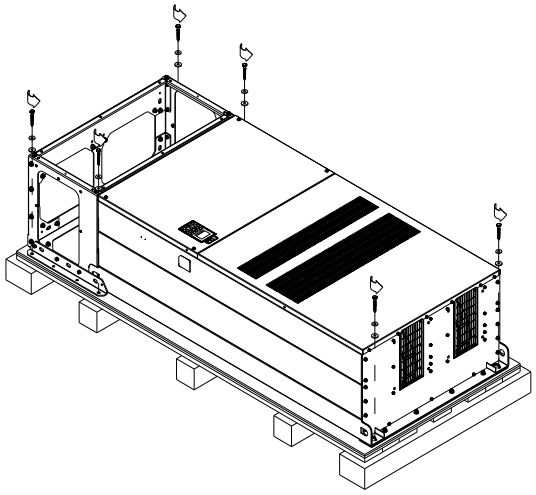 |
| Lift the drive by hooking the lifting hole. It is now ready for installation.<br> 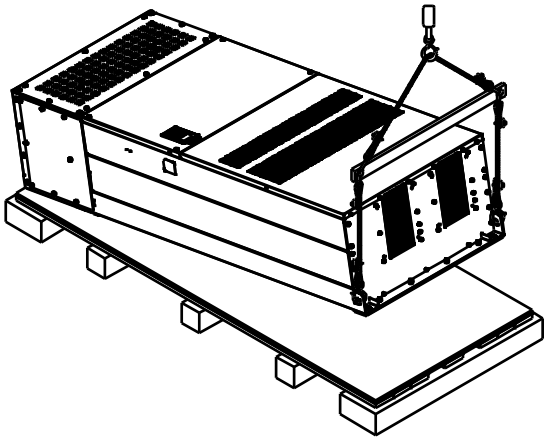 | Loosen 6 of the M6 screws on the side and remove the 2 plates, as shown in below. The removed screws and plates can be used to secure the AC motor drive from the external.<br> 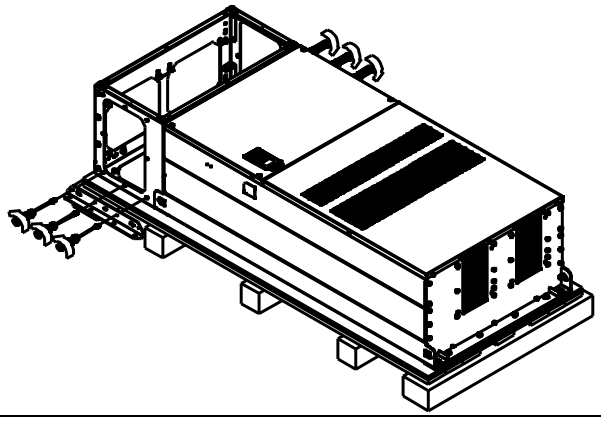 |

**Secure the drive from the external.** (Skip to the next step if it is not necessary in your case)
Loosen 8 of M8 screws on the both sides and place the 2 plates that were removed from the last step. And then fix the plates to AC motor drive by fasten 8 of the M8 screws. (As shown in below)
Torque: 150~180kg-cm [130.20~156.24lb-in.]

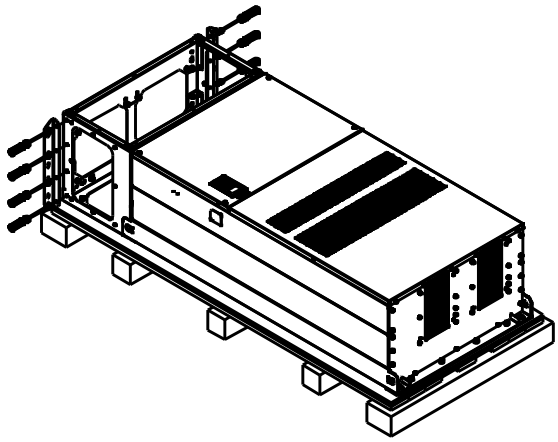

Lift the drive by hooking the lifting hole. It is now ready for installation.

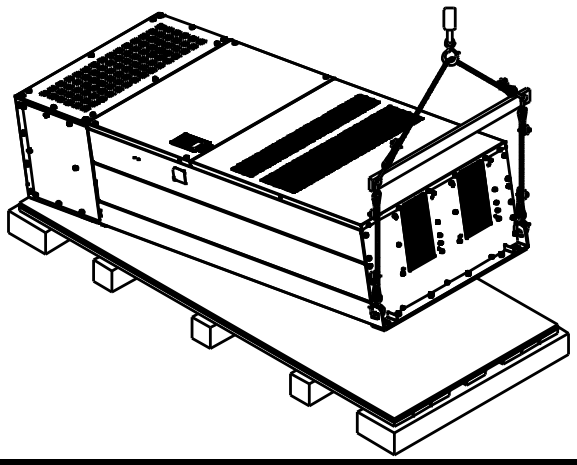

## Frame H

Crate 03 (VFDXXXXCPXXC-21)

Use flat-head screwdriver to remove the clips on the side of the crate, 8 clips in total.

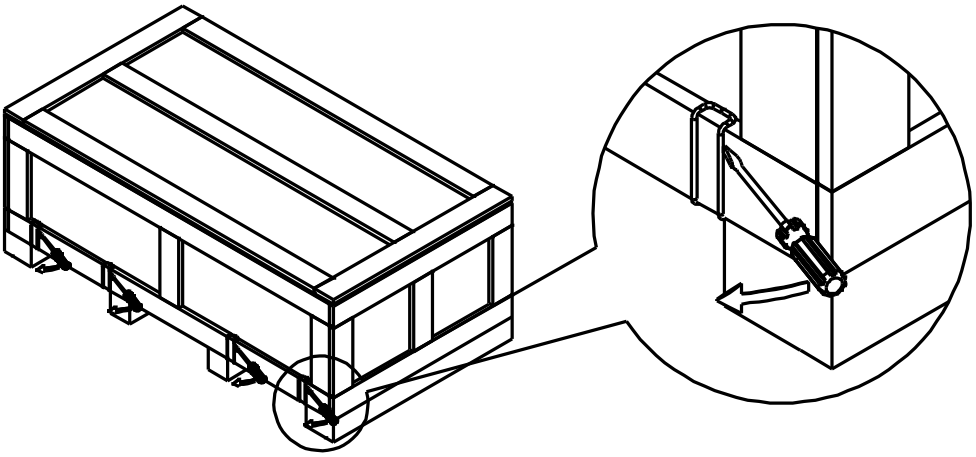

Remove the crate cover, EPEs, rubber and manual.

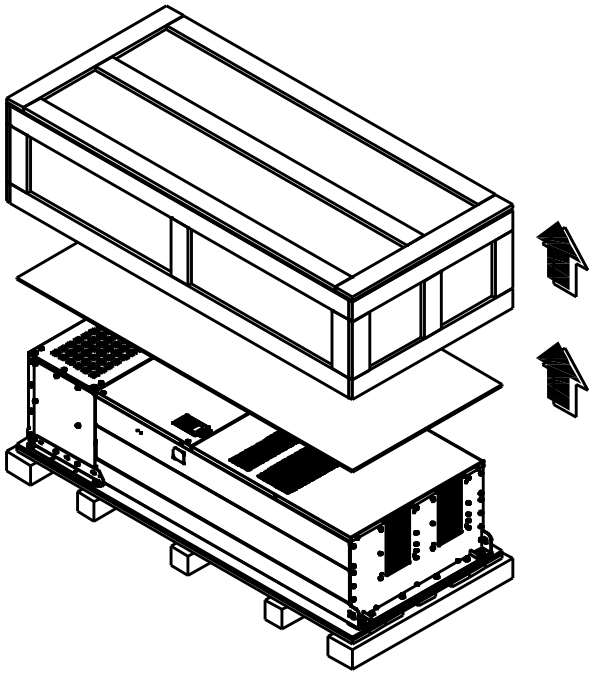

Loosen the 6 screws on the cover; remove 6 metal washers, 6 plastic washers and 6 plastic washers as shown in below.

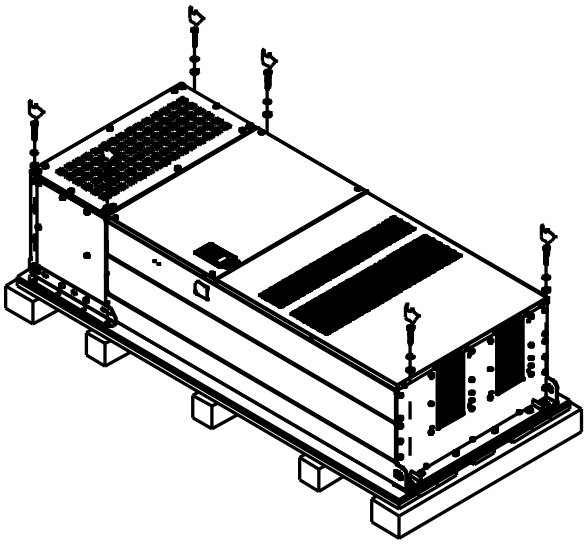

Loosen 6 of the M6 screws on the side and remove the 2 plates, as shown in following figure. The removed screws and plate can be used to secure AC motor drive from the external.

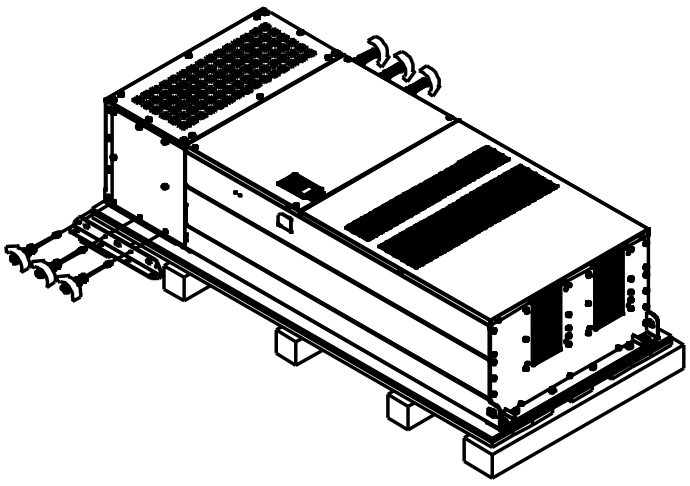

| **Secure the drive from the internal** | **Secure the drive from the external** |
|---|---|
| Loosen 18 of the M6 screws and remove the top cover as shown in figure 2. Mount the cover (figure 1) back to the drive by fasten the M6 screws to the two sides of the drive, as shown in figure 2.<br>Torque: 35~45kg-cm [30.38~39.06lb-in.]<br> 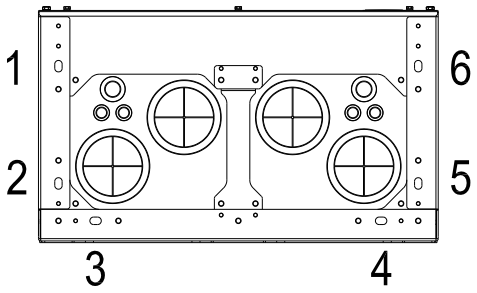 <br><br>Figure 1. Top cover (use M12 screws)<br> 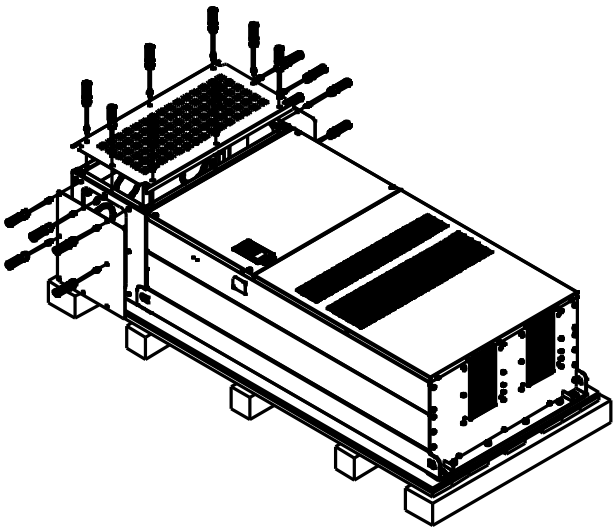 <br>Figure 2 | Loosen 8 of the M8 screws on the both sides and place the 2 plates that were removed from the last step. And then fix the plates to drive by fasten 8 of the M8 screws. (As shown in figure below)<br>Torque: 150~180kg-cm [130.20~156.24lb-in.]<br> 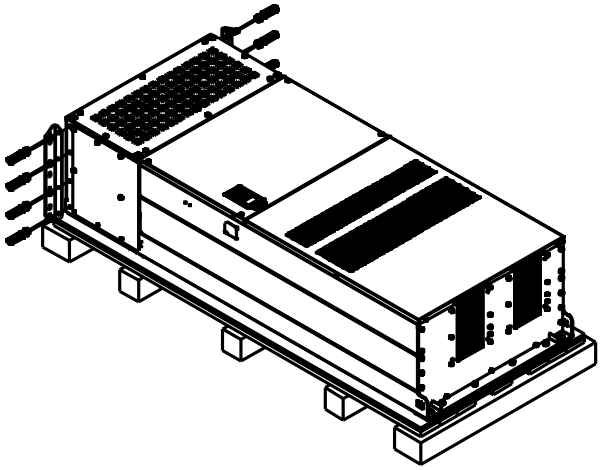 |

Fasten 6 of the M6 screws that were removed from last step back to the AC motor drive. As shown in figure below.

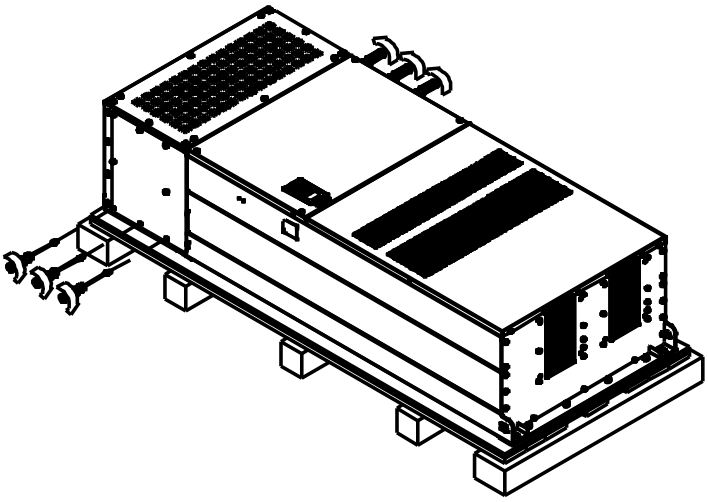

Lift the drive by hooking the lifting hole. It is now ready for installation.

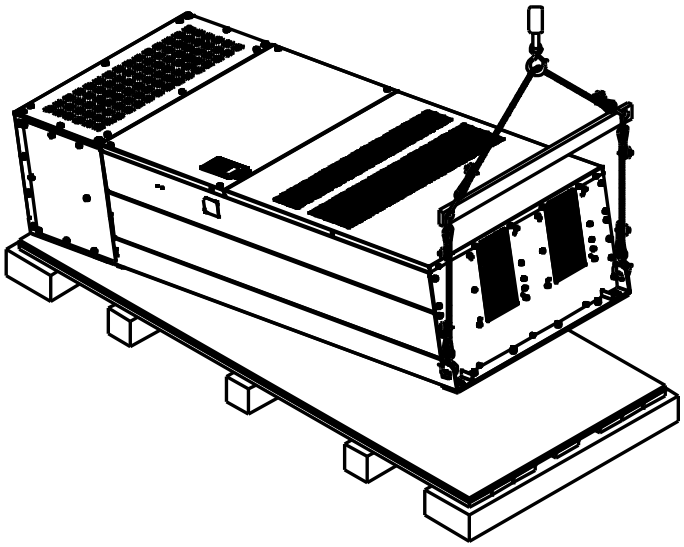

## Frame H: Secure the drive

VFDXXXXCPXXA-00

Screw: M12*6

Torque: 340-420kg-cm [295.1-364.6lb-in.] / [33.3~41.2 Nm]

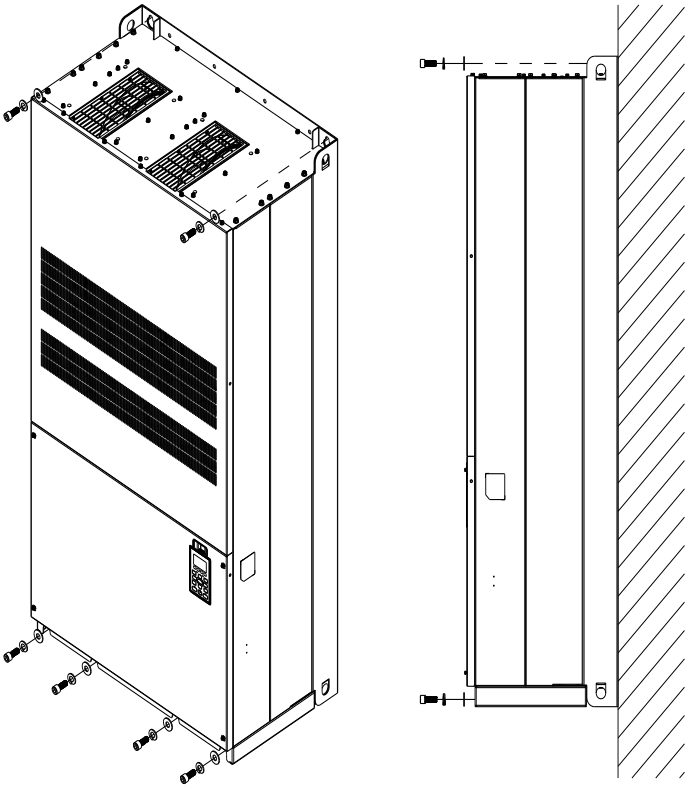

VFDXXXXCPXXC-00

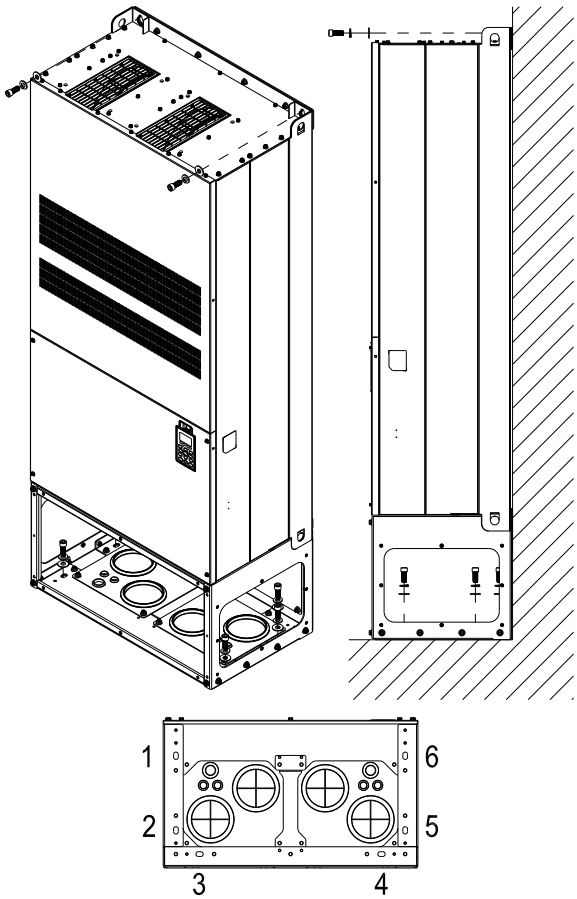


Secure the drive from internal.

Screw: M12*8

Torque: 340-420kg-cm [295.1-364.6lb-in.] / [33.3~41.2 Nm]

VFDXXXXCPXXC-21

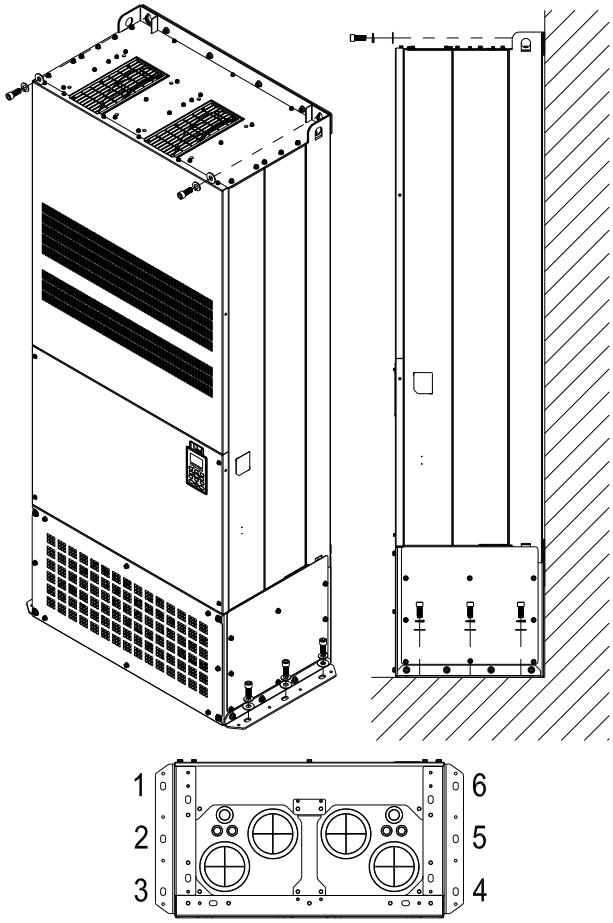


Secure the drive from the external.

Screw: M12*8

Torque: 340-420kg-cm [295.1-364.6lb-in.] / [33.3~41.2 Nm]

## 3-2 The Lifting Hook

The arrows indicate the lifting holes, as in figure below: (Frame D0~H).

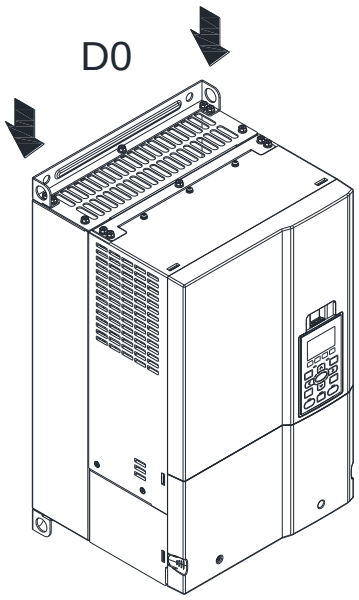


Figure 1

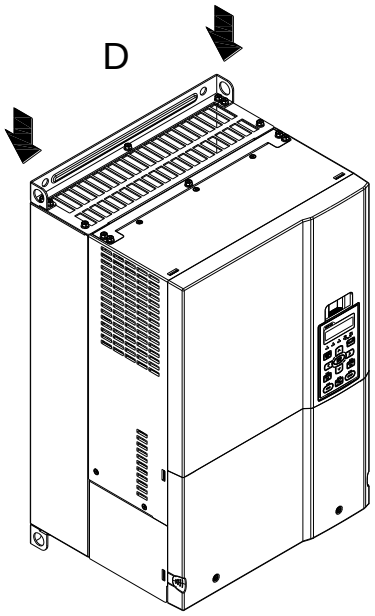


Figure 2

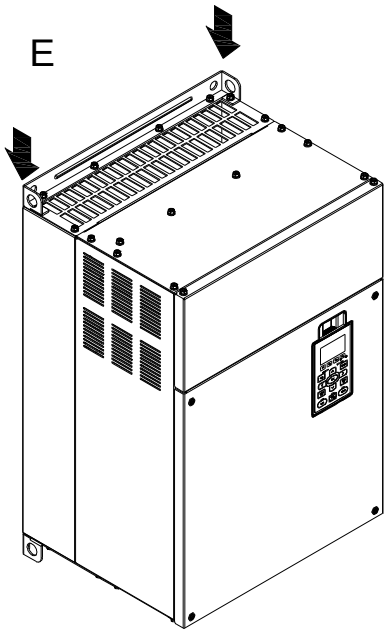


Figure 3

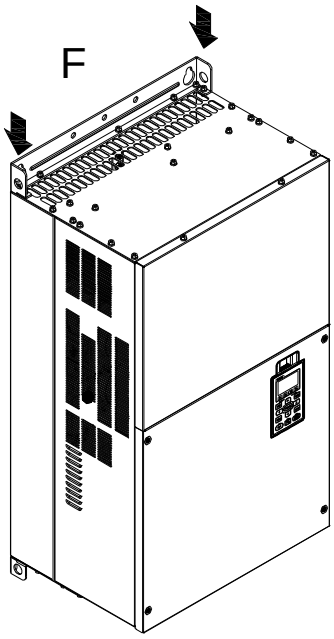


Figure 4

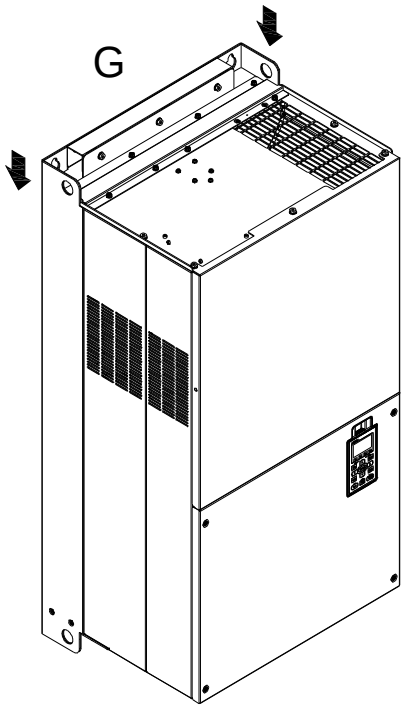


Figure 5

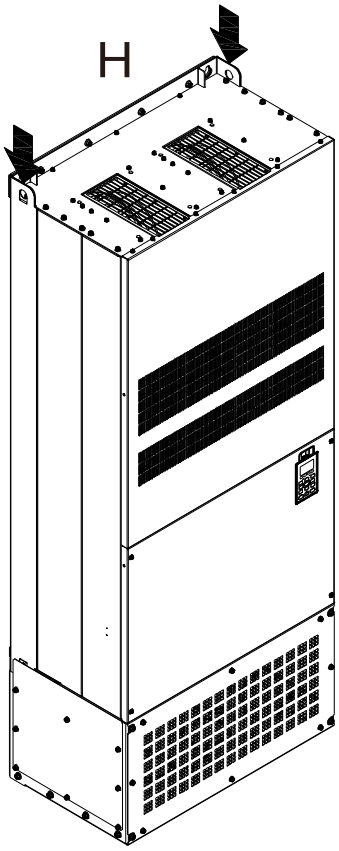


Figure 6

Ensure the lifting hook properly goes through the lifting hole, as shown in the following diagram.
(Applicable for Frame D0~E)

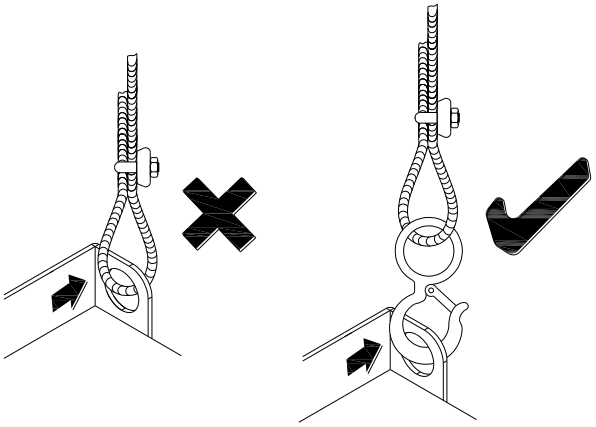

(Applicable to Frame F~H)

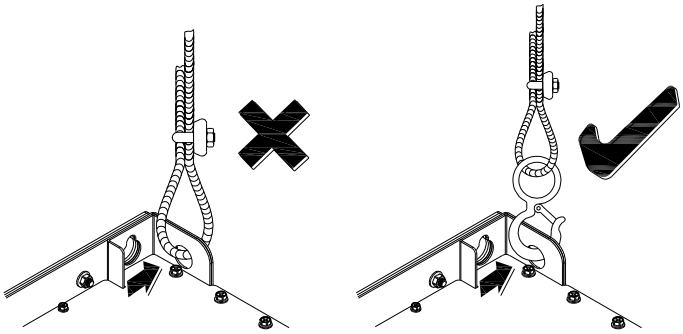

Ensure the angle between the lifting holes and the lifting device is within the specification, as shown in the following diagram.
(Applicable for Frame D0~E)

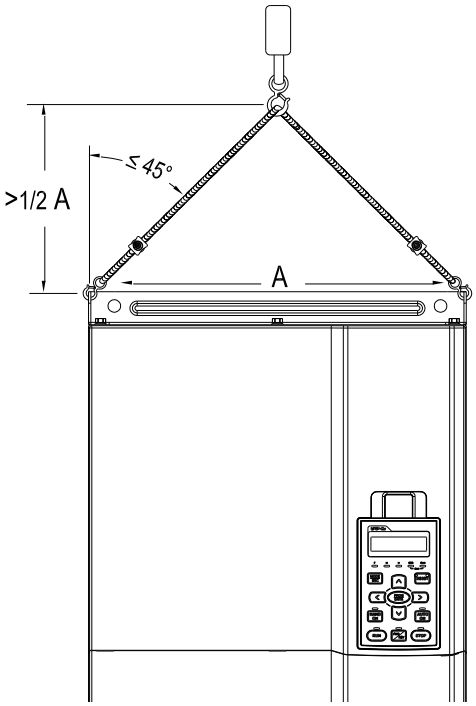


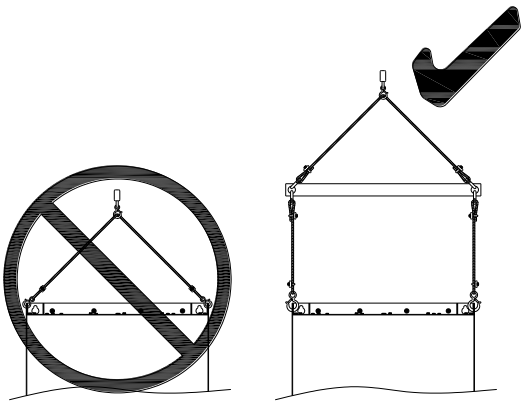

(Applicable from Frame F~H)

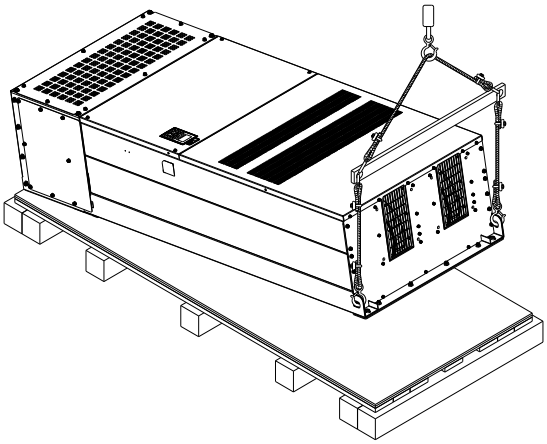

## Weight of models

D0

VFDXXXCPXXX-00
27 kg(59.5 lbs.)

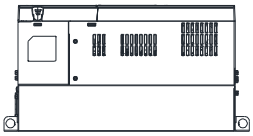

VFDXXXCPXXX-21
29 kg(63.9 lbs.)

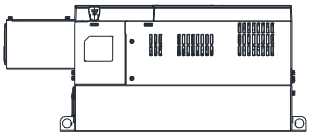

D

VFDXXXCPXXX-00
37.6 kg(82.9 lbs.)

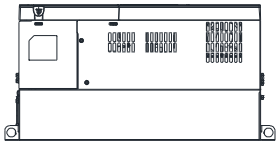

VFDXXXCPXXX-21
40 kg(88.2 lbs.)

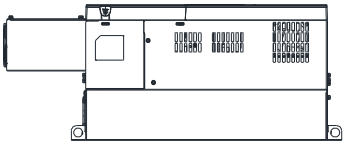

E

VFDXXXXCPXXX-00
63.6 kg(140.2 lbs.)

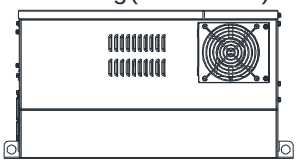

VFDXXXXCPXXX-21
66 kg(145.5 lbs.)

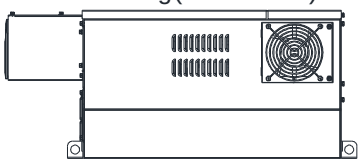

F

VFDXXXXCPXXX-00
85kg(187.2 lbs.)

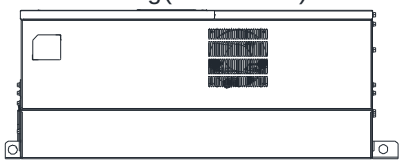

VFDXXXXCPXXX-21
88kg(193.8 lbs.)

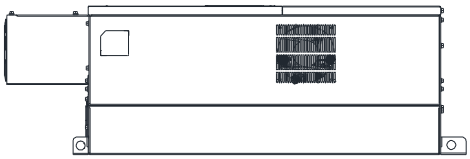

G

VFDXXXXCPXXA-00
130kg(286.5 lbs.)

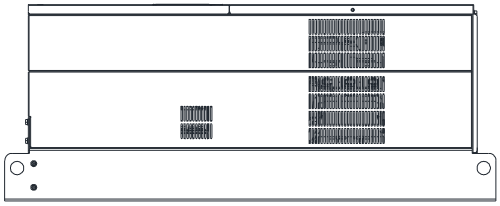

VFDXXXXCPXXA-21
138kg(303.9 lbs.)

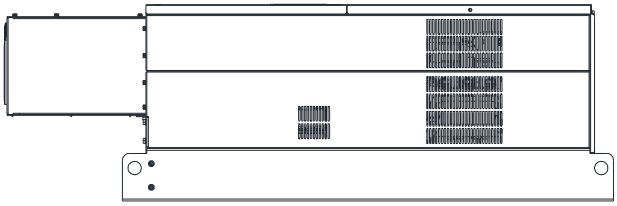

| | |
|---|---|
| 235kg (518.1lbs) | VFD3150CP43A-00; VFD3550CP43A-00; VFD4000CP43A-00; VFD5000CP43A-00; VFD4000CP63A-00; VFD4500CP63A-00; VFD5600CP63A-00; VFD6300CP63A-00 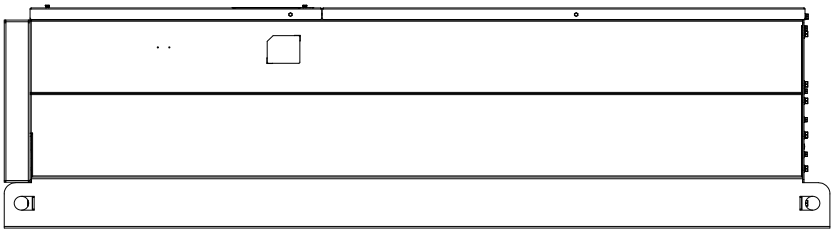 |
| 257kg (566.6lbs) | VFD3150CP43C-00; VFD3550CP43C-00; VFD4000CP43C-00; VFD5000CP43A-21; VFD4000CP63A-21; VFD4500CP63A-21; VFD5600CP63A-21; VFD6300CP63A-21 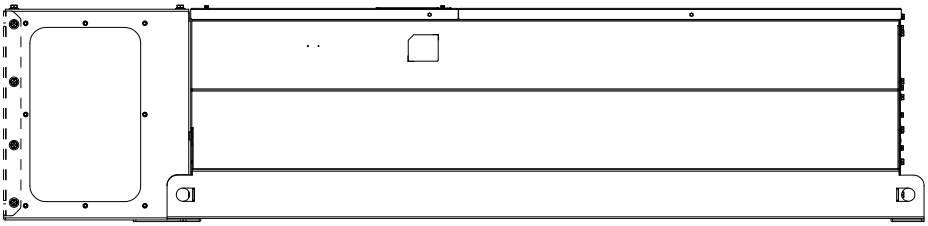 |
| 257kg (566.6lbs) | VFD3150CP43C-21; VFD3550CP43C-21; VFD4000CP43C-21; VFD5000CP43C-21 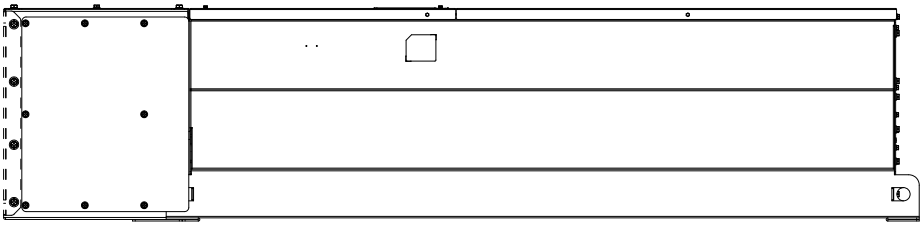 |

[The page intentionally left blank]

# *Chapter 4 Wiring*

4-1 Wiring

4-2 System Wiring Diagram

**After removing the front cover, please check if the power and control terminals are clearly noted. Please read following precautions to avoid wiring mistakes.**

| | |
|---|---|
| **DANGER** | ☑ It is crucial to cut off the AC motor drive power before any wiring. A charge may still remain in the DC-BUS capacitors with hazardous voltages even if the power has been turned off only after a short time. Therefore it is suggested measure the remaining voltage by DC voltage meter before wiring. For your personnel safety, please do not start wiring before the voltage drops to a safe level < 25 VDC. Wiring installation with remaining voltage condition may cause sparks and short circuit.<br>☑ Only qualified personnel familiar with AC motor drives is allowed to perform installation, wiring and commissioning. Make sure the power is turned off before wiring to prevent electric shock.<br>☑ The main circuit terminals R/L1, S/L2, T/L3 are for power input. If the power is wrongly connected to others terminals, it may result in damage to the equipment. The voltage and current should lie within the range as indicated on the nameplate (Chapter 1-1).<br>☑ All the units must be grounded directly to a common ground terminal to prevent lightning strike or electric shock.<br>☑ Please make sure to tighten the screw of the main circuit terminals to prevent sparks due to the loosening of vibrations. |
| **CAUTION** | ☑ When wiring, please choose the wires with specification that complies with local regulation for your personnel safety.<br>☑ Check following items after finishing the wiring:<br>1. Are all connections correct?<br>2. Any loosen wires?<br>3. Any short-circuits between the terminals or to ground? |

## 4-1 Wiring

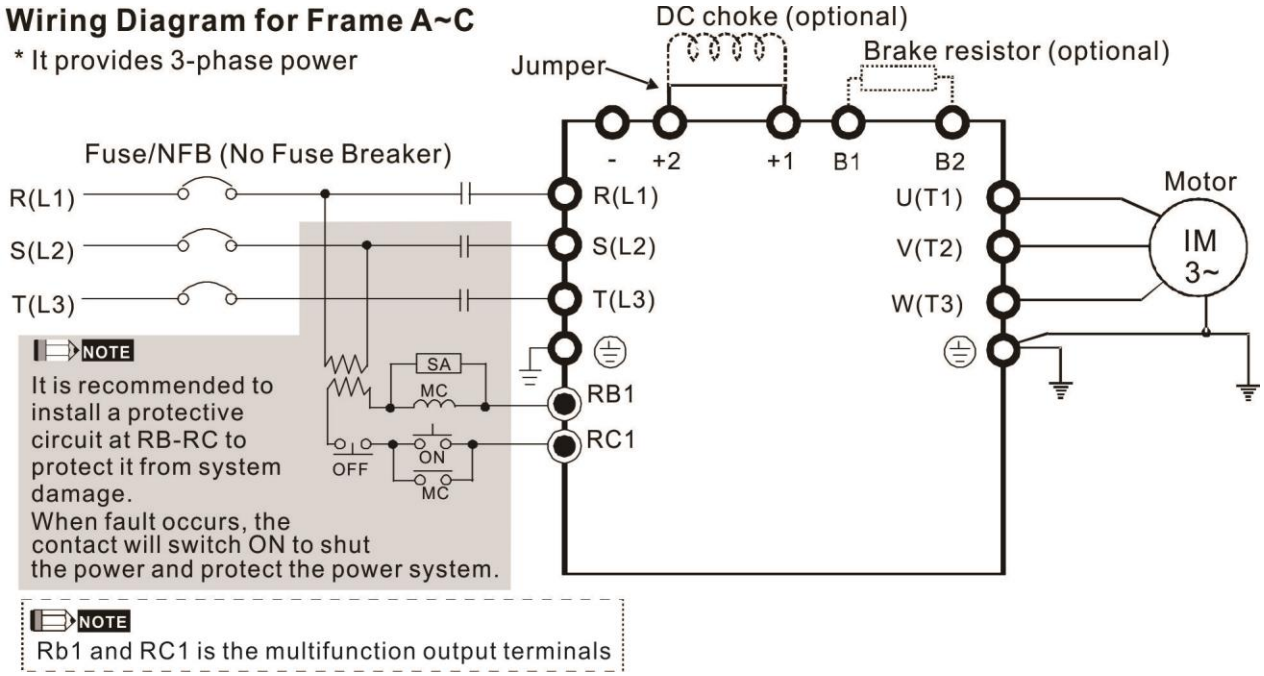


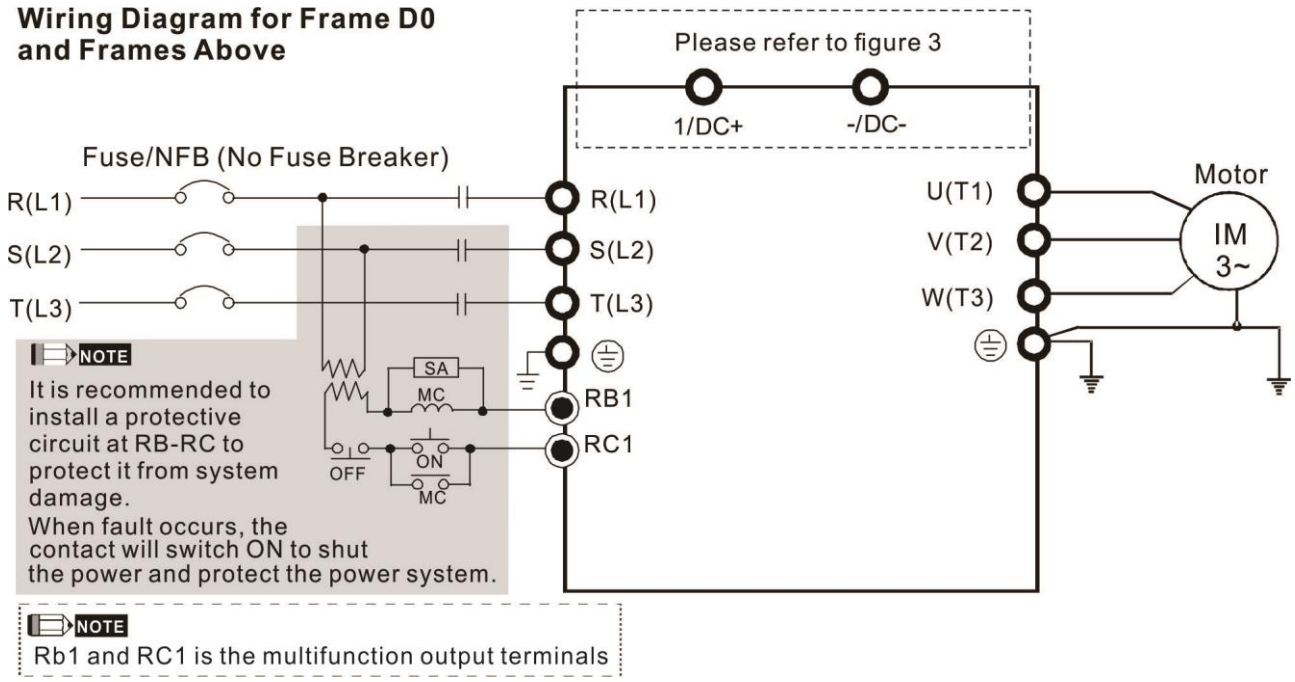


*1 Please refer to Figure 4-9 for DC link wiring

*2 Please refer to Chapter 7-1 for brake units and resistors selection

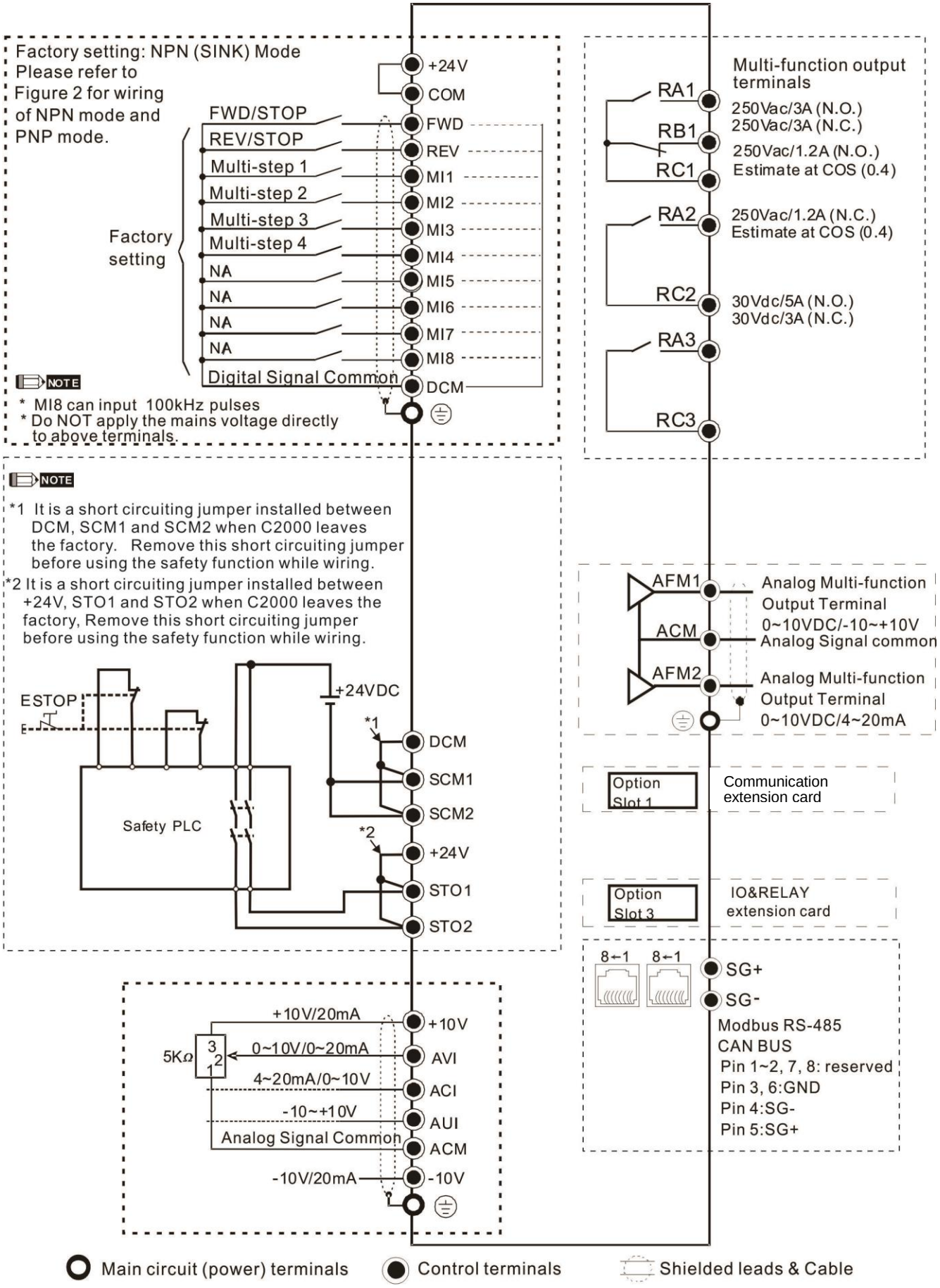
Factory setting: NPN (SINK) Mode
Please refer to Figure 2 for wiring of NPN mode and PNP mode.
+24V
COM
FWD/STOP
REV/STOP
Multi-step 1
Multi-step 2
Multi-step 3
Multi-step 4
NA
NA
NA
NA
Factory setting
FWD
REV
MI1
MI2
MI3
MI4
MI5
MI6
MI7
MI8
Digital Signal Common
DCM
NOTE
* MI8 can input 100kHz pulses
* Do NOT apply the mains voltage directly to above terminals.
Multi-function output terminals
RA1
RB1
RC1
250Vac/3A (N.O.)
250Vac/3A (N.C.)
250Vac/1.2A (N.O.)
Estimate at COS (0.4)
RA2
250Vac/1.2A (N.C.)
Estimate at COS (0.4)
RC2
30Vdc/5A (N.O.)
30Vdc/3A (N.C.)
RA3
RC3
NOTE
*1 It is a short circuiting jumper installed between DCM, SCM1 and SCM2 when C2000 leaves the factory. Remove this short circuiting jumper before using the safety function while wiring.
*2 It is a short circuiting jumper installed between +24V, STO1 and STO2 when C2000 leaves the factory, Remove this short circuiting jumper before using the safety function while wiring.
ESTOP
+24VDC
*1
DCM
SCM1
SCM2
Safety PLC
*2
+24V
STO1
STO2
AFM1
ACM
AFM2
Analog Multi-function Output Terminal
0~10VDC/-10~+10V
Analog Signal common
Analog Multi-function Output Terminal
0~10VDC/4~20mA
Option Slot 1
Communication extension card
Option Slot 3
IO&RELAY extension card
8←1
8←1
SG+
SG-
Modbus RS-485
CAN BUS
Pin 1~2, 7, 8: reserved
Pin 3, 6:GND
Pin 4:SG-
Pin 5:SG+
+10V/20mA
+10V
5KΩ
0~10V/0~20mA
AVI
4~20mA/0~10V
ACI
-10~+10V
AUI
Analog Signal Common
ACM
-10V/20mA
-10V
Main circuit (power) terminals
Control terminals
Shielded leads & Cable

## 4-1-1 For Frame G and above

Power → Transformer → VFD-CP2000

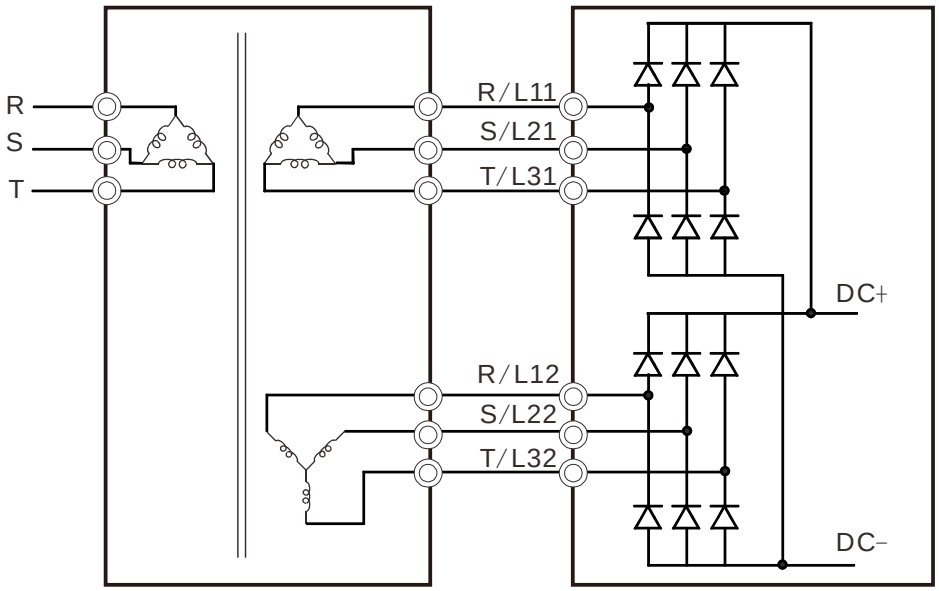


## 4-1-2 SINK(NPN)/SOURCE(PNP) Mode

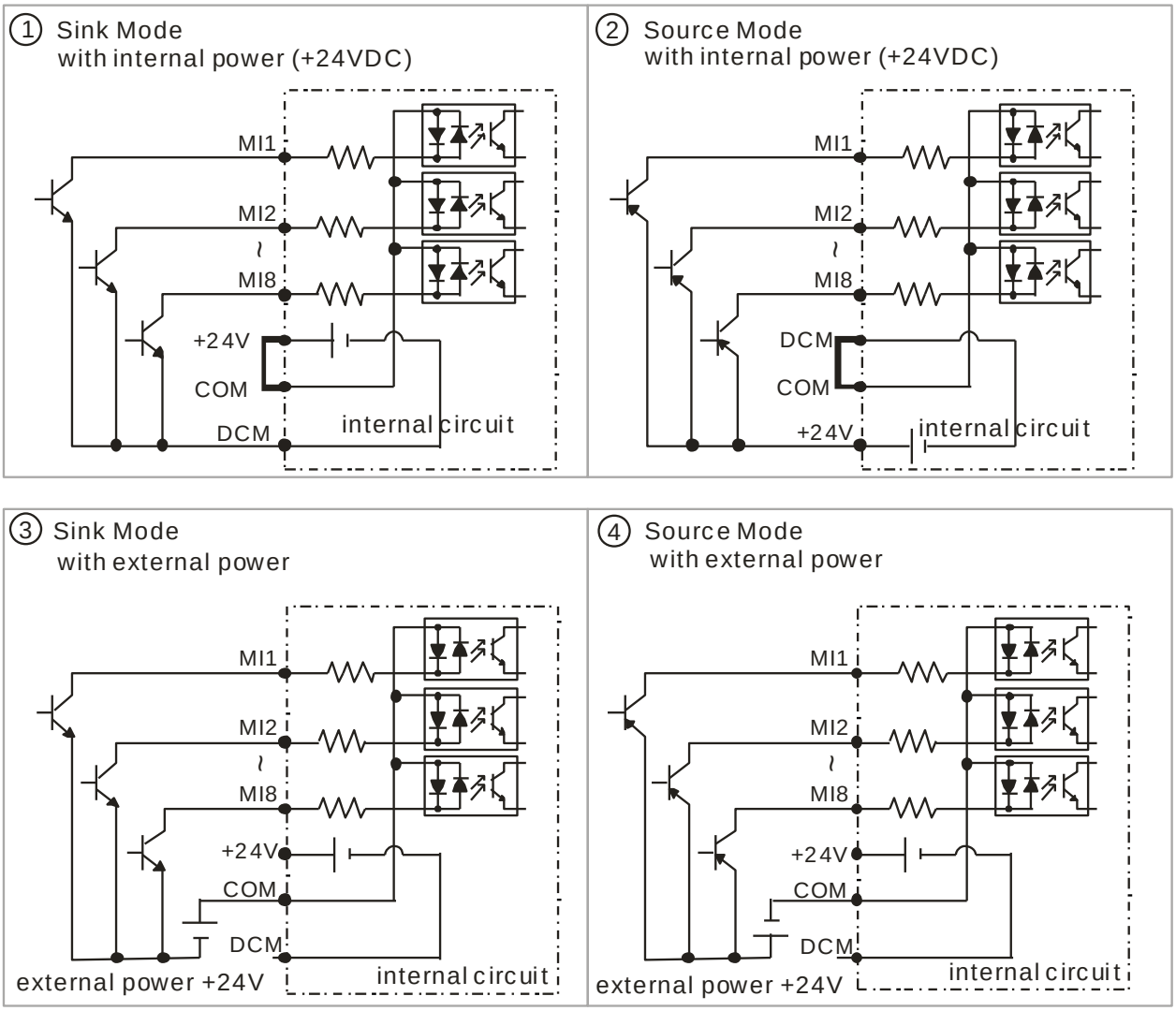

## 4-1-3 Function of DC Link

☑ Applicable to Frame E~H

☑ Operation Instruction

4-1-3-1 Common DC power and common DC-BUS link (refer to Chart 1)

The terminal R and S (refer to Figure 4-1) are not required to remove when linking common DC power and common DC-BUS

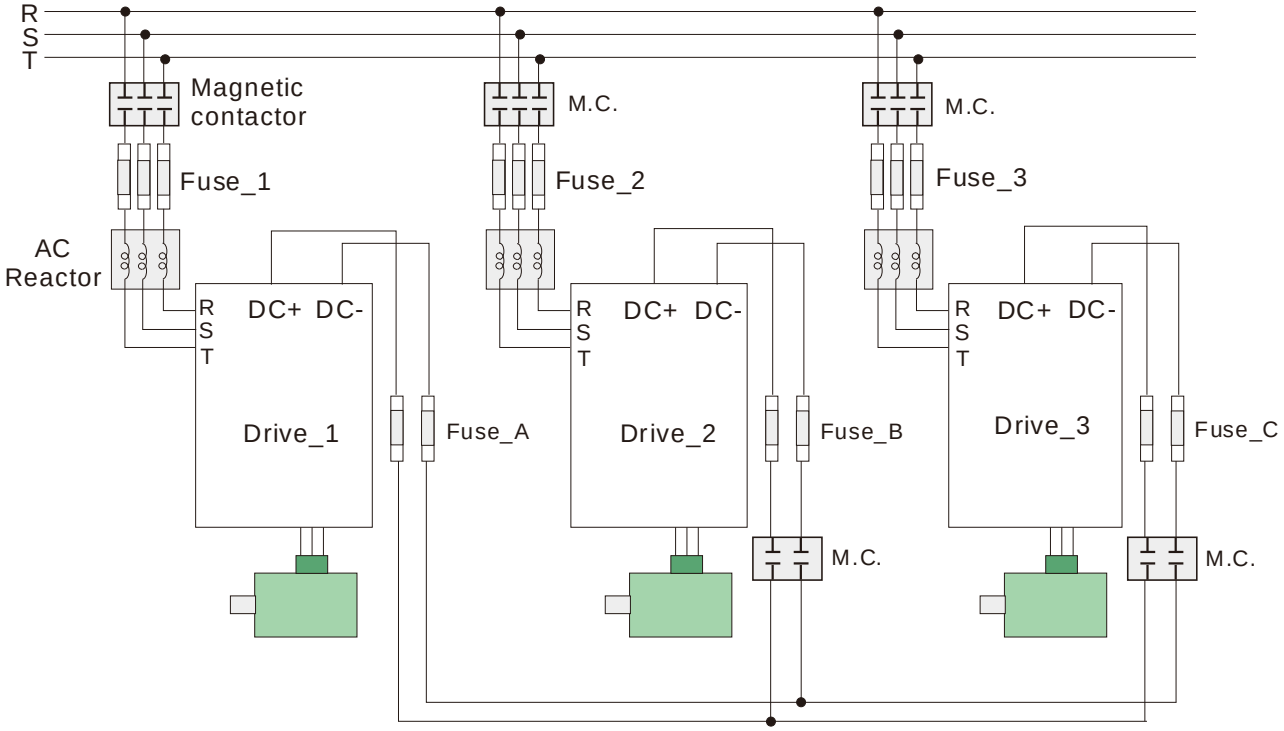


Figure 4-1

4-1-3-2 Common DC-BUS link (refer to Figure 4-2)

- When RST power is off, please disconnect terminal r and terminal s. (As circled in Chart 3, disconnecting the gray section and properly store the cable of r and s. Cable of r and s are not available in optional accessories, please reserve it carefully.)
- After removing the cable of terminal r and terminal s, the power source can be connected to terminal r and terminal s. Please connect 220VAC for 230V model and 440VAC for 460V model.
- When the drive power is on, if terminal r and terminal s are not connected to the power source (220VAC for 230V model and 440VAC for 460 V model), the digital keypad will display an error message “ryF”

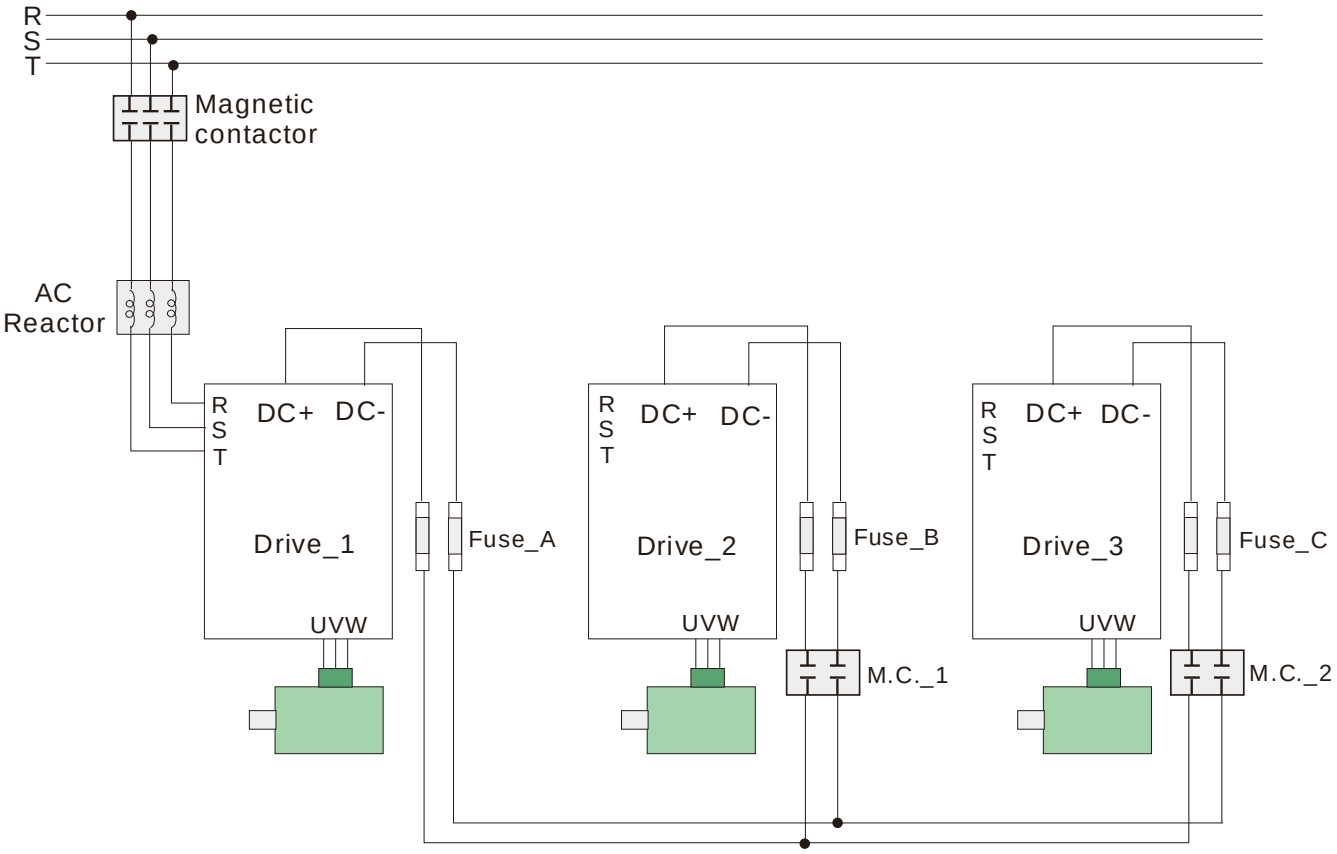


Figure 4-2

**NOTE**

Common DC-BUS can only be applied to the drives with same power range. If in your case the drive is in different power range, please contact us (Delta Industrial Automation Business Group).

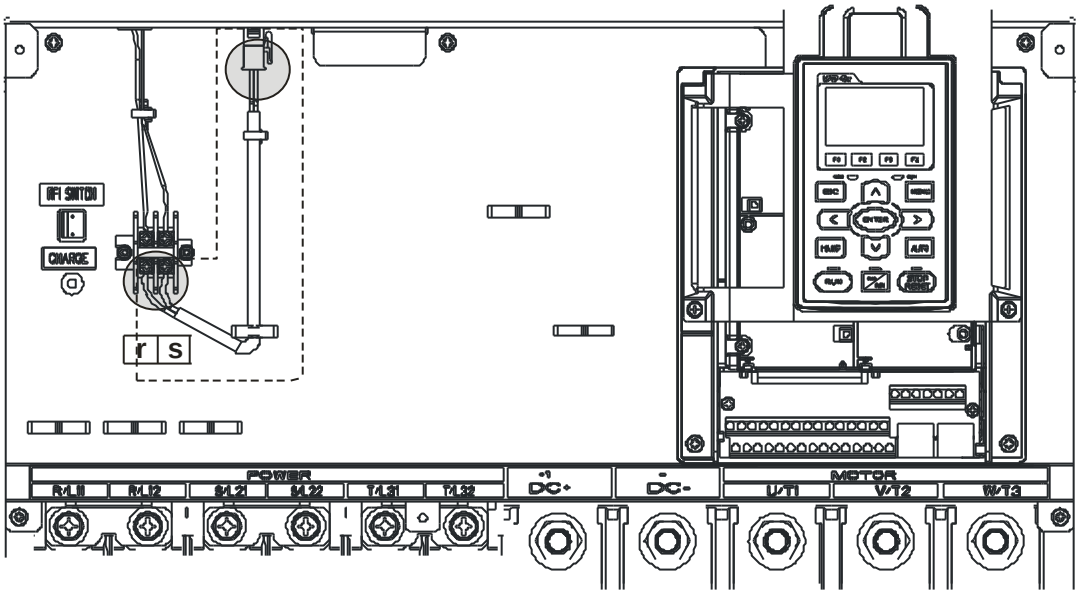

# 4-2 System Wiring Diagram

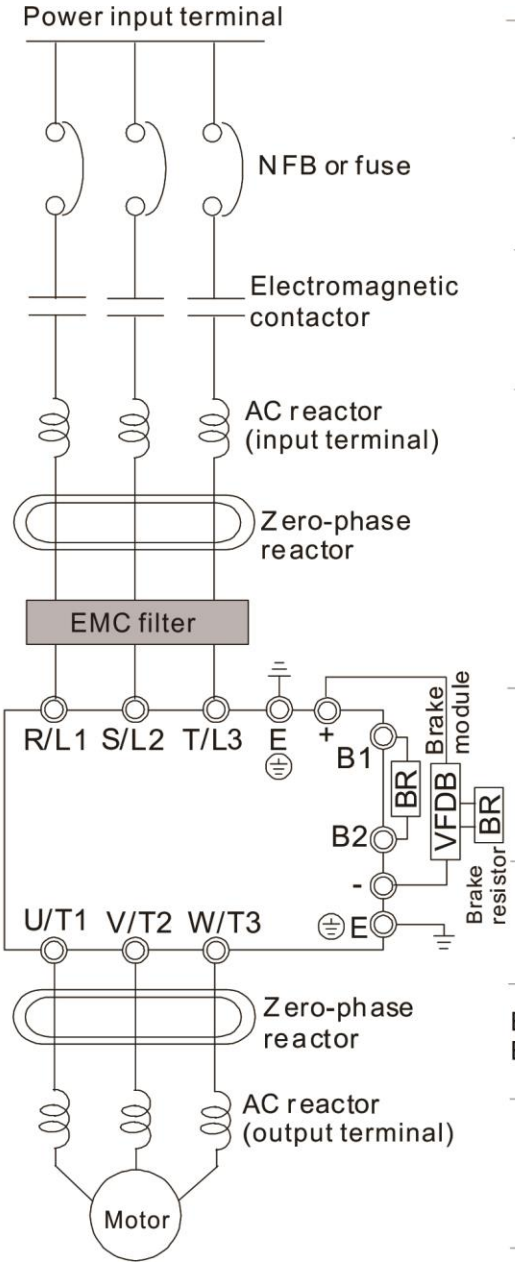


| | |
|---|---|
| Power input terminal | Please refer to Chapter 9 Specification Table in user manual for detail |
| NFB or fuse | There may be a large inrush current during power on. Refer to 7-2 NFB to select a suitable NFB or 7-3 Fuse Specification Chart. |
| Electromagnetic contactor | Switching the power ON/OFF before the magnetic contactor more than 1xper hour can cause damage to the drive. |
| AC reactor (input terminal) | When the mains power capacity is > 500kVA or when the drive is preceded by a capacitor bank, instantaneous peaks voltages and current may destroy the drive. In that case it is recommended to install an AC input reactor which will also improve the power factor and harmonics. The cable between reactor and drive should be < 10m.<br>Please refer to Chapter 7-4. |
| Zero-phase reactor | Used to reduce radiated emission, especially in environments with audio devices, and reduce input and output side interference.<br>The effective range is AM band to 10MHz.<br>Please refer to Chapter 7-5. |
| EMC filter | Can be used to reduce electromagnetic interference.<br>Please refer to Chapter 7-6. |
| Brake module & Brake resistor(BR) | Used to shorten the deceleration time of the motor.<br>Please refer to Chapter 7-1. |
| AC reactor (output terminal) | The motor cable length will affect switching current peaks. It is recommended to install an AC output reactor when the motor cable length exceeds the value in Chapter 7-4. |

# *Chapter 5 Main Circuit Terminals*

5-1 Specifications of Control Terminal

5-2 Remove the Terminal Block

**DANGER**

- ☑ Fasten the screws in the main circuit terminal to prevent sparks condition made by the loose screws due to vibration.
- ☑ When it needs to install the filter at the output side of terminals U/T1, V/T2, W/T3 on the AC motor drive. Please use inductance filter. Do not use phase-compensation capacitors or L-C (Inductance-Capacitance) or R-C (Resistance-Capacitance), unless approved by Delta.
- ☑ DO NOT connect phase-compensation capacitors or surge absorbers at the output terminals of AC motor drives.
- ☑ DO NOT connect [+1, -], [+2, -], [+1/DC+, -/DC-] or brake resistor directly to prevent drive damage.
- ☑ Ensure the insulation of the main circuit wiring in accordance with the relevant safety regulations.

**CAUTION**

## Main power terminals

- ☑ Do not connect 3-phase model to one-phase power. R/L1, S/L2 and T/L3 has no phase-sequence requirement, it can be used upon random selection.
- ☑ It is recommend adding a magnetic contactor (MC) to the power input wiring to cut off power quickly and reduce malfunction when activating the protection function of the AC motor drive. Both ends of the MC should have an R-C surge absorber.
- ☑ Please use voltage and current within the specification.
- ☑ When using a general GFCI (Ground Fault Circuit Interrupter), select a current sensor with sensitivity of 200mA or above and not less than 0.1-second operation time to avoid nuisance tripping.
- ☑ Please use the shield wire or tube for the power wiring and ground the two ends of the shield wire or tube.
- ☑ Do NOT run/stop AC motor drives by turning the power ON/OFF. Run/stop AC motor drives by RUN/STOP command via control terminals or keypad. If you still need to run/stop AC motor drives by turning power ON/OFF, it is recommended to do so only ONCE per hour.
- ☑ Connect the drive to a 3-phase three-wire or 3-phase four-wire Wye system to comply with UL standards.

## Output terminals for main circuit

- ☑ Use well-insulated motor, suitable for inverter operation.
- ☑ When the AC drive output terminals U/T1, V/T2, and W/T3 are connected to the motor terminals U/T1, V/T2, and W/T3, respectively, the motor will rotate counterclockwise (as viewed on the shaft end of the motor) when a forward operation command is received. To permanently reverse the direction of motor rotation, switch over any of the two motor leads

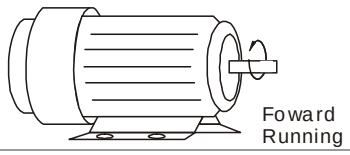

Terminals for connecting DC reactor, external brake resistor, external brake resistor and DC circuit

☑ This is the terminals used to connect the DC reactor to improve the power factor. For the factory setting, it connects the short-circuit object. Please remove this short-circuit object before connecting to the DC reactor.

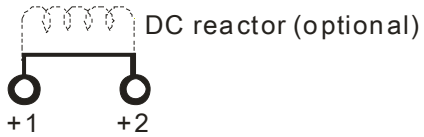


☑ Connect a brake resistor or brake unit in applications with frequent deceleration ramps, short deceleration time, too low brake torque or requiring increased brake torque.

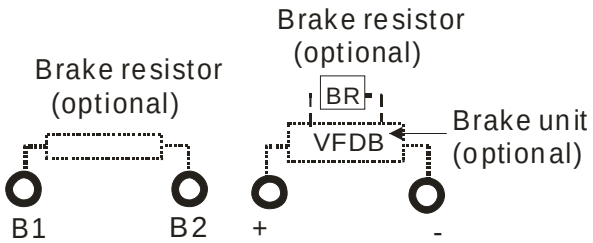


☑ The external brake resistor of Frame A, B and C should connect to the terminals (B1, B2) of AC motor drives.

☑ For those models without built-in brake resistor, please connect external brake unit and brake resistor (both of them are optional) to increase brake torque.

☑ When the terminals +1, +2 and - are not used, please leave the terminals open.

☑ DC+ and DC- are connected by common DC-BUS, please refer to Chapter 5-1 (Main Circuit Terminal) for the wiring terminal specification and the wire gauge information.

☑ Please refer to the VFDB manual for more information on wire gauge when installing the brake unit.

## 5-1 Main Circuit Diagram

For frame A~C

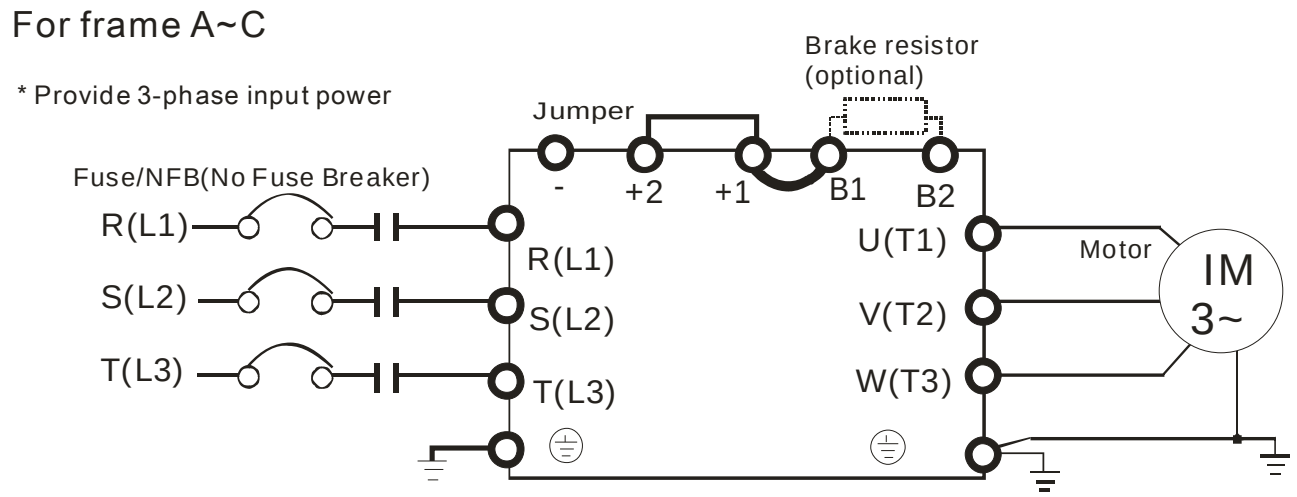


For frame A~C

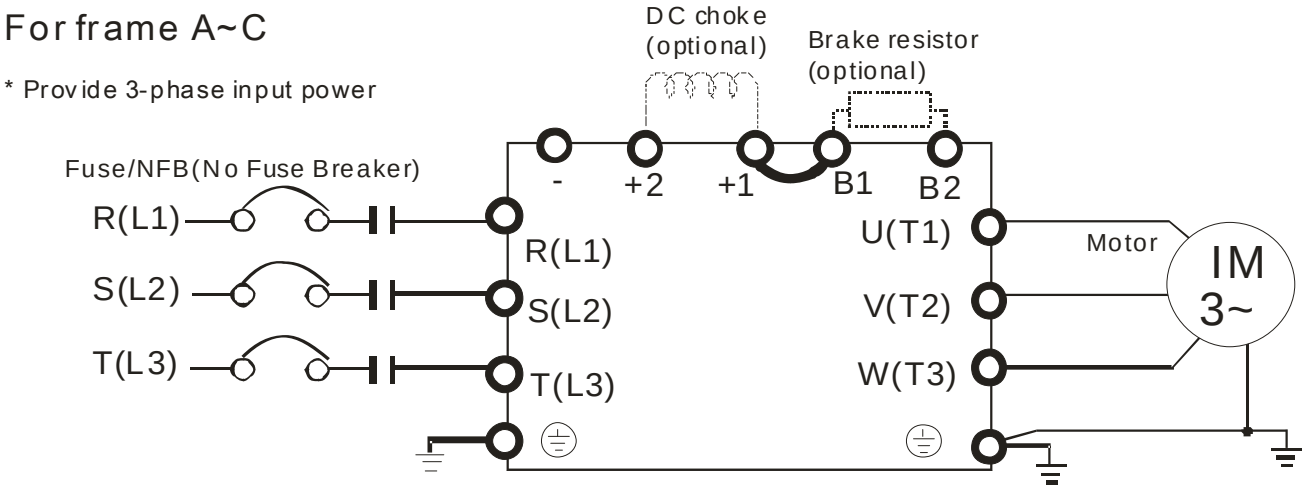


For frame D0 and above D0

* Provide 3-phase input power

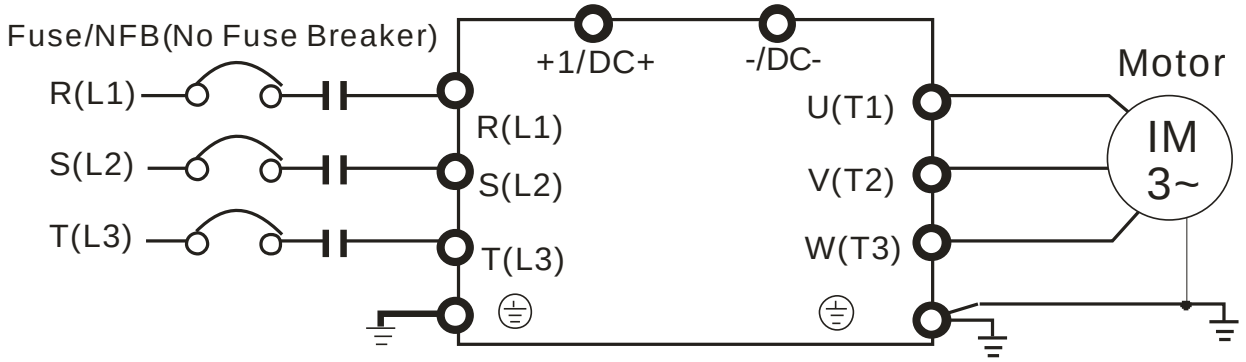

Frame G and above

Power → Transformer → VFD-CP2000

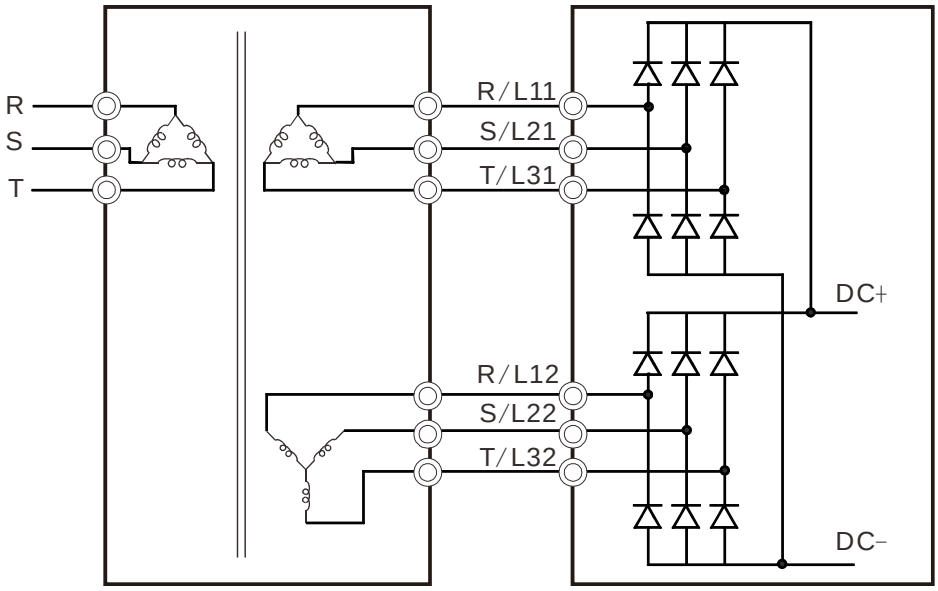


**NOTE**

- If the wiring between motor drive and motor is over 75 meters, please refer to Chapter 7-4 Specifications of limits for motor cable length.
- Please remove short circuit plate of Frame G and H if 12 pulse is implemented, before implementing 12 pulse, consult Delta for more detail.

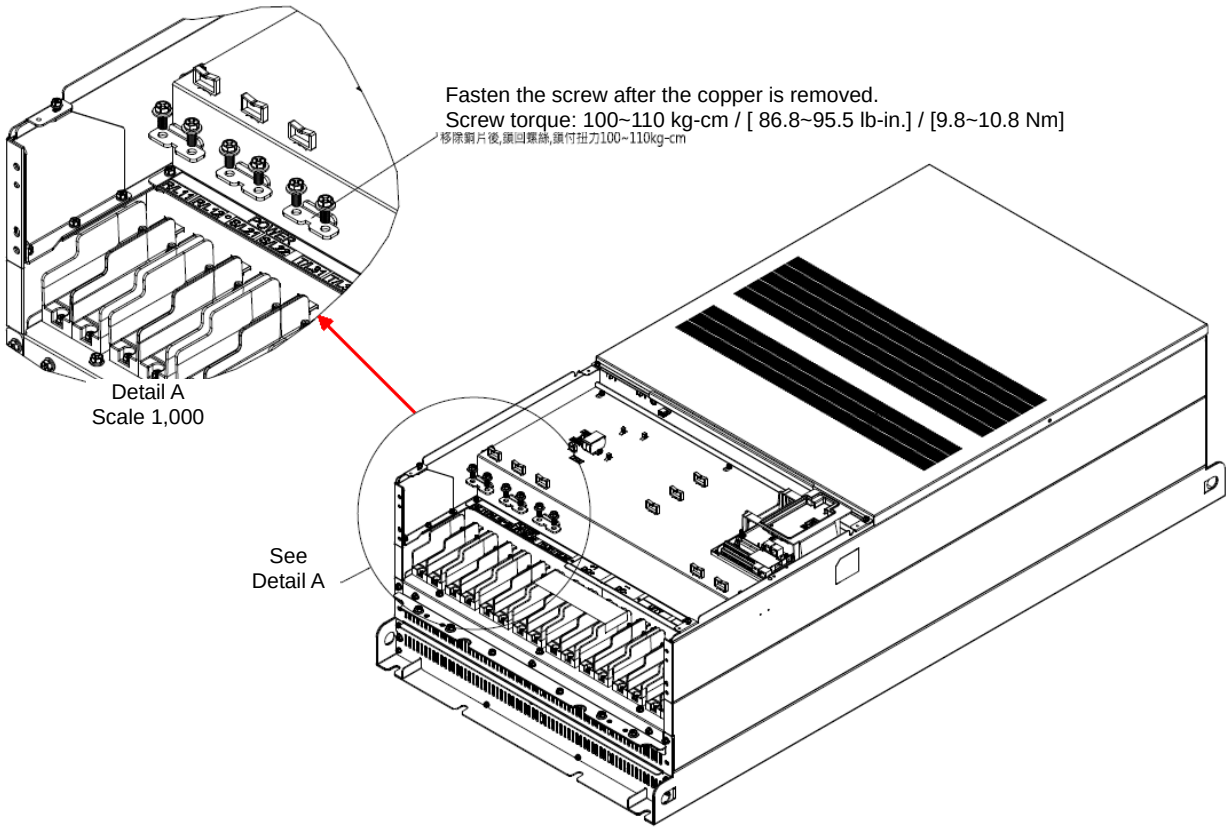

| Terminals | Descriptions |
|---|---|
| R/L1, S/L2, T/L3 | AC line input terminals 3-phase |
| U/T1, V/T2, W/T3 | AC drive output terminals for connecting 3-phase induction motor |
| +1, +2 | Applicable to frame A~C<br>Connections for DC reactor to improve the power factor. It needs to remove the jumper for installation. |
| +1/DC+, -/DC- | Connections for brake unit (VFDB series)<br>(for 230V models: ≦22kW, built-in brake unit)<br>(for 460V models: ≦30kW, built-in brake unit)<br>(for 690V models: ≦37kW, built-in brake unit)<br>Common DC Bus |
| B1, B2 | Connections for brake resistor (optional) |
| ⏚ | Earth connection, please comply with local regulations. |

## 5-2 Main Circuit Terminals

Frame A

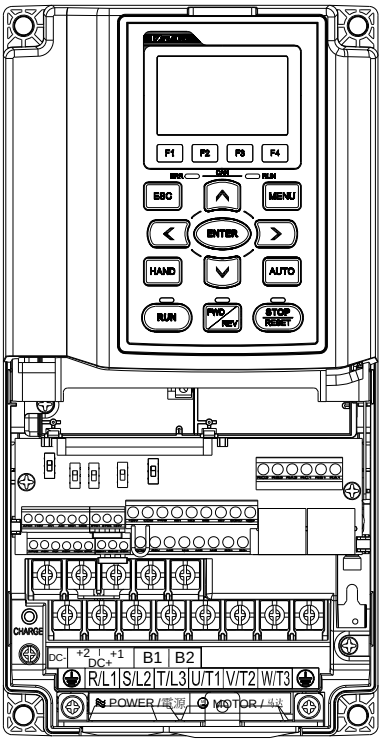


Main circuit terminals:
R/L1, S/L2, T/L3, U/T1, V/T2, W/T3, ⏚, B1, B2, +1, +2, -

| Models | Max. Wire Gauge | Min. Wire Gauge | Screw Spec. | Torque (±10%) |
|---|---|---|---|---|
| VFD007CP23A-21 | 8 AWG [8.4mm$^2$] | 14 AWG [2.1mm$^2$] | M4 | 20kg-cm [17.4 lb-in.] [1.962Nm] |
| VFD015CP23A-21 | | | | |
| VFD022CP23A-21 | | 12 AWG [3.3mm$^2$] | | |
| VFD037CP23A-21 | | 10 AWG [5.3mm$^2$] | | |
| VFD055CP23A-21 | | | | |
| VFD007CP43A-21 | | 14 AWG [2.1mm$^2$] | | |
| VFD015CP43B-21 | | | | |
| VFD022CP43B-21 | | | | |
| VFD037CP43B-21 | | | | |
| VFD040CP43A-21 | | 12 AWG [3.3mm$^2$] | | |
| VFD055CP43B-21 | | 10 AWG [5.3mm$^2$] | | |
| VFD075CP43B-21 | | | | |
| VFD007CP4EA-21 | | 14 AWG [2.1mm$^2$] | | |
| VFD015CP4EB-21 | | | | |
| VFD022CP4EB-21 | | | | |
| VFD037CP4EB-21 | | | | |
| VFD040CP4EA-21 | | 12 AWG [3.3mm$^2$] | | |
| VFD055CP4EB-21 | | 10 AWG [5.3mm$^2$] | | |
| VFD075CP4EB-21 | | | | |
| VFD015CP53A-21 | | 14 AWG [2.1mm$^2$] | | |
| VFD022CP53A-21 | | | | |
| VFD037CP53A-21 | | | | |
| UL installations must use 600V, 75 °C or 90 °C wire.Use copper wire only. | | | | |

1. Figure 1 shows the terminal specification.
2. Figure 2 shows the specification of insulated heat shrink tubing that comply with UL (600V, YDPU2).

Figure 1

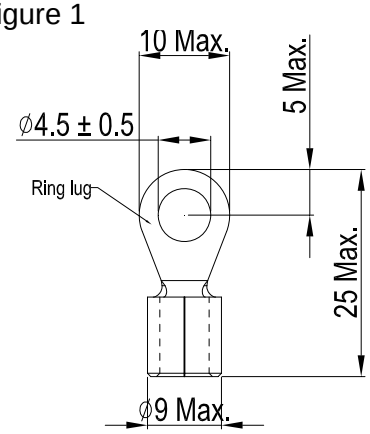


Figure 2

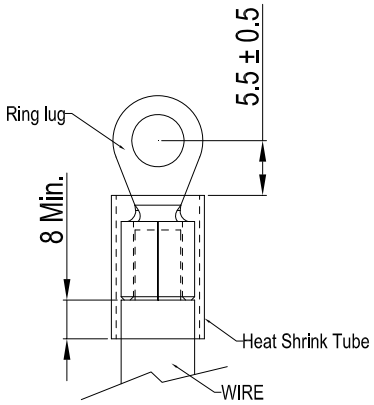


Unit: mm

## Frame B

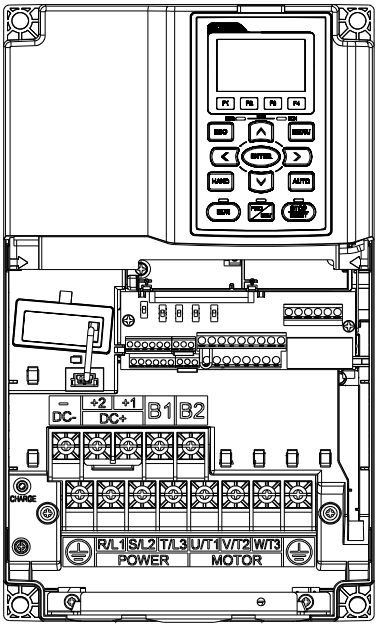


Main circuit terminals:
R/L1, S/L2, T/L3, U/T1, V/T2, W/T3, ⏚, B1, B2, +1, +2, -

| Models | Max. Wire Gauge | Min. Wire Gauge | Screw Spec. | Torque (±10%) |
|---|---|---|---|---|
| VFD075CP23A-21 | 4 AWG [21.2mm$^2$] | 8 AWG [8.4mm$^2$] | M5 | 35kg-cm [30.4 lb-in.] [3.434Nm] |
| VFD110CP23A-21 | | 6 AWG [13.3mm$^2$] | | |
| VFD150CP23A-21 | | 4 AWG [21.2mm$^2$] | | |
| VFD110CP43B-21 | | 8 AWG [8.4mm$^2$] | | |
| VFD150CP43B-21 | | | | |
| VFD185CP43B-21 | | 6 AWG [13.3mm$^2$] | | |
| VFD110CP4EB-21 | | 8 AWG [8.4mm$^2$] | | |
| VFD150CP4EB-21 | | | | |
| VFD185CP4EB-21 | | 6 AWG [13.3mm$^2$] | | |
| VFD055CP53A-21 | | 10 AWG [5.3mm$^2$] | | |
| VFD075CP53A-21 | | | | |
| VFD110CP53A-21 | | 8 AWG [8.4mm$^2$] | | |
| VFD150CP53A-21 | | | | |
| UL installations must use 600V,75 $^o$C or 90 $^o$C wire.Use copper wire only. | | | | |

**NOTE**

Terminal D+ [+2 & +1]: Torque: 45 kg-cm [39.0 lb-in.][4.415Nm] (±10%)

1. VFD150CP23A-21 must use 600V, 90 $^o$C wire when surrounding temperature exceeds 45 $^o$C.
2. Figure 1 shows the terminal specification.
3. Figure 2 shows the specification of insulated heat shrink tubing that comply with UL (600V, YDPU2).

Figure 1

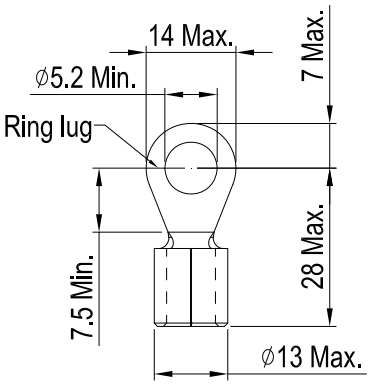


Figure 2

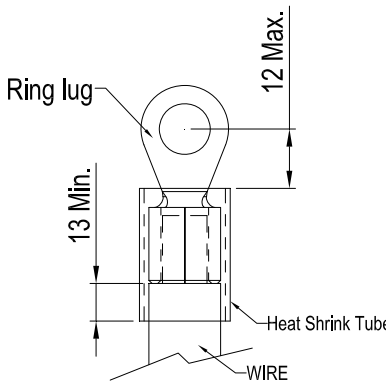


Unit: mm

Frame C

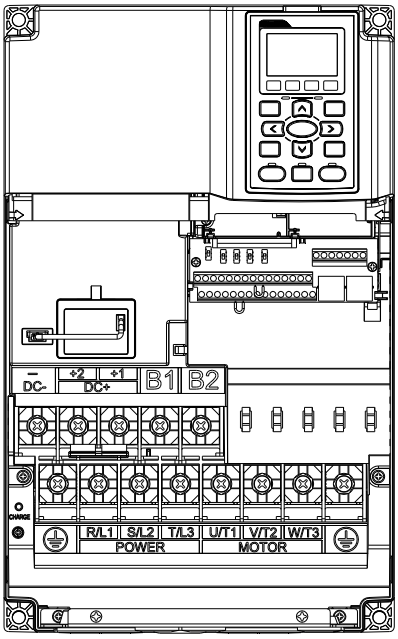


Main circuit terminals:
R/L1, S/L2, T/L3, U/T1, V/T2, W/T3, ⏚, B1, B2, +1, +2, -

| Models | Max. Wire Gauge | Min. Wire Gauge | Screw Spec. | Torque (±10%) |
|---|---|---|---|---|
| VFD185CP23A -21 | 1/0 AWG [53.5mm$^2$] | 1 AWG [42.4mm$^2$] | M8 | 80kg-cm [69.4 lb-in.] [7.85Nm] |
| VFD220CP23A-21 | | 1/0 AWG [53.5mm$^2$] | | |
| VFD300CP23A-21 | | | | |
| VFD220CP43A-21 | | 4 AWG [21.2mm$^2$] | | |
| VFD300CP43B-21 | | 3 AWG [26.7mm$^2$] | | |
| VFD370CP43B-21 | | 2 AWG [33.6mm$^2$] | | |
| VFD220CP4EB-21 | | 4 AWG [21.2mm$^2$] | | |
| VFD300CP4EB-21 | | 3 AWG [26.7mm$^2$] | | |
| VFD370CP4EB-21 | | 2 AWG [33.6mm$^2$] | | |
| VFD185CP63A-21 | | 8 AWG [8.4mm$^2$] | | |
| VFD220CP63A-21 | | 6 AWG [13.3mm$^2$] | | |
| VFD300CP63A-21 | | 4 AWG [21.2mm$^2$] | | |
| VFD370CP63A-21 | | 3 AWG [26.7mm$^2$] | | |
| UL installations must use 600V, 75 °C or 90 °C wire. Use copper wire only. | | | | |

**NOTE**

Terminal D+ [+2 & +1]: Torque: 90 kg-cm [78.2 lb-in.][8.83Nm] (±10%)

1. VFD300CP23A-21 must use 600V, 90 °C wire when surrounding temperature exceeds 40 °C.
2. Figure 1 shows the terminal specification.
3. Figure 2 shows the specification of insulated heat shrink tubing that comply with UL (600V, YDPU2).

Figure 1

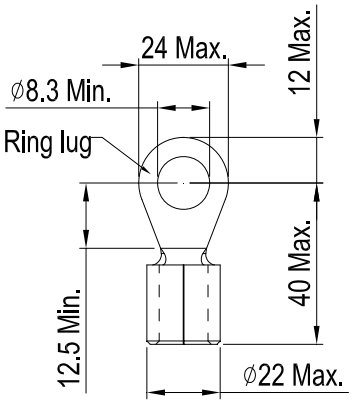


Figure 2

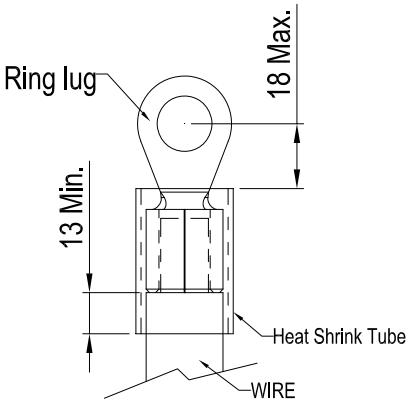


Unit: mm

## Frame D0

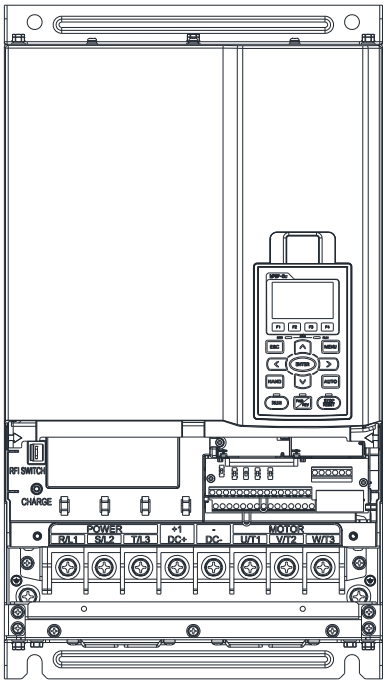


Main circuit terminals:

R/L1, S/L2, T/L3, U/T1, V/T2, W/T3, ⏚, +1/DC+, -/DC-

| Models | Max. Wire Gauge | Min. Wire Gauge | Screw Spec. | Torque (±10%) |
|---|---|---|---|---|
| VFD450CP43S-00 | 2/0 AWG [67.4mm$^2$] | 1/0 AWG [53.5mm$^2$] | M8 | 80kg-cm [70 lb-in.] [7.85Nm] |
| VFD550CP43S-00 | | 2/0 AWG [67.4mm$^2$] | | |
| VFD450CP43S-21 | | 1/0 AWG [53.5mm$^2$] | | |
| VFD550CP43S-21 | | 2/0 AWG [67.4mm$^2$] | | |

1. UL installations must use 600V, 75 $^{o}$C or 90 $^{o}$C wire. Use copper wire only.
2. Specification of grounding wire: 2AWG*2[33.6mm2*2]
3. Figure on the below shows the specification of insulated heat shrink tubing that comply with UL (600V, YDPU2).

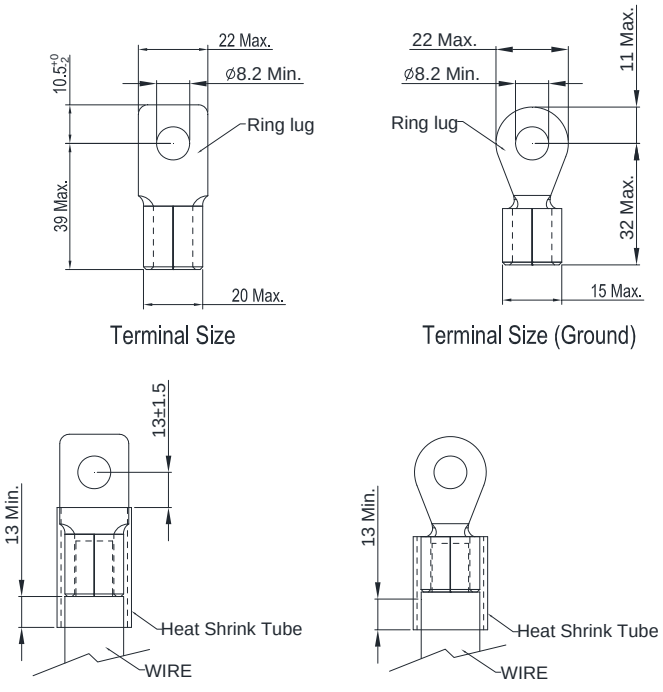


Unit: mm

Frame D

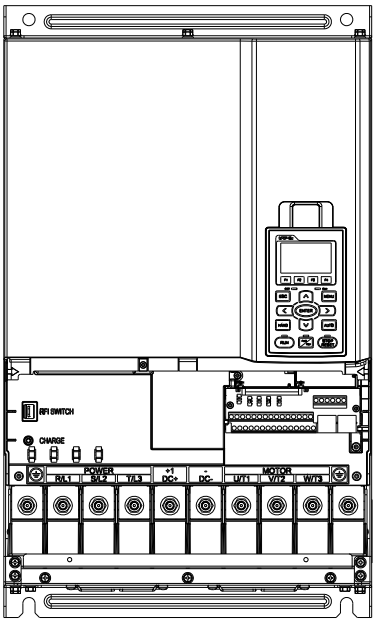


Main circuit terminals:

R/L1, S/L2, T/L3, U/T1, V/T2, W/T3, ⏚, +1/DC+, -/DC-

| Models | Max. Wire Gauge | Min. Wire Gauge | Screw Spec. | Torque (±10%) |
|---|---|---|---|---|
| VFD370CP23A-00 | 300MCM [152mm$^2$] | 4/0AWG [107mm$^2$] | M8 | 200kg-cm [173 lb-in.] [19.62Nm] |
| VFD450CP23A-00 | | 300MCM[152mm$^2$] | | |
| VFD750CP43A-00 | | 4/0AWG[107mm$^2$] | | |
| VFD900CP43A-00 | | 300MCM[152mm$^2$] | | |
| VFD370CP23A-21 | 4/0 AWG. [107mm$^2$] | 4/0AWG[107mm$^2$] | | |
| VFD450CP23A-21 | | 4/0AWG[107mm$^2$] | | |
| VFD750CP43A-21 | | 4/0AWG[107mm$^2$] | | |
| VFD900CP43A-21 | | 4/0AWG [107mm$^2$] | | |
| VFD450CP63A-00 | | 3 AWG [26.7mm$^2$] | | |
| VFD550CP63A-00 | | 2 AWG [33.6mm$^2$] | | |
| VFD450CP63A-21 | | 3 AWG [26.7mm$^2$] | | |
| VFD550CP63A-21 | | 2 AWG [33.6mm$^2$] | | |

1. UL installations must use 600V, 75 $^{o}$C or 90 $^{o}$C wires. Use copper wire only.
2. VFD450CP23A-21, VFD900CP43A-21 must use 600V, 90 $^{o}$C wire when surrounding temperature exceeds 40 $^{o}$C.
3. Figure 1 shows the terminal specification.
4. Figure 2 shows the specification of insulated heat shrink tubing that comply with UL (600V, YDPU2).

Figure 1

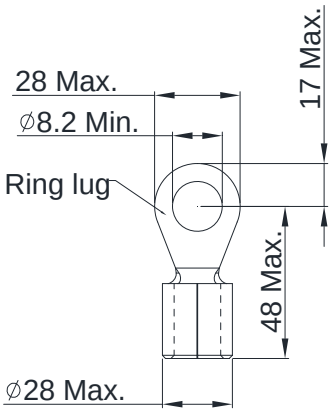


Figure 2

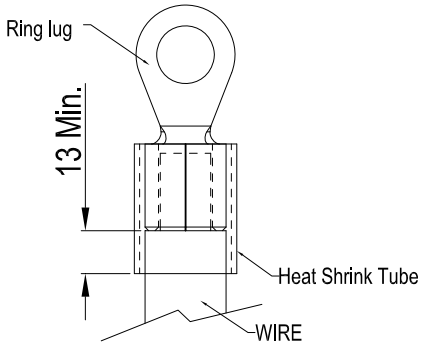


Unit: mm

## Frame E

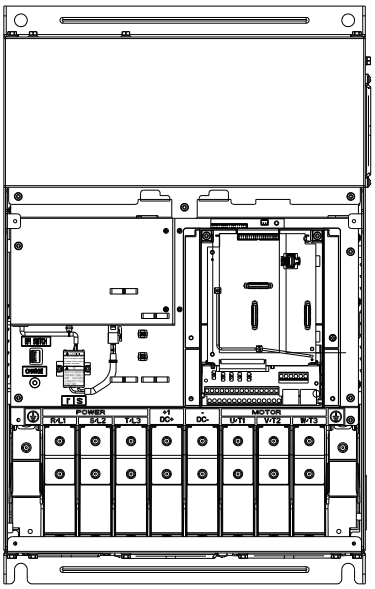


Main circuit terminals:
R/L1, S/L2, T/L3, U/T1, V/T2, W/T3, ⏚, +1/DC+, -/DC-

| Models | Max. Wire Gauge | Min. Wire Gauge | Screw Spec. | Torque (±10%) |
|---|---|---|---|---|
| VFD550CP23A-00 | 300MCM*2 [152mm$^2$*2] | 2/0AWG*2 [67.4mm$^2$*2] | M8 | 200kg-cm [173 lb-in.] [19.62Nm] |
| VFD750CP23A-00 | | 3/0AWG*2 [85mm$^2$*2] | | |
| VFD900CP23A-00 | | 4/0 AWG*2 [107mm$^2$*2] | | |
| VFD1100CP43A-00 | | 2/0AWG*2 [67.4mm$^2$*2] | | |
| VFD550CP23A-21 | 4/0 AWG*2 [107mm$^2$*2] | 2/0AWG*2 [67.4mm$^2$*2] | | |
| VFD750CP23A-21 | | 3/0AWG*2 [85mm$^2$*2] | | |
| VFD900CP23A-21 | | 4/0 AWG*2 [107mm$^2$*2] | | |
| VFD1100CP43A-21 | | 2/0AWG*2 [67.4mm$^2$*2] | | |
| VFD1320CP23A-21 | | | | |
| VFD750CP63A-00 | | 4 AWG*2 [21.15mm$^2$*2] | | |
| VFD900CP63A-00 | | 3 AWG*2 [26.67mm$^2$*2] | | |
| VFD1100CP63A-00 | | 2 AWG*2 [33.60mm$^2$*2] | | |
| VFD1320CP63A-00 | | 1 AWG*2 [42.41mm$^2$*2] | | |
| VFD750CP63A-21 | | 4 AWG*2 [21.15mm$^2$*2] | | |
| VFD900CP63A-21 | | 3 AWG*2 [26.67mm$^2$*2] | | |
| VFD1100CP63A-21 | | 2 AWG*2 [33.69mm$^2$*2] | | |
| VFD1320CP63A-21 | | 1 AWG*2 [42.41mm$^2$*2] | | |

1. UL installations must use 600V, 75°C or 90 °C wires. Use copper wire only.
2. Figure 1 shows the specification for ring lug.
3. Figure 3 shows the specification of insulated heat shrink tubing that comply with UL (600C, YDPU2).

Figure 1

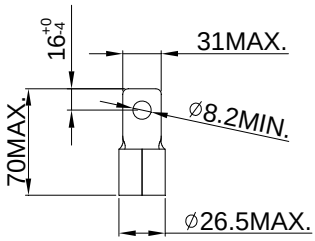


Figure 2

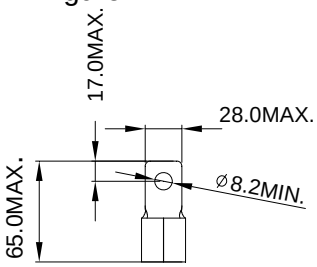


Figure 3

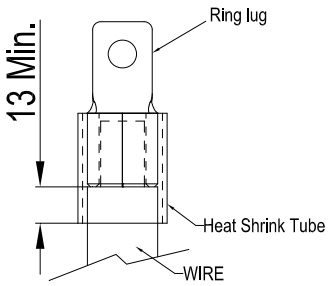


Unit: mm

Frame F

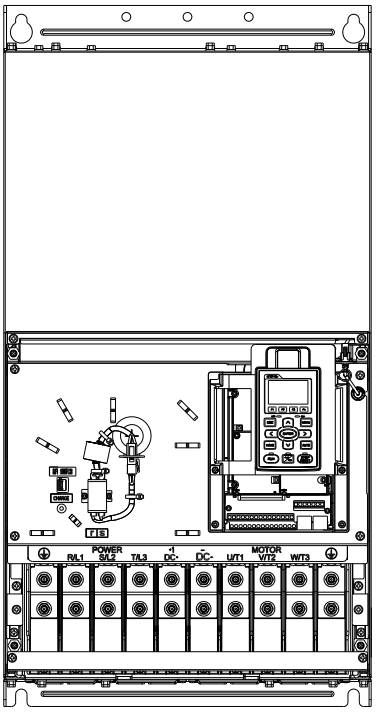


Main circuit terminals:
R/L1, S/L2, T/L3, U/T1, V/T2, W/T3, +1/DC+, -/DC-

| Models | Max. Wire Gauge | Min. Wire Gauge | Screw Spec. | Torque (±10%) |
|---|---|---|---|---|
| VFD1600CP43A-00 | 300MCM*2 [152mm$^2$*2] | 4/0 AWG*2 (107mm$^2$*2) | M8 | 200kg-cm [173 lb-in.] [19.62Nm] |
| VFD1850CP43A-00 | | 300MCM*2 (152mm$^2$) | | |
| VFD1600CP43A-21 | 4/0 AWG*2 [107mm$^2$*2] | 4/0 AWG*2 (107mm$^2$*2) | | |
| VFD1850CP43A-21 | | 4/0 AWG*2 (107mm$^2$*2) | | |
| VFD1600CP63A-00 | | 2/0AWG*2 [67.4mm$^2$*2] | | |
| VFD2000CP63A-00 | | 3/0AWG*2 [85mm$^2$*2] | | |
| VFD1600CP63A-21 | | 2/0AWG*2 [67.4mm$^2$*2] | | |
| VFD2000CP63A-21 | | 3/0AWG*2 [85mm$^2$*2] | | |

1. VFD1850CP43A-21 installations must use 90 °C wire.
2. For other model, UL installations must use 600V, 75 °C or 90 °C wire. Use copper wire only.
3. Figure 1 shows the specification for ring lug.
4. Figure 2 shows the specification of insulated heat shrink tubing that comply with UL (600C, YDPU2).

Figure 1

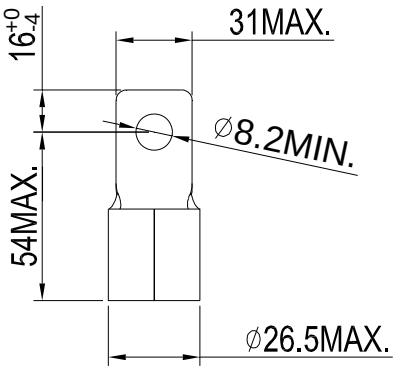


Figure 2

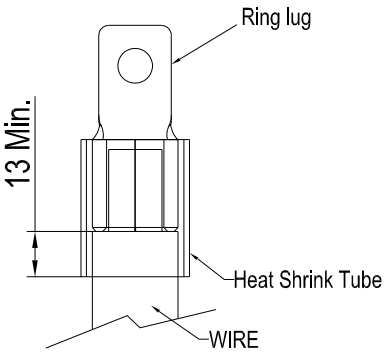


Unit: mm

## Frame G

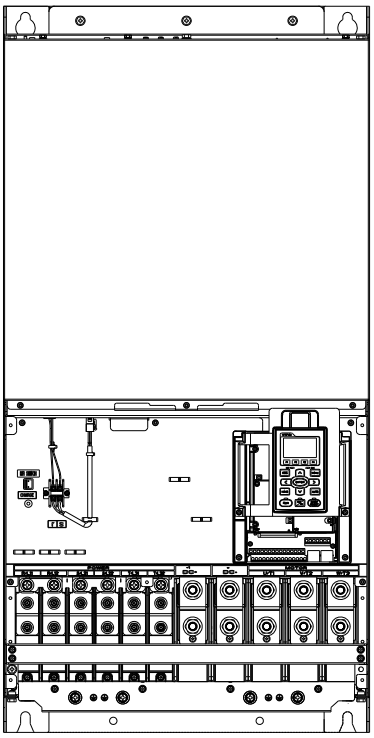

### Main circuit terminals:
R/L11, R/L12, S/L21, S/L22, T/L31, T/L32

| Models | Max. Wire Gauge | Min. Wire Gauge | Screw Spec. | Torque (±10%) |
|---|---|---|---|---|
| VFD2200CP43A-00 | 300MCM*4 [152mm$^2$*4] | 2/0AWG*4[67.4mm$^2$*4] | M8 | 200kg-cm [173 lb-in.] [19.62Nm] |
| VFD2800CP43A-00 | | 3/0AWG*4[85mm$^2$*4] | | |
| VFD2200CP43A-21 | | 2/0AWG*4[67.4mm$^2$*4] | | |
| VFD2800CP43A-21 | | 3/0AWG*4[85mm$^2$*4] | | |
| VFD2500CP63A-00 | | 1 AWG*2 [42.41mm$^2$*2] | | |
| VFD3150CP63A-00 | | 1/0 AWG*2[55.50mm$^2$*2] | | |
| VFD2500CP63A-21 | | 1 AWG*2 [42.41mm$^2$*2] | | |
| VFD3150CP63A-21 | | 1/0 AWG*2[55.50mm$^2$*2] | | |

### Main circuit terminals:
U/T1, V/T2, W/T3, +1/DC+, -/DC-

| Models | Max. Wire Gauge | Min. Wire Gauge | Screw Spec. | Torque (±10%) |
|---|---|---|---|---|
| VFD2200CP43A-00 | 500MCM*2 [253mm$^2$*2] | 400MCM*2[203mm$^2$*2] | M12 | 408kg-cm [354 lb-in.] [40Nm] |
| VFD2800CP43A-00 | | 500MCM*2 [253mm$^2$*2] | | |
| VFD2200CP43A-21 | | 400MCM*2 [203mm$^2$*2] | | |
| VFD2800CP43A-21 | | 500MCM*2 [253mm$^2$*2] | | |
| VFD2500CP63A-00 | | 250MCM*2 [127mm$^2$*2] | | |
| VFD3150CP63A-00 | | 350MCM*2 [177mm$^2$*2] | | |
| VFD2500CP63A-21 | | 250MCM*2 [127mm$^2$*2] | | |
| VFD3150CP63A-21 | | 350MCM*2 [177mm$^2$*2] | | |

1. UL installations must use 600V, 75 $^{o}$C or 90 $^{o}$C wire. Use copper wire only.
2. Figure 1 and Figure 2 show the specification for using ring lug.
3. Specification for grounding wire: 300MCM*4 [152 mm2*4]
4. Torque: M8 200kg-cm (173 lb-in.) (19.62Nm) (±10%), as shown in Figure 1
5. Figure 3 and Figure 4 shows the specification of insulated heat shrink tubing that comply with UL (600C, YDPU2).

Figure 1
R/L11, R/L12, S/L21, S/L22, T/L31, T/L32,

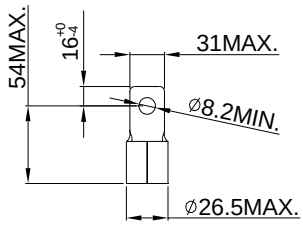


Figure2
U/T1, V/T2, W/T3, +1/DC+, -/DC-

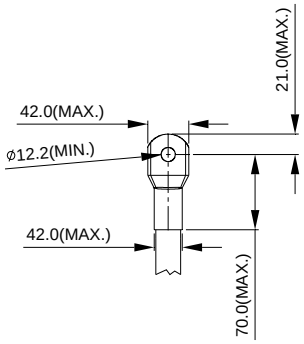


Figure 3

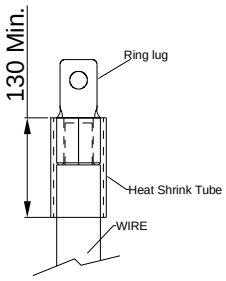


Figure 4

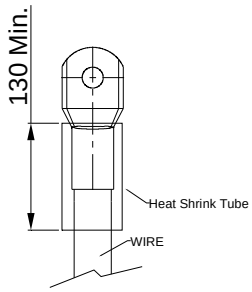


Unit: mm

Frame H

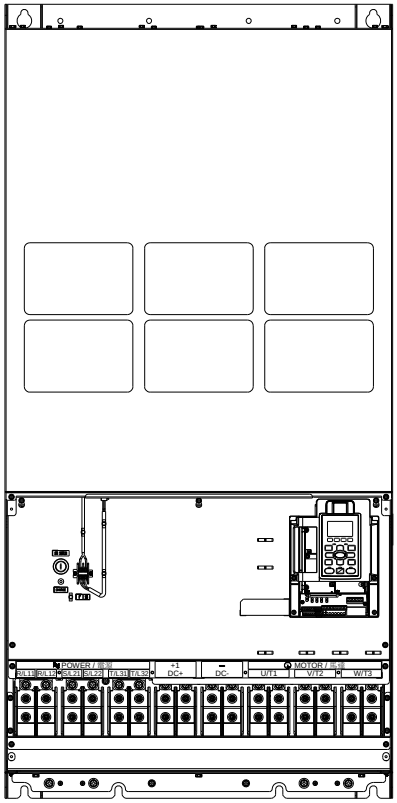


Main circuit terminals:

R/11,R12,S/21,S/22,T/31,T/32, U/T1,V/T2, W/T3, +1/DC+, -/DC-⏚

| Models | Max. Wire Gauge | Min. Wire Gauge | Screw Spec. | Torque (±10%) |
|---|---|---|---|---|
| VFD3150CP43A-00 | 300MCM*4 [152mm$^2$*4] | 4/0 AWG*4[107mm$^2$*4] | M8 | 200kg-cm [173 lb-in.] [19.62Nm] |
| VFD3550CP43A-00 | | 250MCM*4 [127mm$^2$*4] | | |
| VFD4000CP43A-00 | | 300MCM*4 [152mm$^2$*4] | | |
| VFD5000CP43A-00 | | 300MCM*4 [152mm$^2$*4] | | |
| VFD3150CP43C-00 | | 4/0 AWG*4 [107mm$^2$*4] | | |
| VFD3550CP43C-00 | | 250MCM*4 [127mm$^2$*4] | | |
| VFD4000CP43C-00 | | 300MCM*4 [152mm$^2$*4] | | |
| VFD5000CP43C-00 | | 300MCM*4 [152mm$^2$*4] | | |
| VFD3150CP43C-21 | | 4/0 AWG*4 [107mm$^2$*4] | | |
| VFD3550CP43C-21 | | 250MCM*4 [127mm$^2$*4] | | |
| VFD4000CP43C-21 | | 300MCM*4 [152mm$^2$*4] | | |
| VFD5000CP43C-21 | | 300MCM*4 [152mm$^2$*4] | | |
| VFD4000CP63A-00 | | 3/0 AWG*4[84.95mm$^2$*4] | | |
| VFD4500CP63A-00 | | 3/0 AWG*4[84.95mm$^2$*4] | | |
| VFD5600CP63A-00 | | 250MCM*4[127mm$^2$*4] | | |
| VFD6300CP63A-00 | | 300MCM*4[152mm$^2$*4] | | |
| VFD4000CP63A-21 | | 3/0 AWG*4[84.95mm$^2$*4] | | |
| VFD4500CP63A-21 | | 3/0 AWG*4[84.95mm$^2$*4] | | |
| VFD5600CP63A-21 | | 250MCM*4 [127mm$^2$*4] | | |
| VFD6300CP63A-21 | | 300MCM*4 [152mm$^2$*4] | | |

1. VFD5000CP43A-00, VFD5000CP43C-00 installations must use 90℃ wire.
2. UL installations must use 600V, 75 °C or 90 °C wire. Use copper wire only.
3. Figure 1 shows the specification for using the ring lug.
4. Specification of grounding wire ⏚: 300MCM*4 [152 mm$^2$*4], Torque: M8 200kg-cm [173 lb-in.] [19.62Nm] (±10%), as shown in figure 1.
5. Figure 2 shows the specification of heat shrink tubing that comply with UL (600C, YDPU2).

Figure 1

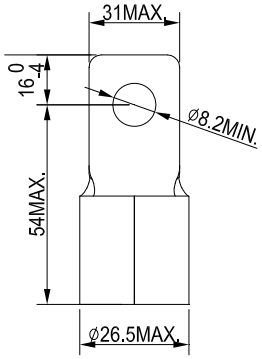


Figure 2

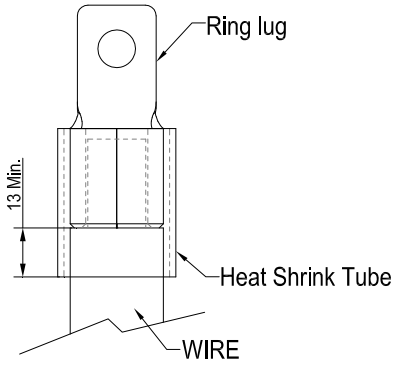


Unit: mm

[This page intentionally left blank]

# *Chapter 6 Control Terminals*

6-1 Remove the Cover for Wiring

6-2 Specifications of Control Terminal

6-3 Remove the Terminal Block

**CAUTION**

## Analog input terminals (AVI1, AVI2, ACI, ACM)

☑ Analog input signals are easily affected by external noise. Use shielded wiring and keep it as short as possible (<20m) with proper grounding. If the noise is inductive, connecting the shield to terminal ACM can bring improvement.

☑ When using analog input signal in the circuit, twisted pair is suggested to use for dealing with weak signal.

☑ If the analog input signals are affected by noise from the AC motor drive, please connect a capacitor and ferrite core as indicated in the following diagram.

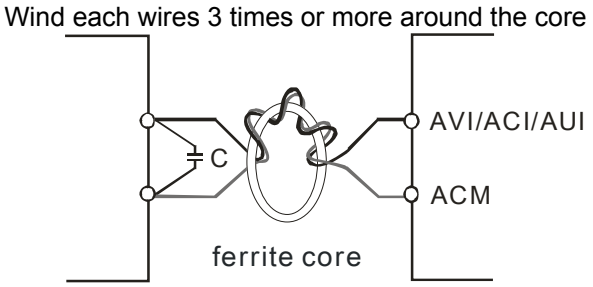


## Digital inputs (FWD, REV, MI1~MI8, COM)

☑ When using contacts or switches to control the digital inputs, please use high quality components to avoid contact bounce.

☑ The "COM" terminal is the common side of the photo-coupler. Any of wiring method, the "common point" of all photo-coupler must be the "COM".

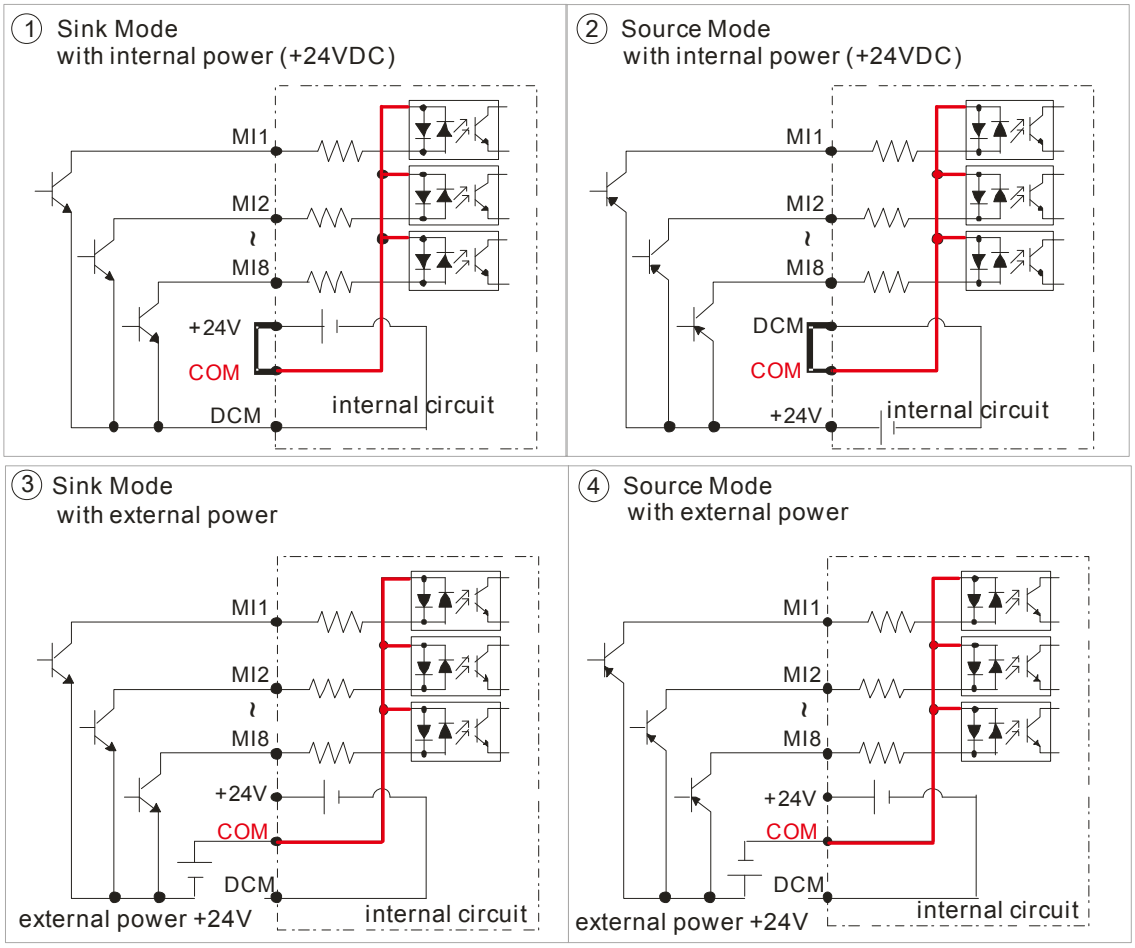

| | |
|---|---|
| | ☑ When the photo-coupler is using internal power supply, the switch connection for Sink and Source as below:<br>“MI” links to “DCM”: Sink mode<br>“MI” links to “+24V”: Source mode<br>☑ When the photo-coupler is using external power supply, please remove the short circuit cable between the +24V and COM terminals. The connection mode is Sink mode or Source mode is according to the below:<br>The “+” of 24V connecting to “COM: Sink mode<br>The “-“ of 24V connecting to COM: Source mode |

## 6-1 Remove the Cover for Wiring

Please remove the top cover before wiring the multi-function input and output terminals,

NOTE The drive appearances shown in the figures are for reference only, a real drive may look different.

Frame A & B

Screw torque: 12~15Kg-cm / [10.4~13lb-in.] / [1.2~1.5 Nm]

Loosen the screw and press the tabs on both sides to remove the cover.

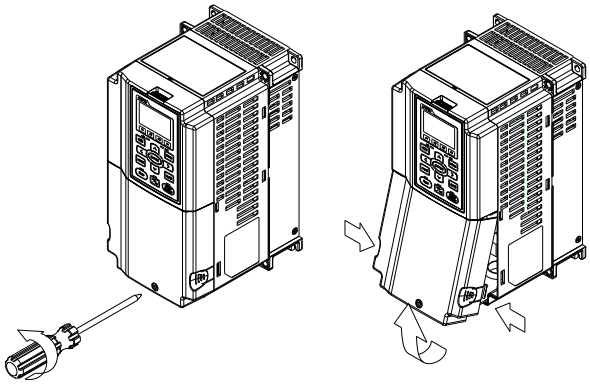

Frame C

Screw torque: 12~15Kg-cm / [10.4~13lb-in.] / [1.2~1.5 Nm]

Loosen the screws and press the tabs on both sides to remove the cover.

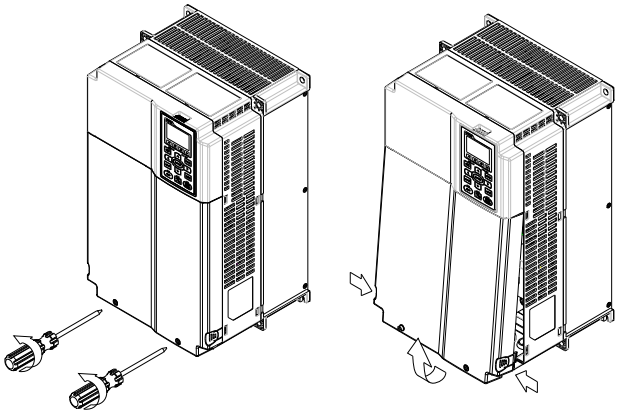

Frame D0 & D

Screw torque: 12~15Kg-cm / [10.4~13lb-in.] / [1.2~1.5 Nm]

To remove the cover, lift it slightly and pull outward.

Loosen the screws and press the tabs on both sides to remove the cover.

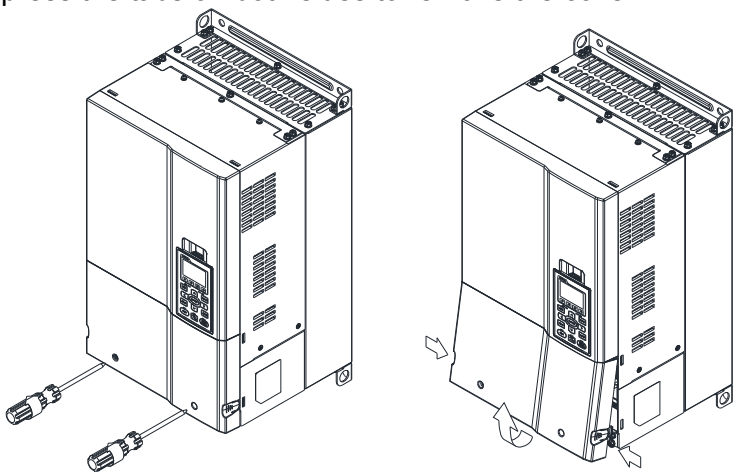

Frame E

Screw torque: 12~15Kg-cm / [10.4~13lb-in.] / [1.2~1.5 Nm]

To remove the cover, lift it slightly and pull outward.

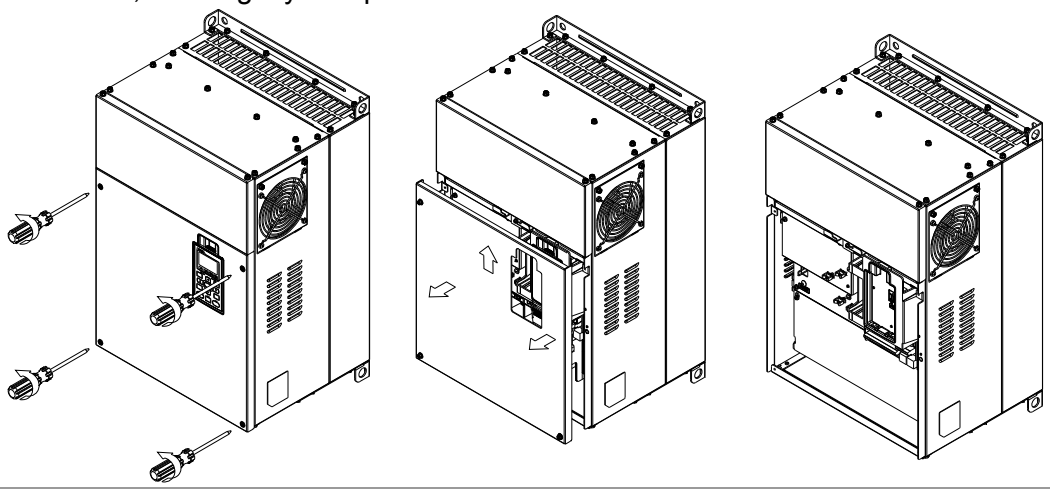

Frame F

Screw torque: 12~15Kg-cm / [10.4~13lb-in.] / [1.2~1.5 Nm]

To remove the cover, lift it slightly and pull outward

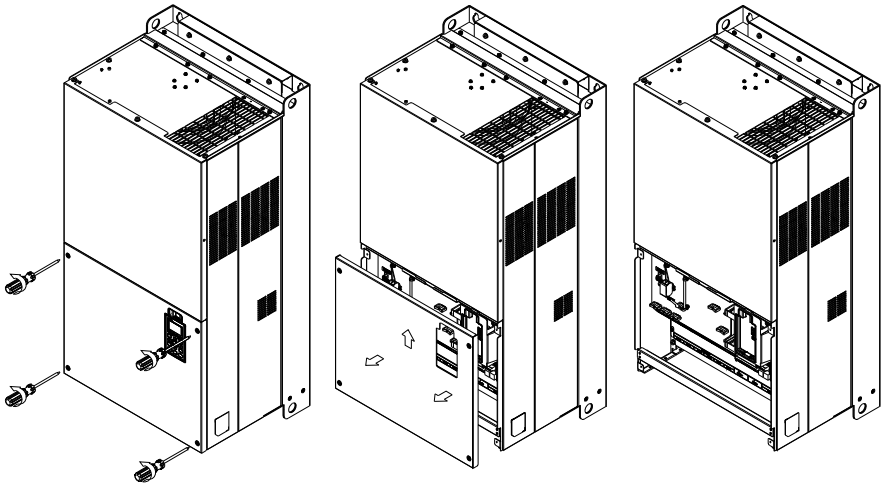

Frame G

Screw torque: 12~15Kg-cm / [10.4~13lb-in.] / [1.2~1.5 Nm]

To remove the cover, lift it slightly and pull outward

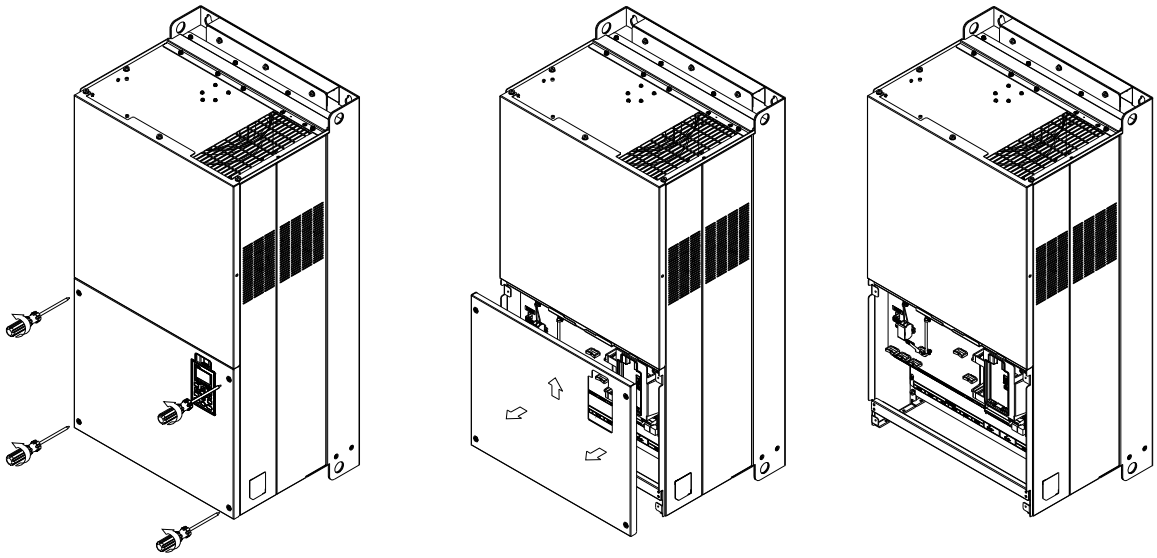

Frame H

Screw torque: 14~16Kg-cm / [12.15~13.89lb-in.] / [1.4~1.6 Nm]

To remove the cover, lift it slightly and pull outward

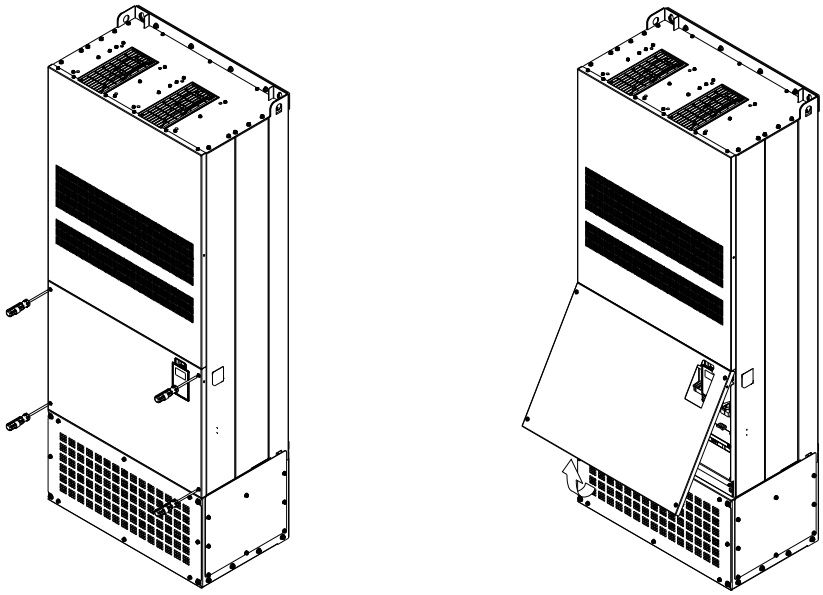

## 6-2 Specifications of Control Terminal

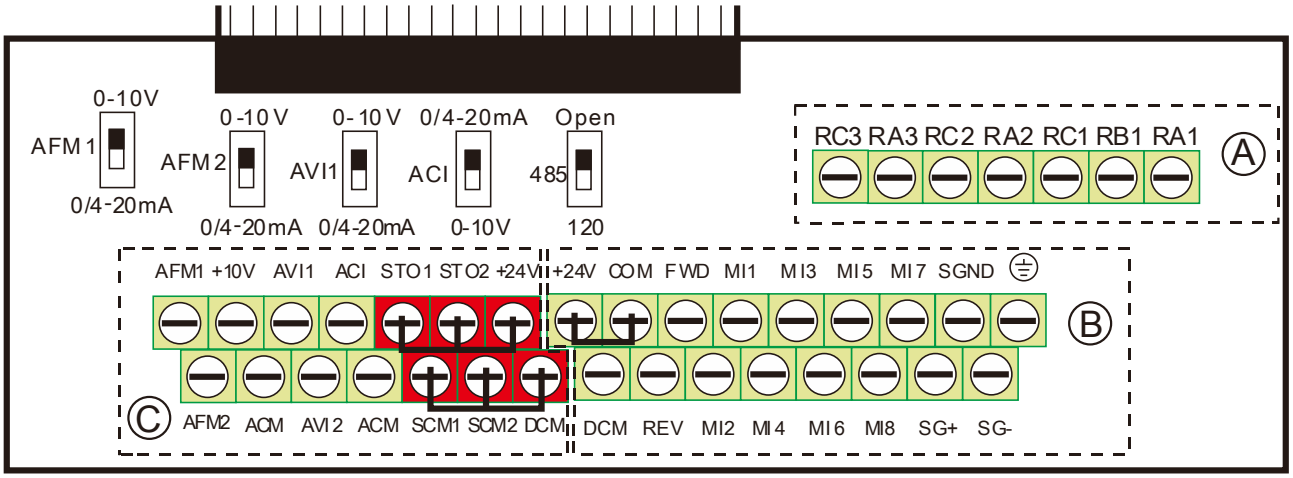


Removable Terminal Block

Wire Gauge: Ⓐ Ⓑ 26~16AWG [0.1281-1.318mm$^2$]; Ⓒ 30~14AWG

Torque: Ⓐ 5kg-cm / [4.3lb-in.] / [0.49Nm] (As shown in figure above)

Ⓑ 8kg-cm / [6.94lb-in.] / [0.78Nm] (As shown in figure above)

Ⓒ 2kg-cm / [1.73 lb-in.] / [0.19 Nm] (As shown in figure above)

Wiring precautions:

- In the figure above, the factory setting for STO1, STO2, +24V and SCM1, SCM2, DCM are short circuit. The factory setting for +24V-COM is short circuit and SINK mode (NPN); please refer to Chapter 4 Wiring for more detail.
- Tighten the wiring with slotted screwdriver, which is 3.5mm (wide) x 0.6mm (thick).
- The ideal length of stripped wire at the connection side is 5mm.
- When wiring bare wires, make sure they are perfectly arranged to go through the wiring holes.

| Terminals | Terminal Function | Factory Setting (NPN mode) |
|---|---|---|
| +24V | Digital control signal common (Source) | +24V±5% 200mA |
| COM | Digital control signal common (Sink) | Common for multi-function input terminals |
| FWD | Forward-Stop command | FWD-DCM:<br>ON➔ forward running<br>OFF➔ deceleration to stop |
| REV | Reverse-Stop command | REV-DCM:<br>ON➔ reverse running<br>OFF➔ deceleration to stop |
| MI1<br>~<br>MI8 | Multi-function input 1~8 | Refer to parameters 02-01~02-08 to program the multi-function inputs MI1~MI8.<br>Source Mode<br>ON: the activation current is 3.3mA≧11VDC<br>OFF: leakage current tolerance is ≦11VDC<br>Sink Mode<br>ON: the activation current is 3.3mA≧13VDC<br>OFF: leakage current tolerance is ≦19VDC |
| DFM | Digital frequency signal output<br>DFM<br>DCM | Regard the pulse as the output monitor signal<br>Duty-cycle: 50%<br>Min. load impedance: 1kΩ/100pf<br>Max. current: 30mA<br>Max. voltage: 30VDC |
| DCM | Digital frequency signal common | |

| Terminals | Terminal Function | Factory Setting (NPN mode) |
|---|---|---|
| RA1 | Multi-function relay output 1 (N.O.) a | Resistive Load:<br>3A(N.O.)/3A(N.C.) 250VAC<br>5A(N.O.)/3A(N.C.) 30VDC<br>Inductive Load (COS 0.4):<br>1.2A(N.O.)/1.2A(N.C.) 250VAC<br>2.0A(N.O.)/1.2A(N.C.) 30VDC<br>It is used to output each monitor signal, such as drive is in operation, frequency attained or overload indication. |
| RB1 | Multi-function relay output 1 (N.C.) b | |
| RC1 | Multi-function relay common | |
| RA2 | Multi-function relay output 2 (N.O.) a | |
| RC2 | Multi-function relay common | |
| +10V | Potentiometer power supply | Analog frequency setting: +10VDC 20mA |
| -10V | Potentiometer power supply | Analog frequency setting: -10VDC 20mA |
| AVI 1 | Analog voltage input<br> 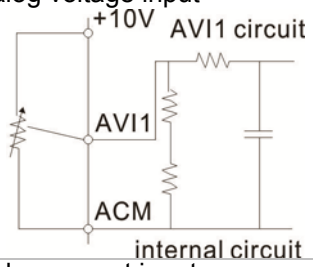 <br> | Impedance: 20kΩ<br>Range: 0~20mA/4~20mA/0~10V =0~Max. Output Frequency (Pr.01-00)<br>AVI1 switch, factory setting is 0~10V |
| ACI | Analog current input<br> 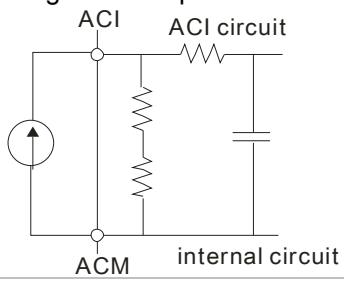 <br> | Impedance: 250Ω<br>Range: 0~20mA/4~20mA/0~10V = 0 ~ Max. Output Frequency (Pr.01-00)<br>ACI Switch, factory setting is 4~20mA |
| AVI2 | Auxiliary analog voltage input<br> 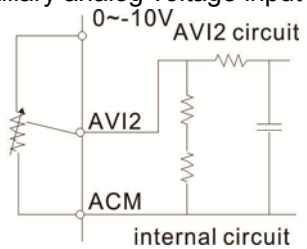 <br> | Impedance: 20kΩ<br>Range: 0~+10VDC=0 ~ Max. Output Frequency(Pr.01-00) |
| AFM1 | 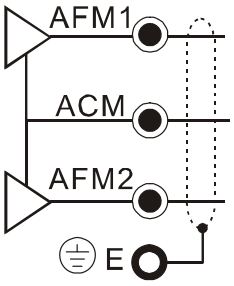 <br> | 0~10V Max. output current 2mA, Max. load 5kΩ<br>-10~10V maximum output current 2mA, maximum load 5kΩ<br>Output current: 2mA max<br>Resolution: 0~10V corresponds to Max. operation frequency<br>Range: 0~10V → -10~+10V<br>AFM 1 Switch, factory setting is 0~10V |
| AFM2 | | 0~10V Max. output current 2mA, Max. load 5kΩ<br>0~20mA Max. load 500Ω<br>Output current: 20mA max<br>Resolution: 0~10V corresponds to Max. operation frequency<br>Range: 0~10V → 4~20mA<br>AFM 2 Switch, factory setting is 0~10V |
| ACM | Analog Signal Common | Common for analog terminals |
| STO1 | Default setting is shorted | |
| SCM1 | Power removal safety function for EN954-1 and IEC/EN61508 | |
| STO2 | When STO1~SCM1; STO2~SCM2 is activated, the activation current is 3.3mA ≥ 11VDC | |
| SCM2 | Note: Please refer to CH 17 Safe Torque off Function. | |
| SG+ | MODBUS RS-485 | |
| SG- | Note: Please refer to CH12 DESCRIPTION OF PARAMETER SETTINGS group 09 | |
| SGND | Communication Parameters for more information. | |
| RJ-45 | PIN 1,2,7,8 : Reserved PIN 3, 6: SGND<br>PIN 4: SG- PIN 5: SG+ | |

NOTE: Wire size of analog control signals: 18 AWG (0.75 $mm^2$) with shielded wire

## 6-3 Remove the Terminal Block

1. Loosen the screws by screwdriver. (As shown in figure below).

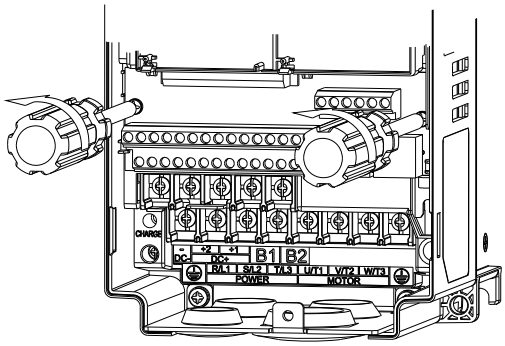


2. Remove the control board by pulling it out for a distance 6~8 cm (as 1 in the figure) then lift the control board upward (as 2 in the figure).

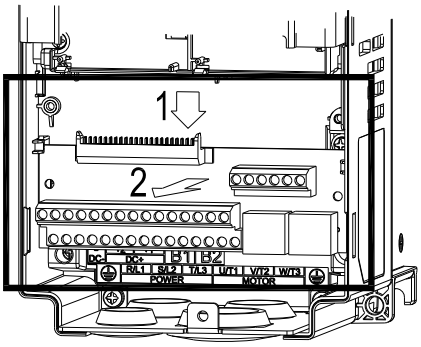

# *Chapter 7 Optional Accessories*

7-1 Brake Resistors and Brake Units Selection Chart

7-2 Non-fuse Circuit Breaker

7-3 Fuse Specification Chart

7-4 AC/DC Reactor

7-5 Zero Phase Reactor

7-6 EMC Filter

7-7 Digital Keypad

7-8 Panel Mounting

7-9 Conduit Box Kit

7-10 Fan Kit

7-11 Flange Mounting Kit

7-12 USB/RS-485 Communication Interface IF6530

The optional accessories listed in this chapter are available upon request. Installing additional accessories to your drive would substantially improve the drive's performance. Please select an applicable accessory according to your need or contact the local distributor for suggestion.

## 7-1 Brake Resistors and Brake Units Selection Chart

230V Model

| Applicable Motor | | *1 125% Braking Torque 10%ED | | | | | | *2 Max. Brake Torque | | |
|---|---|---|---|---|---|---|---|---|---|---|
| HP | kW | Braking Torque [kg-m] | Brake Unit *4VFDB | *3Braking Resistor series for each Brake Unit | | Resistor value spec. for each AC motor Drive | Total Braking Current [A] | Min. Resistor Value [Ω] | Max. Total Braking Current [A] | Peak Power [kW] |
| 1 | 0.7 | 0.5 | - | BR080W200*1 | | 80W200Ω | 1.9 | 63.3 | 6 | 2.3 |
| 2 | 1.5 | 1.0 | - | BR200W091*1 | | 200W91Ω | 4.2 | 47.5 | 8 | 3.0 |
| 3 | 2.2 | 1.5 | - | BR300W070*1 | | 300W70Ω | 5.4 | 38.0 | 10 | 3.8 |
| 5 | 3.7 | 2.5 | - | BR400W040*1 | | 400W40Ω | 9.5 | 19.0 | 20 | 7.6 |
| 7.5 | 5.5 | 3.7 | - | BR1K0W020*1 | | 1000W20Ω | 19 | 14.6 | 26 | 9.9 |
| 10 | 7.5 | 5.1 | - | BR1K0W020*1 | | 1000W20Ω | 19 | 14.6 | 26 | 9.9 |
| 15 | 11 | 7.5 | - | BR1K5W013*1 | | 1500W13Ω | 29 | 13.6 | 28 | 10.6 |
| 20 | 15 | 10.2 | - | BR1K0W4P3*2 | 2 series | 2000W8.6Ω | 44 | 8.3 | 46 | 17.5 |
| 25 | 18 | 12.2 | - | BR1K0W4P3*2 | 2 series | 2000W8.6Ω | 44 | 8.3 | 46 | 17.5 |
| 30 | 22 | 14.9 | - | BR1K5W3P3*2 | 2 series | 3000W6.6Ω | 58 | 5.8 | 66 | 25.1 |
| 40 | 30 | 20.3 | 2015*2 | BR1K0W5P1*2 | 2 series | 4000W5.1Ω | 75 | 4.8 | 80 | 30.4 |
| 50 | 37 | 25.1 | 2022*2 | BR1K2W3P9*2 | 2 series | 4800W3.9Ω | 97 | 3.2 | 120 | 45.6 |
| 60 | 45 | 30.5 | 2022*2 | BR1K5W3P3*2 | 2 series | 6000W3.3Ω | 118 | 3.2 | 120 | 45.6 |
| 75 | 55 | 37.2 | 2022*3 | BR1K2W3P9*2 | 2 series | 7200W2.6Ω | 145 | 2.1 | 180 | 68.4 |
| 100 | 75 | 50.8 | 2022*4 | BR1K2W3P9*2 | 2 series | 9600W2Ω | 190 | 1.6 | 240 | 91.2 |
| 125 | 90 | 60.9 | 2022*4 | BR1K5W3P3*2 | 2 series | 12000W 1.65Ω | 230 | 1.6 | 240 | 91.2 |

460V Model

| Applicable Motor | | *1 125%Braking Torque 10%ED | | | | | | *2 Max. Brake Torque | | |
|---|---|---|---|---|---|---|---|---|---|---|
| HP | kW | Braking Torque [kg-m] | Brake Unit *4VFDB | *3Braking Resistor series for each Brake Unit | | Resistor value spec. for each AC motor Drive | Total Braking Current [A] | Min. Resistor Value [Ω] | Max. Total Braking Current [A] | Peak Power [kW] |
| 1 | 0.7 | 0.5 | - | BR080W750*1 | | 80W750Ω | 1 | 190.0 | 4 | 3.0 |
| 2 | 1.5 | 1.0 | - | BR200W360*1 | | 200W360Ω | 2.1 | 126.7 | 6 | 4.6 |
| 3 | 2.2 | 1.5 | - | BR300W250*1 | | 300W250Ω | 3 | 108.6 | 7 | 5.3 |
| 5 | 3.7 | 2.5 | - | BR400W150*1 | | 400W150Ω | 5.1 | 84.4 | 9 | 6.8 |
| 5.5 | 4.0 | 2.7 | - | BR1K0W075*1 | | 1000W75Ω | 10.2 | 54.3 | 14 | 10.6 |
| 7.5 | 5.5 | 3.7 | | BR1K0W075*1 | | 1000W75Ω | 10.2 | 54.3 | 14 | 10.6 |
| 10 | 7.5 | 5.1 | - | BR1K0W075*1 | | 1000W75Ω | 10.2 | 47.5 | 16 | 12.2 |
| 15 | 11 | 7.5 | - | BR1K5W043*1 | | 1500W43Ω | 17.6 | 42.2 | 18 | 13.7 |
| 20 | 15 | 10.2 | - | BR1K0W016*2 | 2 series | 2000W32Ω | 24 | 26.2 | 29 | 22.0 |
| 25 | 18 | 12.2 | - | BR1K0W016*2 | 2 series | 2000W32Ω | 24 | 23.0 | 33 | 25.1 |
| 30 | 22 | 14.9 | - | BR1K5W013*2 | 2 series | 3000W26Ω | 29 | 23.0 | 33 | 25.1 |
| 40 | 30 | 20.3 | - | BR1K0W016*4 | 2 parallel, 2 series | 4000W16Ω | 47.5 | 14.1 | 54 | 41.0 |
| 50 | 37 | 25.1 | 4045*1 | BR1K2W015*4 | 2 parallel, 2 series | 4800W15Ω | 50 | 12.7 | 60 | 45.6 |
| 60 | 45 | 30.5 | 4045*1 | BR1K5W013*4 | 2 parallel, 2 series | 6000W13Ω | 59 | 12.7 | 60 | 45.6 |
| 75 | 55 | 37.2 | 4030*2 | BR1K0W5P1*4 | 4 series | 8000W10.2Ω | 76 | 9.5 | 80 | 60.8 |
| 100 | 75 | 50.8 | 4045*2 | BR1K2W015*4 | 2 parallel, 2 series | 9600W7.5Ω | 100 | 6.3 | 120 | 91.2 |
| 125 | 90 | 60.9 | 4045*2 | BR1K5W013*4 | 2 parallel, 2 series | 12000W6.5Ω | 117 | 6.3 | 120 | 91.2 |
| 150 | 110 | 74.5 | 4110*1 | BR1K2W015*10 | 5 parallel, 2 series | 12000W6Ω | 126 | 6.0 | 126 | 95.8 |

## 460V Model

| Applicable Motor | | *1 125%Braking Torque 10%ED | | | | | | *2 Max. Brake Torque | | |
|---|---|---|---|---|---|---|---|---|---|---|
| HP | kW | Braking Torque [kg-m] | Brake Unit | *3Braking Resistor series for each Brake Unit | | Resistor value spec. for each AC motor Drive | Total Braking Current [A] | Min. Resistor Value [Ω] | Max. Total Braking Current [A] | Peak Power [kW] |
| 175 | 132 | 89.4 | 4160*1 | BR1K5W012*12 | 6 parallel, 2 series | 18000W4Ω | 190 | 4.0 | 190 | 144.4 |
| 215 | 160 | 108.3 | 4160*1 | BR1K5W012*12 | 6 parallel, 2 series | 18000W4Ω | 190 | 4.0 | 190 | 144.4 |
| 250 | 185 | 125.3 | 4185*1 | BR1K5W012*14 | 7 parallel, 2 series | 21000W3.4Ω | 225 | 3.4 | 225 | 172.1 |
| 300 | 220 | 148.9 | 4110*2 | BR1K2W015*10 | 5 parallel, 2 series | 24000W3Ω | 252 | 3.0 | 252 | 190.5 |
| 375 | 280 | 189.6 | 4160*2 | BR1K5W012*12 | 6 parallel, 2 series | 36000W2Ω | 380 | 2.0 | 380 | 288.8 |
| 425 | 315 | 213.3 | 4160*2 | BR1K5W012*12 | 6 parallel, 2 series | 36000W2Ω | 380 | 2.0 | 380 | 288.8 |
| 475 | 355 | 240.3 | 4185*2 | BR1K5W012*14 | 7 parallel, 2 series | 42000W1.7Ω | 450 | 1.7 | 450 | 344.2 |
| 536 | 400 | 304.7 | 4185*3 | BR1K5W012*12 | 6 parallel, 2 series | 54000W 1.3Ω | 600 | 1.1 | 675 | 513.0 |
| 675 | 500 | 304.7 | 4185*3 | BR1K5W012*12 | 6 parallel, 2 series | 54000W 1.3Ω | 600 | 1.1 | 675 | 513.0 |

## 575V Model

| Applicable Motor | | *1 125%Braking Torque 10%ED | | | | | *2 Max. Brake Torque | | |
|---|---|---|---|---|---|---|---|---|---|
| LD | ND | Braking Torque [kg-m] | Brake Unit | *3Braking Resistor series for each Brake Unit | Resistor value spec. for each AC motor Drive | Total Braking Current [A] | Min. Resistor Value [Ω] | Max. Total Braking Current [A] | Peak Power [kW] |
| 1.5 | 0.75 | 0.5 | - | BR080W750*1 | 80W 750Ω | 1.2 | 280.0 | 4 | 4.5 |
| 2.2 | 1.5 | 1 | - | BR200W360*1 | 200W 360Ω | 2.6 | 186.7 | 6 | 6.7 |
| 3.7 | 2.2 | 1.5 | - | BR300W400*1 | 300W 400Ω | 2.3 | 160.0 | 7 | 7.8 |
| 5.5 | 3.7 | 2.5 | - | BR500W100*1 | 500W 100Ω | 9.2 | 93.3 | 12 | 13.4 |
| 7.5 | 5.5 | 3.7 | - | BR750W140*1 | 750W 140Ω | 6.6 | 80.0 | 14 | 15.7 |
| 11 | 7.5 | 5.1 | - | BR1K0W075*1 | 1000W 75Ω | 12.3 | 70.0 | 16 | 17.9 |
| 15 | 11 | 7.4 | - | BR1K1W091*1 | 1100W 91Ω | 10.1 | 62.2 | 18 | 20.2 |

## 690V Model

| Applicable Motor | | *1 125%Braking Torque 10%ED | | | | | | *2 Max. Brake Torque | | |
|---|---|---|---|---|---|---|---|---|---|---|
| LD | ND | Braking Torque [kg-m] | Brake Unit | *3Braking Resistor series for each Brake Unit | | Resistor value spec. for each AC motor Drive | Total Braking Current [A] | Min. Resistor Value [Ω] | Max. Total Braking Current [A] | Peak Power [kW] |
| 18.5 | 15 | 10.2 | - | BR1K0W039*2 | 2 series | 2000W 78Ω | 14.4 | 58.9 | 19 | 21.3 |
| 22 | 18.5 | 12.5 | - | BR1K2W033*2 | 2 series | 2400W 66Ω | 17.0 | 58.9 | 19 | 21.3 |
| 30 | 22 | 14.9 | - | BR1K5W027*2 | 2 series | 3000W 54Ω | 20.7 | 43.1 | 26 | 29.1 |
| 37 | 30 | 20.3 | - | BR1K2W015*3 | 3 series | 3600W 45Ω | 24.9 | 43.1 | 26 | 29.1 |
| 45 | 37 | 25 | 6055*1 | BR1K2W033*4 | 2 parallel, 2 series | 4800W 33Ω | 33.9 | 24.3 | 46 | 51.5 |
| 55 | 45 | 30.5 | 6055*1 | BR1K5W027*4 | 2 parallel, 2 series | 6000W 27Ω | 41.5 | 24.3 | 46 | 51.5 |
| 75 | 55 | 37.2 | 6110*1 | BR1K2W033*6 | 3 parallel, 2 series | 7200W 22Ω | 50.9 | 12.2 | 92 | 103.0 |
| 90 | 75 | 50.8 | 6110*1 | BR1K5W027*6 | 3 parallel, 2 series | 9000W 18Ω | 62.2 | 12.2 | 92 | 103.0 |
| 110 | 90 | 60.9 | 6110*1 | BR1K5W027*8 | 4 parallel, 2 series | 12000W 13.5Ω | 83.0 | 12.2 | 92 | 103.0 |
| 132 | 110 | 74.5 | 6160*1 | BR1K2W015*12 | 4 parallel, 3 series | 14400W 11.3Ω | 99.6 | 8.2 | 136 | 152.3 |

| Applicable Motor | | *1 125%Braking Torque 10%ED | | | | | | *2 Max. Brake Torque | | |
|---|---|---|---|---|---|---|---|---|---|---|
| LD | ND | Braking Torque [kg-m] | Brake Unit | *3Braking Resistor series for each Brake Unit | | Resistor value spec. for each AC motor Drive | Total Braking Current [A] | Min. Resistor Value [Ω] | Max. Total Braking Current [A] | Peak Power [kW] |
| 160 | 132 | 89.4 | 6160*1 | BR1K5W027*10 | 5 parallel, 2 series | 15000W 10.8Ω | 103.7 | 8.2 | 136 | 152.3 |
| 200 | 160 | 108.3 | 6200*1 | BR1K5W027*12 | 6 parallel, 2 series | 18000W 9.0Ω | 124.4 | 6.9 | 162 | 181.4 |
| 250 | 200 | 135.4 | 6110*2 | BR1K5W027*8 | 4 parallel, 2 series | 24000W 6.8Ω | 165.9 | 6.1 | 184 | 206.1 |
| 315 | 250 | 169.3 | 6160*2 | BR1K5W027*10 | 5 parallel, 2 series | 30000W 5.4Ω | 207.4 | 4.1 | 272 | 304.6 |
| 400 | 315 | 213.3 | 6200*2 | BR1K5W027*12 | 6 parallel, 2 series | 36000W 4.5Ω | 248.9 | 3.5 | 324 | 362.9 |
| 450 | 355 | 240.3 | 6200*2 | BR1K5W027*14 | 7 parallel, 2 series | 42000W 3.9Ω | 290.4 | 3.5 | 324 | 362.9 |
| 560 | 450 | 304.7 | 6200*3 | BR1K5W027*12 | 6 parallel, 2 series | 54000W 3.0Ω | 373.3 | 2.3 | 486 | 544.3 |
| 630 | 630 | 426.5 | 6200*4 | BR1K5W027*12 | 6 parallel, 2 series | 72000W 2.3Ω | 497.8 | 1.7 | 648 | 725.8 |

*1 Calculation for 125% brake toque: (kW)*125%*0.8; where 0.8 is motor efficiency.
Because there is a resistor limit of power consumption, the longest operation time for 10%ED is 10sec (on: 10sec/ off: 90sec).

*2 Please refer to the Brake Performance Curve for “Operation Duration & ED” vs. “Braking Current”.

*3 For heat dissipation, a resistor of 400W or lower should be fixed to the frame and maintain the surface temperature below 50℃; a resistor of 1000W and above should maintain the surface temperature below 350℃.

*4 Please refer to VFDB series Braking Module Instruction for more detail on braking resistor.

**NOTE**

1. Specifications and Appearances of Brake Resistors

1-1 Wire Wound Resistors: For 1000W(included) and above, see Figure 7-1 for product appearances and Table 7-1 for model and specification comparison.

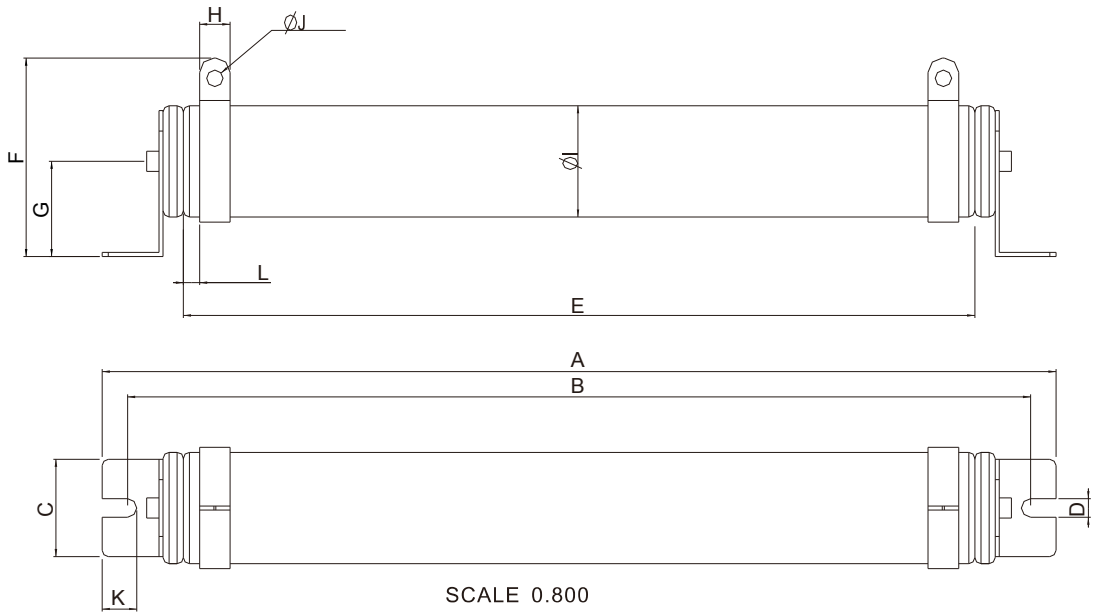


Figure 7-1

Models and Specifications Comparison Table of Wire Wound Resistors:

Unit: mm

| MODEL | A | B | C | D | E | F | G | H | ØI | ØJ | K | L |
|---|---|---|---|---|---|---|---|---|---|---|---|---|
| BR1K0W4P3 | 470±10 | 445±5 | 48±0.2 | 9.1±0.1 | 390±3 | 98±5 | 47±5 | 15±1 | 55±5 | 8.1±0.1 | 21±0.2 | 8±1 |
| BR1K0W5P1 | | | | | | | | | | | | |
| BR1K0W016 | | | | | | | | | | | | |
| BR1K0W020 | | | | | | | | | | | | |
| BR1K0W075 | | | | | | | | | | | | |
| BR1K2W3P9 | | | | | | | | | | | | |
| BR1K2W015 | | | | | | | | | | | | |
| BR1K5W3P3 | | | | | | | | | | | | |
| BR1K5W012 | | | | | | | | | | | | |
| BR1K5W013 | | | | | | | | | | | | |
| BR1K5W043 | | | | | | | | | | | | |

Table 7-1

1-2 Aluminum Housed Resistors: For less than 1000W.

For more information, see Figure 7- 2 for product appearances and Table 7-2 for model and specification comparison.

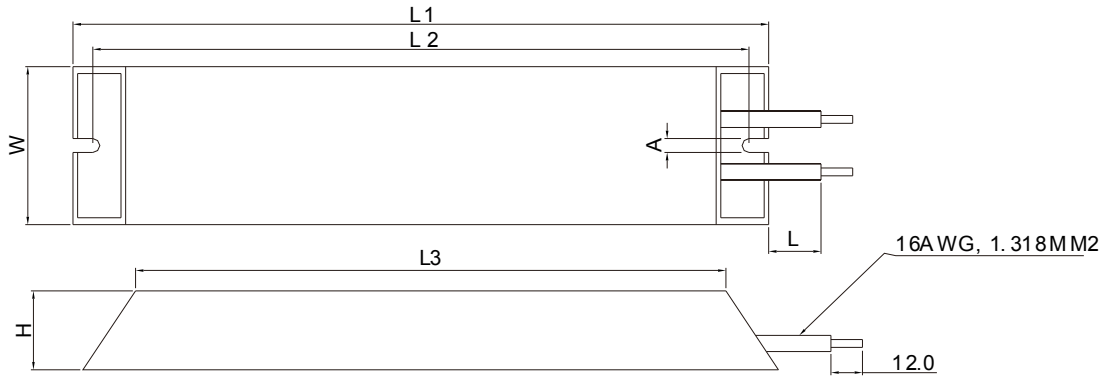


Figure 7-2

| MODEL | L1 | L2 | L3 | W | H | A | L |
|---|---|---|---|---|---|---|---|
| BR080W200 | 140±2 | 125±2 | 100±1 | 40±0.5 | 20±0.5 | 5.3±0.5 | 200±20 |
| BR080W750 | | | | | | | |
| BR200W091 | 165±2 | 150±2 | 125±1 | 60±0.5 | 30±0.5 | | |
| BR200W360 | | | | | | | |
| BR300W070 | 215±2 | 200±2 | 175±1 | | | | |
| BR300W250 | | | | | | | |
| BR400W040 | 265±2 | 250±2 | 225±1 | | | | |
| BR400W150 | | | | | | | |

Table 7-2

Unit: mm

2. Definition for Brake Usage ED%

Explanation: The definition of the brake usage ED (%) is for assurance of enough time for the brake unit and brake resistor to dissipate away heat generated by braking. When the brake resistor heats up, the resistance would increase with temperature, and brake torque would decrease accordingly. Recommended cycle time is one minute.

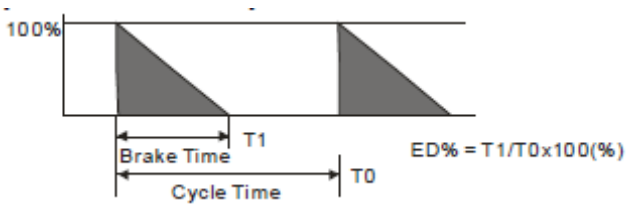


For safety concern, install an overload relay (O.L) between the brake unit and the brake resistor in conjunction with the magnetic contactor (MC) prior to the drive for abnormal protection. The purpose of installing the

thermal overload relay is to protect the brake resistor from damage due to frequent brake, or due to brake unit keeping operating resulted from unusual high input voltage. Under such circumstance, just turn off the power to prevent damaging the brake resistor.

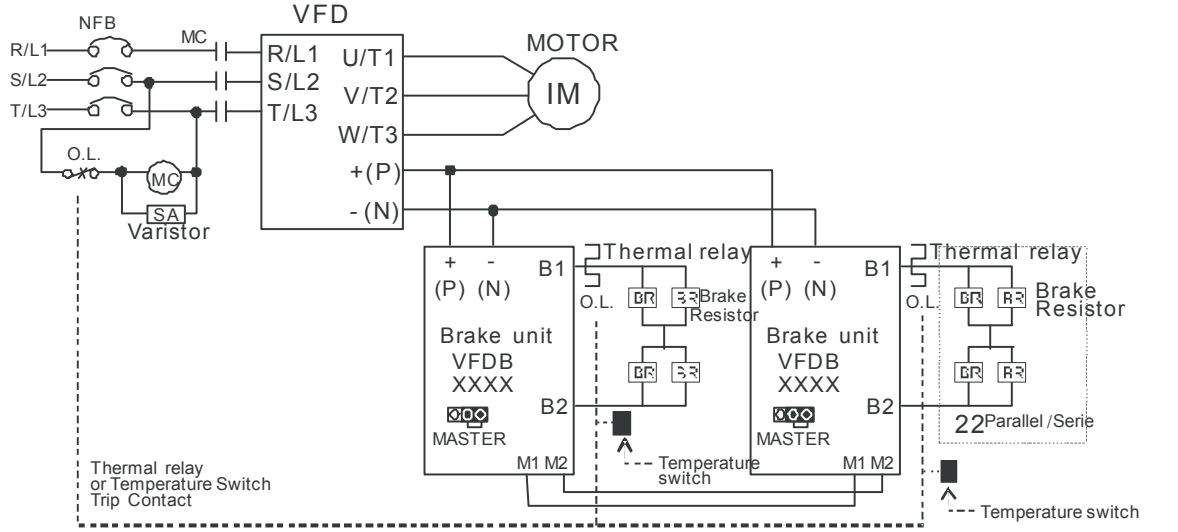


- When AC Drive is equipped with a DC reactor, please read user manual to know th wiring method of input circuit of brake unit +(P).
- Do Not connect input circuit -(N) to the neutral point of the power system.

1. If damage to the drive or other equipment is due to the fact that the brake resistors and brake modules in use are not provided by Delta, the warranty will be void.
2. Take into consideration the safety of the environment when installing the brake resistors. If the minimum resistance value is to be utilized, consult local dealers for the calculation of Watt figures.
3. When using more than 2 brake units, equivalent resistor value of parallel brake unit can't be less than the value in the column "Minimum Equivalent Resistor Value for Each AC Drive" (the right-most column in the table). Please read the wiring information in the user manual of brake unit thoroughly prior to operation
4. This chart is for normal usage; if the AC motor drive is applied for frequent braking, it is suggested to enlarge 2~3 times of the Watts.
5. Thermal Relay:

   Thermal relay selection is basing on its overload capability. A standard braking capacity for CP2000 is 10%ED (Tripping time=10s). The figure below is an example of 406V, 110kw AC motor drive. It requires the thermal relay to take 260% overload capacity in 10s (Host starting) and the braking current is 126A. In this case, user should select a rated 50A thermal relay. The property of each thermal relay may vary among different manufacturer, please carefully read specification.

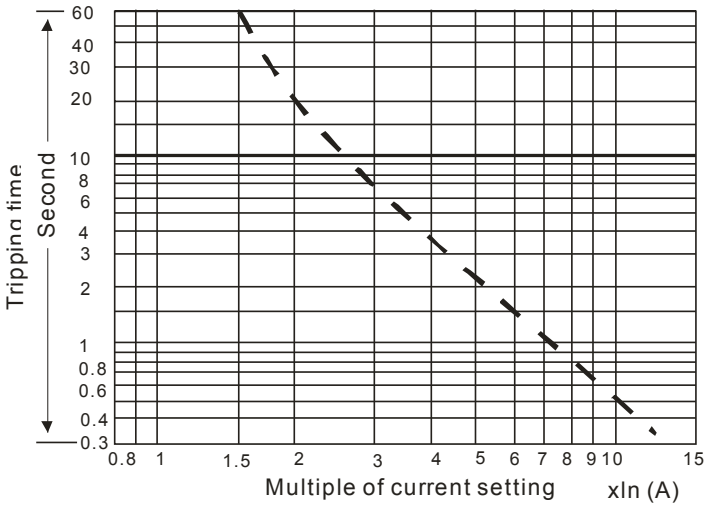

## 7-2 Non-fuse Circuit Breaker

Comply with UL standard: Per UL 508, paragraph 45.8.4, part a,

The rated current of the breaker shall be 1.6~2.6 times of the maximum rated input current of AC motor drive.

| 3-phase 230V | |
|---|---|
| Model | Recommended non-fuse breaker [A] |
| VFD007CP23A-21 | 15 |
| VFD015CP23A-21 | 20 |
| VFD022CP23A-21 | 30 |
| VFD037CP23A-21 | 40 |
| VFD055CP23A-21 | 50 |
| VFD075CP23A-21 | 60 |
| VFD110CP23A-21 | 100 |
| VFD150CP23A-21 | 125 |
| VFD185CP23A-21 | 150 |
| VFD220CP23A-21 | 200 |
| VFD300CP23A-21 | 225 |
| VFD370CP23A-00/23A-21 | 250 |
| VFD450CP23A-00/23A-21 | 300 |
| VFD550CP23A-00/23A-21 | 400 |
| VFD750CP23A-00/23A-21 | 450 |
| VFD900CP23A-00/23A-21 | 600 |

| 3-phase 460V | |
|---|---|
| Model | Recommended non-fuse breaker [A] |
| VFD007CP43A-21/4EA-21 | 10 |
| VFD015CP43B-21/4EB-21 | 10 |
| VFD022CP43B-21/4EB-21 | 15 |
| VFD040CP43A-21/4EA-21 | 25 |
| VFD037CP43B-21/4EB-21 | 30 |
| VFD055CP43B-21/4EB-21 | 40 |
| VFD075CP43B-21/4EB-21 | 40 |
| VFD110CP43B-21/4EB-21 | 50 |
| VFD150CP43B-21/4EB-21 | 60 |
| VFD185CP43B-21/4EB-21 | 75 |
| VFD220CP43A-21/4EA-21 | 100 |
| VFD300CP43B-21/4EB-21 | 125 |
| VFD370CP43B-21/4EB-21 | 150 |
| VFD450CP43S-00/43S-21 | 175 |
| VFD550CP43S-00/43S-21 | 250 |
| VFD750CP43B-00/43B-21 | 300 |
| VFD900CP43A-00/43A-21 | 300 |
| VFD1100CP43A-00/43A-21 | 400 |
| VFD1320CP43B-00/43B-21 | 500 |
| VFD1600CP43A-00/43A-21 | 600 |
| VFD1850CP43B-00/43B-21 | 600 |
| VFD2200CP43A-00/43A-21 | 800 |
| VFD2800CP43A-00/43A-21 | 1000 |
| VFD3150CP43A-00/43C-00/ VFD3150CP43C-21 | 1200 |
| VFD3550CP43A-00/43C-00/ VFD3550CP43C-21 | 1350 |
| VFD4000CP43A-00/43C-00/ VFD4000CP43C-21 | 1500 |
| VFD5000CP43A-00/43C-00/ VFD5000CP43C-21 | 2000 |

| 3-phase 575V | |
|---|---|
| Model | Recommended non-fuse breaker [A] |
| VFD015CP53A-21 | 7 |
| VFD022CP53A-21 | 10 |
| VFD037CP53A-21 | 15 |
| VFD055CP53A-21 | 25 |
| VFD075CP53A-21 | 32 |
| VFD110CP53A-21 | 50 |
| VFD150CP53A-21 | 63 |

| 3-phase 690V | |
|---|---|
| Model | Recommended non-fuse breaker [A] |
| VFD185CP63A-21 | 60 |
| VFD220CP63A-21 | 70 |
| VFD300CP 3A-21 | 80 |
| VFD370CP63A-21 | 100 |
| VFD450CP63A-00/-21 | 100 |
| VFD550CP63A-00/-21 | 125 |
| VFD750CP63A-00/-21 | 175 |
| VFD900CP63A-00/-21 | 200 |
| VFD1100CP63A-00/-21 | 250 |
| VFD1320CP63A-00/-21 | 300 |
| VFD1600CP63A-00/-21 | 350 |
| VFD2000CP63A-00/-21 | 400 |
| VFD2500CP63A-00/-21 | 450 |
| VFD3150CP63A-00/-21 | 500 |
| VFD4000CP63A-00/-21 | 700 |
| VFD4500CP63A-00/-21 | 800 |
| VFD5600CP63A-00/-21 | 1250 |
| VFD6300CP63A-00/-21 | 1400 |

## 7-3 Fuse Specification Chart (Fuse specifications less than the following table are allowed)

☑ "For installation in the United States, branch circuit protection must be provided in accordance with the National Electrical Code (NEC) and any applicable local codes. To fulfill this requirement, use the UL classified fuses"

☑ For installation in Canada, branch circuit protection must be provided in accordance with Canadian Electrical Code and any applicable provincial codes. To fulfill this requirement, use the UL classified fuses"

| 230V Model | Input Current I [A] | | Line Fuse | |
|---|---|---|---|---|
| | Light Duty | Normal Duty | I [A] | Bussmann P/N |
| VFD007CP23A-21 | 6.4 | 3.9 | 15 | JJN-15 |
| VFD015CP23A-21 | 9.6 | 6.4 | 20 | JJN-20 |
| VFD022CP23A-21 | 15 | 12 | 30 | JJN-30 |
| VFD037CP23A-21 | 22 | 16 | 40 | JJN-40 |
| VFD055CP23A-21 | 25 | 20 | 50 | JJN-50 |
| VFD075CP23A-21 | 35 | 28 | 60 | JJN-60 |
| VFD110CP23A-21 | 50 | 36 | 100 | JJN-100 |
| VFD150CP23A-21 | 65 | 52 | 125 | JJN-125 |
| VFD185CP23A-21 | 83 | 72 | 150 | JJN-150 |
| VFD220CP23A-21 | 100 | 83 | 200 | JJN-200 |
| VFD300CP23A-21 | 116 | 99 | 225 | JJN-225 |
| VFD370CP23A-00/23A-21 | 146 | 124 | 250 | JJN-250 |
| VFD450CP23A-00/23A-21 | 180 | 143 | 300 | JJN-300 |
| VFD550CP23A-00/23A-21 | 215 | 171 | 400 | JJN-400 |
| VFD750CP23A-00/23A-21 | 276 | 206 | 450 | JJN-450 |
| VFD900CP23A-00/23A-21 | 322 | 245 | 600 | JJN-600 |

| 460V Model | Input Current I [A] | | Line Fuse | |
|---|---|---|---|---|
| | Light Duty | Normal Duty | I [A] | Bussmann P/N |
| VFD007CP43A-21/4EA-21 | 4.3 | 3.5 | 10 | JJS-10 |
| VFD015CP43B-21/4EB-21 | 6.0 | 4.3 | 10 | JJS-10 |
| VFD022CP43B-21/4EB-21 | 8.1 | 5.9 | 15 | JJS-15 |
| VFD040CP43A-21/4EA-21 | 12.4 | 8.7 | 25 | JJS-20 |
| VFD037CP43B-21/4EB-21 | 16 | 14 | 30 | JJS-20 |
| VFD055CP43B-21/4EB-21 | 20 | 15.5 | 40 | JJS-30 |
| VFD075CP43B-21/4EB-21 | 22 | 17 | 40 | JJS-40 |
| VFD110CP43B-21/4EB-21 | 26 | 20 | 50 | JJS-50 |
| VFD150CP43B-21/4EB-21 | 35 | 26 | 60 | JJS-60 |
| VFD185CP43B-21/4EB-21 | 42 | 35 | 75 | JJS-75 |
| VFD220CP43A-21/4EA-21 | 50 | 40 | 100 | JJS-100 |
| VFD300CP43B-21/4EB-21 | 66 | 47 | 125 | JJS-125 |
| VFD370CP43B-21/4EB-21 | 80 | 63 | 150 | JJS-150 |
| VFD450CP43S-00/S-21 | 91 | 74 | 175 | JJS-175 |
| VFD550CP43S-00/43S-21 | 110 | 101 | 250 | JJS-225 |
| VFD750CP43B-00/43B-21 | 150 | 114 | 300 | JJS-300 |
| VFD900CP43A-00/43-21 | 180 | 157 | 300 | JJS-300 |
| VFD1100CP43A-00/43A-21 | 220 | 167 | 400 | JJS-400 |
| VFD1320CP43B-00/43B-21 | 260 | 207 | 500 | JJS-500 |
| VFD1600CP43A-00/43A-21 | 310 | 240 | 600 | JJS-600 |
| VFD1850CP43B-00/43B-21 | 370 | 300 | 600 | JJS-600 |
| VFD2200CP43A-00/43A-21 | 460 | 380 | 800 | JJS-800 |
| VFD2800CP43A-00/43A-21 | 530 | 400 | 1000 | KTU-1000 |
| VFD3150CP43A-00/43C-00/43C-21 | 616 | 494 | 1200 | KTU-1200 |
| VFD3550CP43A-00/43C-00/43C-21 | 683 | 555 | 1350 | KTU-1350 |
| VFD4000CP43A-00/43C-00/43C-21 | 770 | 625 | 1500 | KTU-1500 |
| VFD5000CP43A-00/43C-00/43C-21 * | 930 | 866 | 1600 | 170M6019 |

*VFD5000CP43A-00/43C-00/43C-21 models don't have UL certification.

| 575V Model | Input Current I [A] | | Line Fuse | | |
|---|---|---|---|---|---|
| | Light Duty | Normal Duty | I [A] | Bussmann P/N | Vendor |
| VFD015CP53A-21 | 3.8 | 3.1 | 7 | KLKD007.T | Littelfuse |
| VFD022CP53A-21 | 5.4 | 4.5 | 10 | KLKD010.T | Littelfuse |
| VFD037CP53A-21 | 10.2 | 7.2 | 15 | KLKD015.T | Littelfuse |
| VFD055CP53A-21 | 14.9 | 12.3 | 25 | 25ET | Bussmann |
| VFD075CP53A-21 | 16.9 | 15 | 32 | 32ET | Bussmann |
| VFD110CP53A-21 | 21.3 | 18 | 50 | 50FE | Bussmann |
| VFD150CP53A-21 | 26.3 | 22.8 | 63 | 63FE | Bussmann |

| 690V Model | Input Current I [A] | | Line Fuse | |
|---|---|---|---|---|
| | Light Duty | Normal Duty | I [A] | Bussmann P/N |
| VFD185CP63A-21 | 29 | 24 | 60 | JJS-60 |
| VFD220CP63A-21 | 36 | 29 | 70 | JJS-70 |
| VFD300CP63A-21 | 43 | 36 | 80 | JJS-80 |
| VFD370CP63A-21 | 54 | 43 | 100 | JJS-100 |
| VFD450CP63A-00/-21 | 65 | 54 | 100 | JJS-100 |
| VFD550CP63A-00/-21 | 81 | 65 | 125 | JJS-125 |
| VFD750CP63A-00/-21 | 84 | 66 | 175 | JJS-175 |
| VFD900CP63A-00/-21 | 102 | 84 | 200 | JJS-200 |
| VFD1100CP63A-00/-21 | 122 | 102 | 250 | JJS-250 |
| VFD1320CP63A-00/-21 | 147 | 122 | 300 | JJS-300 |
| VFD1600CP63A-00/-21 | 178 | 148 | 350 | JJS-350 |
| VFD2000CP63A-00/-21 | 217 | 178 | 400 | JJS-400 |
| VFD2500CP63A-00/-21 | 292 | 222 | 450 | 170M4063 |
| VFD3150CP63A-00/-21 | 353 | 292 | 500 | 170M6058 |
| VFD4000CP63A-00/-21 | 454 | 353 | 700 | 170M6061 |
| VFD4500CP63A-00/-21 | 469 | 388 | 800 | 170M6062 |
| VFD5600CP63A-00/-21 | 595 | 504 | 1250 | 170M6066 |
| VFD6300CP63A-00/-21 | 681 | 681 | 1400 | 170M6067 |

# 7-4 AC/DC Reactor

## AC Input Reactor

Installing AC reactor in the input side of AC motor drive can increase line impedance, improve power factor, reduce input current, increase system capacity and reduce interference generated from motor drive. In addition, to suppress the momentary voltage surge or abnormal current spike is also one of its features. For example, when the capacity of main power is higher than 500 kVA, or switching to capacity bank, the momentary voltage and current spike may damage motor drive's internal circuit. Therefore, installing AC reactor in the input side of AC motor drive can suppress the surge to protect the AC motor drive.

### Installation

AC input reactor is installed serially between the mains power and three phases input side of motor drive, which is shown as below:

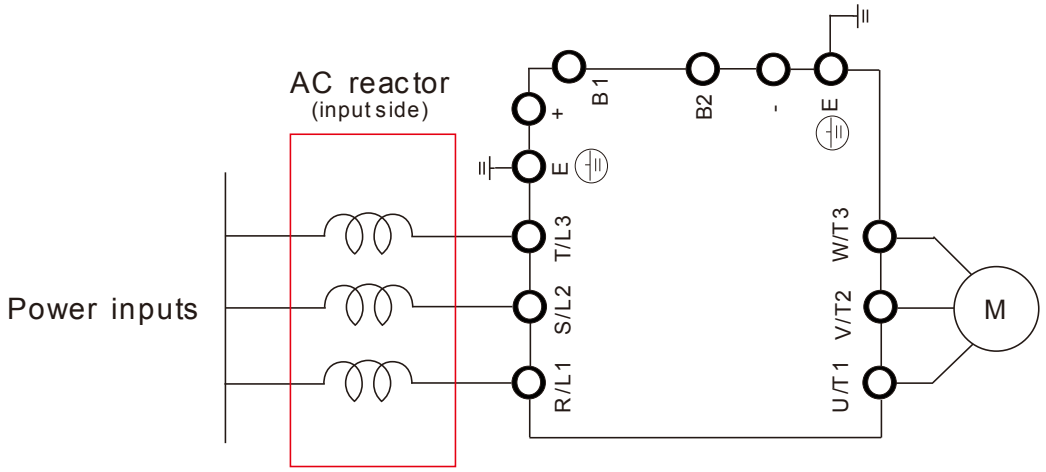


Figure 7-1

Wiring of AC input reactor

Following table shows the standard AC reactors specification of CP2000

200V~230V/ 50~60Hz

| Model | kW | HP | Rated Amps of AC Reactor (Arms) | | Max. continuous Amps (Arms) | | 3% impedance (mH) | | 5% impedance (mH) | | Built-in DC reactor | 3% Input AC reactor Delta part # | |
|---|---|---|---|---|---|---|---|---|---|---|---|---|---|
| | | | Normal Duty | Light Duty | Normal Duty | Light Duty | Normal Duty | Light Duty | Normal Duty | Light Duty | | Normal Duty | Light Duty |
| VFD007CP23A-21 | 0.75 | 1 | 4.6 | 5 | 7.36 | 6 | 2.297 | 2.113 | 3.829 | 3.522 | No | DR005A0254 | DR005A0254 |
| VFD015CP23A-21 | 1.5 | 2 | 5 | 7.5 | 8 | 9 | 2.113 | 1.409 | 3.522 | 2.348 | No | DR005A0254 | DR008A0159 |
| VFD022CP23A-21 | 2.2 | 3 | 8 | 10 | 12.8 | 12 | 1.321 | 1.057 | 2.201 | 1.761 | No | DR008A0159 | DR011A0115 |
| VFD037CP23A-21 | 3.7 | 5 | 11 | 15 | 17.6 | 18 | 0.961 | 0.704 | 1.601 | 1.174 | No | DR011A0115 | DR017AP746 |
| VFD055CP23A-21 | 5.5 | 7.5 | 17 | 21 | 27.2 | 25.2 | 0.622 | 0.503 | 1.036 | 0.839 | No | DR017AP746 | DR025AP507 |
| VFD075CP23A-21 | 7.5 | 10 | 25 | 31 | 40 | 37.2 | 0.423 | 0.341 | 0.704 | 0.568 | No | DR025AP507 | DR033AP320 |
| VFD110CP23A-21 | 11 | 15 | 33 | 46 | 52.8 | 55.2 | 0.320 | 0.230 | 0.534 | 0.383 | No | DR033AP320 | DR049AP215 |
| VFD150CP23A-21 | 15 | 20 | 49 | 61 | 78.4 | 73.2 | 0.216 | 0.173 | 0.359 | 0.289 | No | DR049AP215 | DR065AP162 |
| VFD185CP23A-21 | 18.5 | 25 | 65 | 75 | 104 | 90 | 0.163 | 0.141 | 0.271 | 0.235 | No | DR065AP162 | DR075AP170 |
| VFD220CP23A-21 | 22 | 30 | 75 | 90 | 120 | 108 | 0.141 | 0.117 | 0.235 | 0.196 | No | DR075AP170 | DR090AP141 |
| VFD300CP23A-21 | 30 | 40 | 90 | 105 | 144 | 126 | 0.117 | 0.101 | 0.196 | 0.168 | No | DR090AP141 | DR105AP106 |
| VFD370CP23A-00/-21 | 37 | 50 | 120 | 146 | 192 | 175.2 | 0.088 | 0.072 | 0.147 | 0.121 | Yes | DR146AP087 | DR146AP087 |
| VFD450CP23A-00/-21 | 45 | 60 | 146 | 180 | 233.6 | 216 | 0.072 | 0.059 | 0.121 | 0.098 | Yes | DR146AP087 | DR180AP070 |

| Model | kW | HP | Rated Amps of AC Reactor (Arms) | | Max. continuous Amps (Arms) | | 3% impedance (mH) | | 5% impedance (mH) | | Built-in DC reactor | 3% Input AC reactor Delta part # | |
|---|---|---|---|---|---|---|---|---|---|---|---|---|---|
| | | | Normal Duty | Light Duty | Normal Duty | Light Duty | Normal Duty | Light Duty | Normal Duty | Light Duty | | Normal Duty | Light Duty |
| VFD550CP23A-00/-21 | 55 | 75 | 180 | 215 | 288 | 258 | 0.059 | 0.049 | 0.098 | 0.082 | Yes | DR180AP070 | DR215AP059 |
| VFD750CP23A-00/-21 | 75 | 100 | 215 | 276 | 344 | 331.2 | 0.049 | 0.038 | 0.082 | 0.064 | Yes | DR215AP059 | DR276AP049 |
| VFD900CP23A-00/-21 | 90 | 125 | 255 | 322 | 408 | 386.4 | 0.041 | 0.033 | 0.069 | 0.055 | Yes | DR276AP049 | DR346AP037 |

380V~460V/ 50~60Hz

| Model | kW | HP | Rated Amps of AC Reactor (Arms) | | Max. continuous Amps (Arms) | | 3% impedance (mH) | | 5% impedance (mH) | | Built-in DC reactor | 3% Input AC reactor Delta part # | |
|---|---|---|---|---|---|---|---|---|---|---|---|---|---|
| | | | Normal Duty | Light Duty | Normal Duty | Light Duty | Normal Duty | Light Duty | Normal Duty | Light Duty | | Normal Duty | Light Duty |
| VFD007CP43A-21/4EA-21 | 0.75 | 1 | 2.8 | 3 | 4.48 | 3.6 | 7.548 | 7.045 | 12.580 | 11.741 | No | DR003A0810 | DR003A0810 |
| VFD015CP43B-21/4EB-21 | 1.5 | 2 | 3 | 4.2 | 4.8 | 5.04 | 7.045 | 5.032 | 11.741 | 8.387 | No | DR003A0810 | DR004A0607 |
| VFD022CP43B-21/4EB-21 | 2.2 | 3 | 4 | 5.5 | 6.4 | 6.6 | 5.284 | 3.843 | 8.806 | 6.404 | No | DR004A0607 | DR006A0405 |
| VFD040CP43A-21/4EA-21 | 3.7 | 5 | 6 | 8.5 | 9.6 | 10.2 | 3.522 | 2.486 | 5.871 | 4.144 | No | DR006A0405 | DR009A0270 |
| VFD037CP43B-21/4EB-21 | 4 | 5 | 9 | 10.5 | 14.4 | 12.6 | 2.348 | 2.013 | 3.914 | 3.355 | No | DR009A0270 | DR010A0231 |
| VFD055CP43B-21/4EB-21 | 5.5 | 7.5 | 10.5 | 13 | 16.8 | 15.6 | 2.013 | 1.626 | 3.355 | 2.710 | No | DR010A0231 | DR012A0202 |
| VFD075CP43B-21/4EB-21 | 7.5 | 10 | 12 | 18 | 19.2 | 21.6 | 1.761 | 1.174 | 2.935 | 1.957 | No | DR012A0202 | DR018A0117 |
| VFD110CP43B-21/4EB-21 | 11 | 15 | 18 | 24 | 28.8 | 28.8 | 1.174 | 0.881 | 1.957 | 1.468 | No | DR018A0117 | DR024AP881 |
| VFD150CP43B-21/4EB-21 | 15 | 20 | 24 | 32 | 38.4 | 38.4 | 0.881 | 0.660 | 1.468 | 1.101 | No | DR024AP881 | DR032AP660 |
| VFD185CP43B-21/4EB-21 | 18.5 | 25 | 32 | 38 | 51.2 | 45.6 | 0.660 | 0.556 | 1.101 | 0.927 | No | DR032AP660 | DR038AP639 |
| VFD220CP43A-21/4EA-21 | 22 | 30 | 38 | 45 | 60.8 | 54 | 0.556 | 0.470 | 0.927 | 0.783 | No | DR038AP639 | DR045AP541 |
| VFD300CP43B-21/4EB-21 | 30 | 40 | 45 | 60 | 72 | 72 | 0.470 | 0.352 | 0.783 | 0.587 | No | DR045AP541 | DR060AP405 |
| VFD370CP43B-21/4EB-21 | 37 | 50 | 60 | 73 | 96 | 87.6 | 0.352 | 0.290 | 0.587 | 0.483 | No | DR060AP405 | DR073AP334 |
| VFD450CP43S-00/43S-21 | 45 | 60 | 73 | 91 | 116.8 | 109.2 | 0.290 | 0.232 | 0.483 | 0.387 | Yes | DR073AP334 | DR091AP267 |
| VFD550CP43S-00/43S-21 | 55 | 75 | 91 | 110 | 145.6 | 132 | 0.232 | 0.192 | 0.387 | 0.320 | Yes | DR091AP267 | DR110AP221 |
| VFD750CP43B-00/43B-21 | 75 | 100 | 110 | 150 | 176 | 180 | 0.192 | 0.141 | 0.320 | 0.235 | Yes | DR110AP221 | DR150AP162 |
| VFD900CP43A-00/43A-21 | 90 | 125 | 150 | 180 | 240 | 216 | 0.141 | 0.117 | 0.235 | 0.196 | Yes | DR150AP162 | DR180AP135 |
| VFD1100CP43A-00/43A-21 | 110 | 150 | 180 | 220 | 288 | 264 | 0.117 | 0.096 | 0.196 | 0.160 | Yes | DR180AP135 | DR220AP110 |
| VFD1320CP43B-00/43B-21 | 132 | 175 | 220 | 260 | 352 | 312 | 0.096 | 0.081 | 0.160 | 0.135 | Yes | DR220AP110 | DR260AP098 |
| VFD1600CP43A-00/43A-21 | 160 | 215 | 260 | 310 | 416 | 372 | 0.081 | 0.068 | 0.135 | 0.114 | Yes | DR260AP098 | DR310AP078 |
| VFD1850CP43B-00/43B-21 | 185 | 250 | 310 | 370 | 496 | 444 | 0.068 | 0.057 | 0.114 | 0.095 | Yes | DR310AP078 | DR370AP066 |
| VFD2200CP43A-00/43A-21 | 220 | 300 | 370 | 460 | 592 | 552 | 0.057 | 0.046 | 0.095 | 0.077 | Yes | DR370AP066 | DR460AP054 |
| VFD2800CP43A-00/43A-21 | 280 | 375 | 460 | 530 | 736 | 636 | 0.046 | 0.040 | 0.077 | 0.066 | Yes | DR460AP054 | DR550AP044 |
| VFD3150CP43A-00/43C-00/ VFD3150CP43A-21 | 315 | 420 | 550 | 616 | 880 | 739.2 | 0.038 | 0.034 | 0.064 | 0.057 | Yes | DR550AP044 | DR616AP039 |
| VFD3550CP43A-00/43C-00/ VFD3550CP43A-21 | 355 | 475 | 616 | 683 | 985.6 | 819.6 | 0.034 | 0.031 | 0.057 | 0.052 | Yes | DR616AP039 | DR683AP036 |
| VFD4000CP43A-00/43C-00/ VFD4000CP43A-21 | 400 | 536 | 683 | 770 | 1092.8 | 924 | 0.031 | 0.027 | 0.052 | 0.046 | Yes | DR683AP036 | DR866AP028 |
| VFD5000CP43A-00/43C-00/ VFD5000CP43A-21 | 500 | 675 | 866 | 912 | 1385.6 | 1094.4 | 0.024 | 0.023 | 0.041 | 0.039 | Yes | DR866AP028 | DR866AP028 |

575 V, 50/60 Hz, 3-phase

| Model | kW | HP | Rated Amps of AC Reactor (Arms) | | Max. continuous Amps (Arms) | 3% Impedance (mH) | | 5% impedance (mH) | |
|---|---|---|---|---|---|---|---|---|---|
| | | | Normal Duty | Normal Duty | | Light Duty | Normal Duty | Light Duty | Normal Duty |
| 015 | 1.5 | 2 | 3 | 2.5 | 4.2 | 8.806 | 10.567 | 14.677 | 17.612 |
| 022 | 2.2 | 3 | 4.3 | 3.6 | 5.9 | 6.144 | 7.338 | 10.239 | 12.230 |
| 037 | 3.7 | 5 | 6.7 | 5.5 | 9.1 | 3.943 | 4.803 | 6.572 | 8.005 |
| 055 | 5.5 | 7.5 | 9.9 | 8.2 | 13.7 | 2.668 | 3.222 | 4.447 | 5.369 |
| 075 | 7.5 | 10 | 12.1 | 10 | 16.5 | 2.183 | 2.642 | 3.639 | 4.403 |
| 110 | 11 | 15 | 18.7 | 15.5 | 25.7 | 1.413 | 1.704 | 2.355 | 2.841 |
| 150 | 15 | 20 | 24.2 | 20 | 33.3 | 1.092 | 1.321 | 1.819 | 2.201 |

690V, 50/60 Hz, 3-phase

| Model | kW | HP | Rated Amps of AC Reactor (Arms) | | Max. continuous Amps (Arms) | | 3% Impedance (mH) | | 5% impedance (mH) | |
|---|---|---|---|---|---|---|---|---|---|---|
| | | | Normal Duty | Normal Duty | Normal Duty | Normal Duty | Light Duty | Normal Duty | Light Duty | Normal Duty |
| 185 | 18.5 | 25 | 24 | 20 | 28.8 | 30.0 | 1.585 | 1.902 | 2.642 | 3.170 |
| 220 | 22 | 30 | 30 | 24 | 36.0 | 36.0 | 1.268 | 1.585 | 2.113 | 2.642 |
| 300 | 30 | 40 | 36 | 30 | 43.2 | 45.0 | 1.057 | 1.268 | 1.761 | 2.113 |
| 370 | 37 | 50 | 45 | 36 | 54.0 | 54.0 | 0.845 | 1.057 | 1.409 | 1.761 |
| 450 | 45 | 60 | 54 | 45 | 64.8 | 67.5 | 0.704 | 0.845 | 1.174 | 1.409 |
| 550 | 55 | 75 | 67 | 54 | 80.4 | 81.0 | 0.568 | 0.704 | 0.946 | 1.174 |
| 750 | 75 | 100 | 86 | 67 | 103.2 | 100.5 | 0.442 | 0.568 | 0.737 | 0.946 |
| 900 | 90 | 125 | 104 | 86 | 124.8 | 129.0 | 0.366 | 0.442 | 0.610 | 0.737 |
| 1100 | 110 | 150 | 125 | 104 | 150.0 | 156.0 | 0.304 | 0.366 | 0.507 | 0.610 |
| 1320 | 132 | 175 | 150 | 125 | 180.0 | 187.5 | 0.254 | 0.304 | 0.423 | 0.507 |
| 1600 | 160 | 215 | 180 | 150 | 216.0 | 225.0 | 0.211 | 0.254 | 0.352 | 0.423 |
| 2000 | 200 | 270 | 220 | 180 | 264.0 | 270.0 | 0.173 | 0.211 | 0.288 | 0.352 |
| 2500 | 250 | 335 | 290 | 220 | 348.0 | 330.0 | 0.131 | 0.173 | 0.219 | 0.288 |
| 3150 | 315 | 425 | 350 | 290 | 420.0 | 435.0 | 0.109 | 0.131 | 0.181 | 0.219 |
| 4000 | 400 | 530 | 430 | 350 | 516.0 | 525.0 | 0.088 | 0.109 | 0.147 | 0.181 |
| 4500 | 450 | 600 | 465 | 385 | 558.0 | 577.5 | 0.082 | 0.099 | 0.136 | 0.165 |
| 5600 | 560 | 745 | 590 | 465 | 708.0 | 697.5 | 0.064 | 0.082 | 0.107 | 0.136 |
| 6300 | 630 | 850 | 675 | 675 | 810.0 | 1012.5 | 0.056 | 0.056 | 0.094 | 0.094 |

AC input reactor dimension and specification:

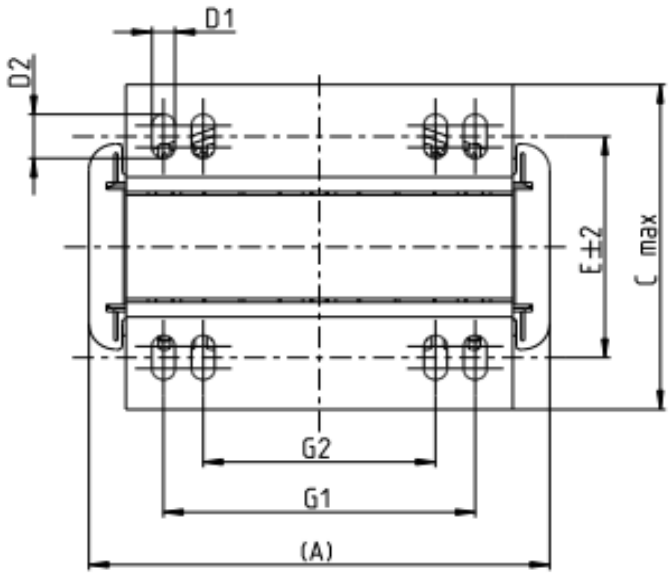


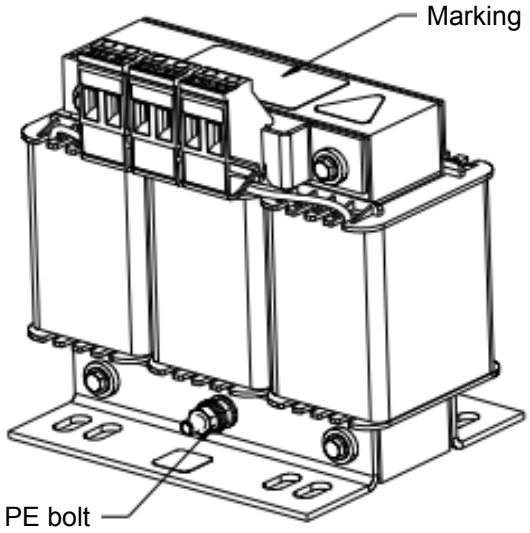


Tightening torque: 10.2~12.3 kg-cm / [8.9~10.6 lb-in.] / [1.0~1.2 Nm]

Tightening torque: 6.1~8.2 kg-cm / [5.3~7.1 lb-in.] / [0.6~0.8 Nm]

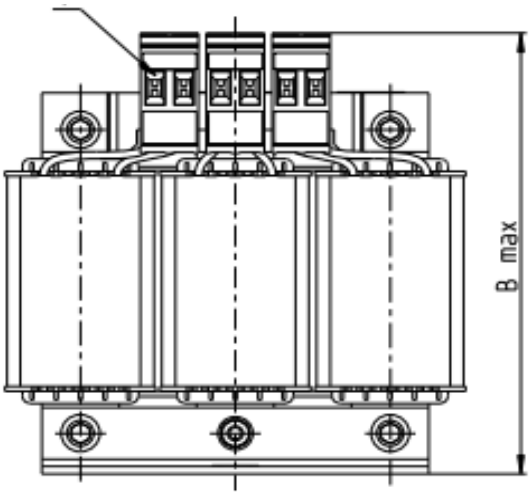


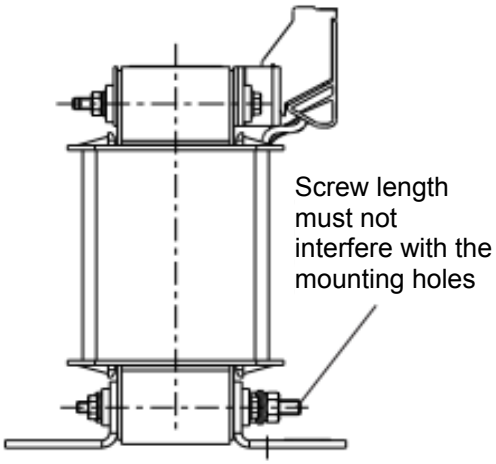


Unit: mm

| Input AC reactor Delta part # | A | B | C | D1*D2 | E | G1 | G2 | PE D |
|---|---|---|---|---|---|---|---|---|
| DR005A0254 | 96 | 100 | 60 | 6*9 | 42 | 60 | 40 | M4 |
| DR008A0159 | 120 | 120 | 88 | 6*12 | 60 | 80.5 | 60 | M4 |
| DR011A0115 | 120 | 120 | 88 | 6*12 | 60 | 80.5 | 60 | M4 |
| DR017AP746 | 120 | 120 | 93 | 6*12 | 65 | 80.5 | 60 | M4 |
| DR025AP507 | 150 | 150 | 112 | 6*12 | 88 | 107 | 75 | M4 |
| DR033AP320 | 150 | 150 | 112 | 6*12 | 88 | 107 | 75 | M4 |

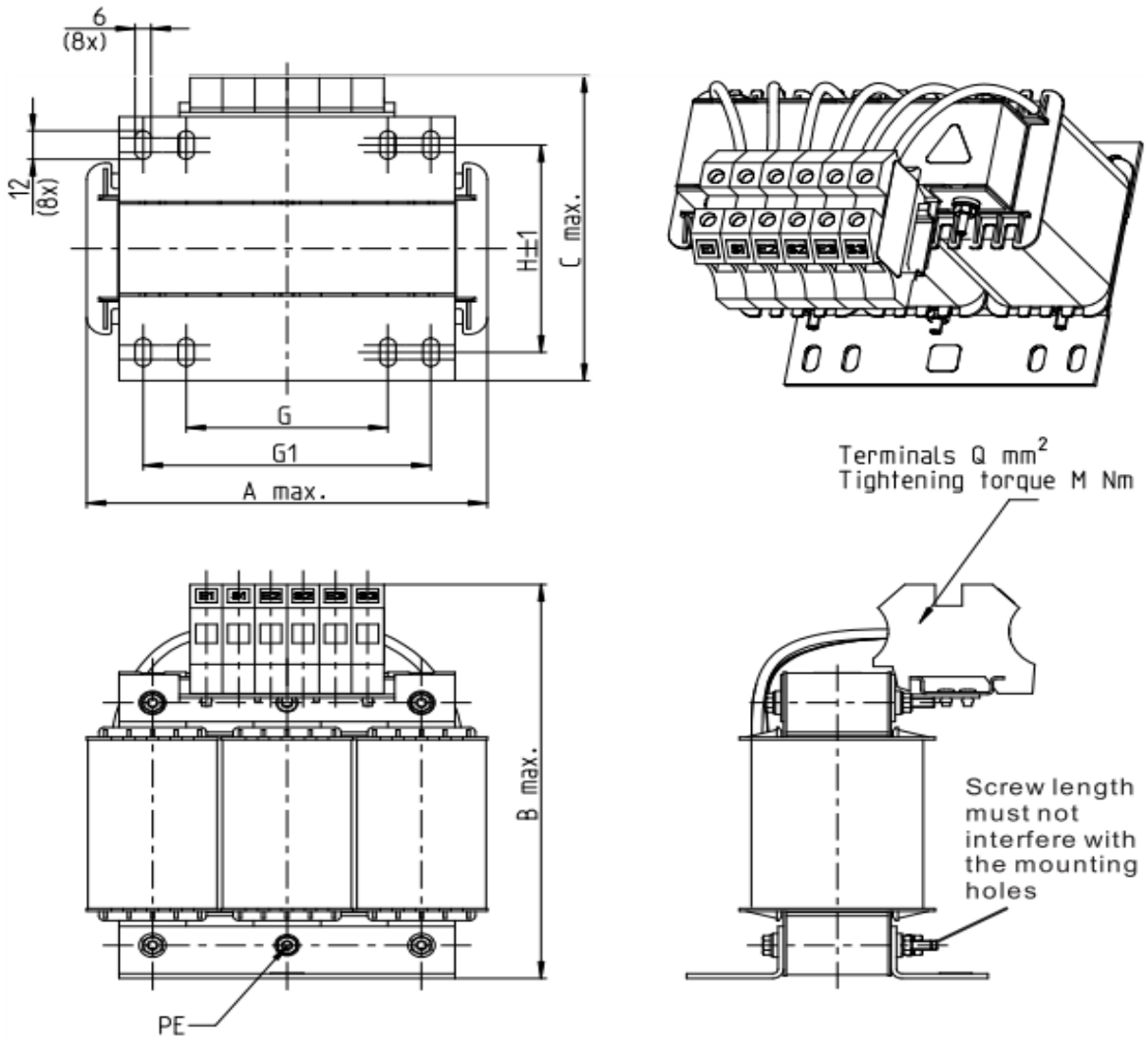


Unit: mm

| Input AC reactor Delta part # | A | B | C | D1*D2 | H | G | G1 | Q | M | PE D |
|---|---|---|---|---|---|---|---|---|---|---|
| DR049AP215 | 180 | 195 | 160 | 6*12 | 115 | 85 | 122 | 16 | 1.2~1.4 | M4 |
| DR065AP163 | 180 | 205 | 160 | 6*12 | 115 | 85 | 122 | 35 | 2.5~3.0 | M4 |

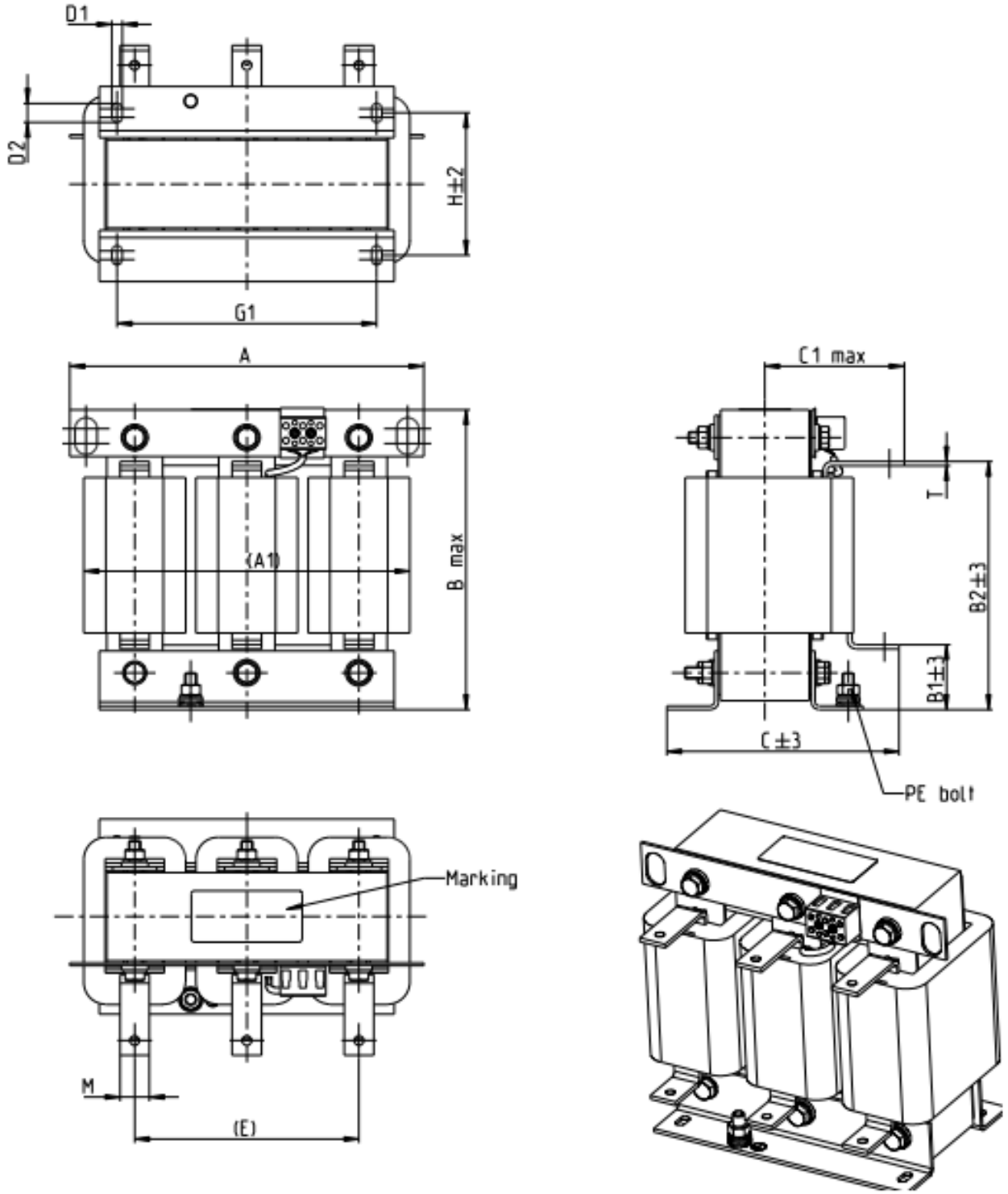


Unit: mm

| Input AC reactor Delta part # | A | A1 | B | B1 | B2 | C | C1 | D1*D2 | E | G1 | H | M*T | PE |
|---|---|---|---|---|---|---|---|---|---|---|---|---|---|
| DR075AP170 | 240 | 220 | 205 | 42 | 165 | 151 | 95 | 7*13 | 152 | 176 | 85 | 20*3 | M8 |
| DR090AP141 | 240 | 225 | 210 | 44 | 170 | 151 | 95 | 7*13 | 152 | 176 | 85 | 20*3 | M8 |
| DR146AP087 | 240 | 225 | 240 | 44 | 200 | 163 | 100 | 7*13 | 152 | 176 | 97 | 20*3 | M8 |
| DR180AP070 | 250 | 235 | 250 | 49 | 206 | 175 | 105 | 11*18 | 160 | 190 | 124 | 30*3 | M8 |
| DR215AP059 | 250 | 235 | 275 | 51 | 226 | 180 | 110 | 11*18 | 160 | 190 | 124 | 30*5 | M8 |

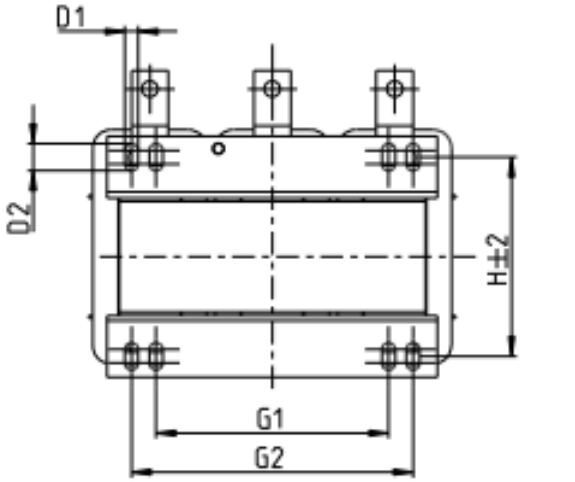


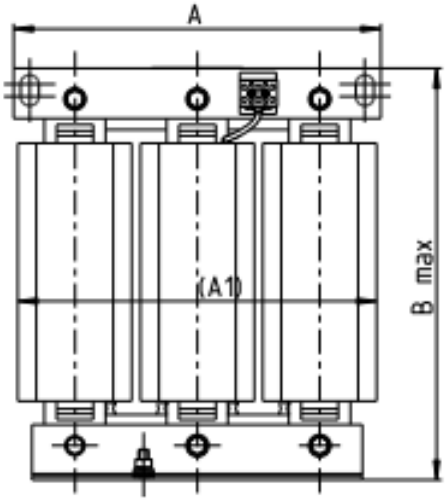


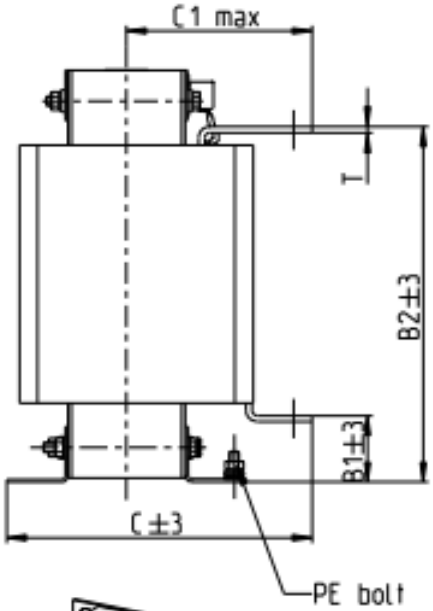


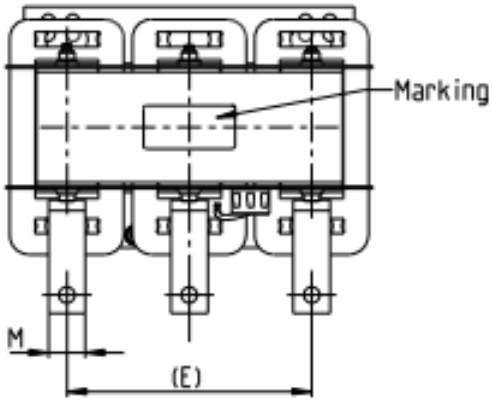


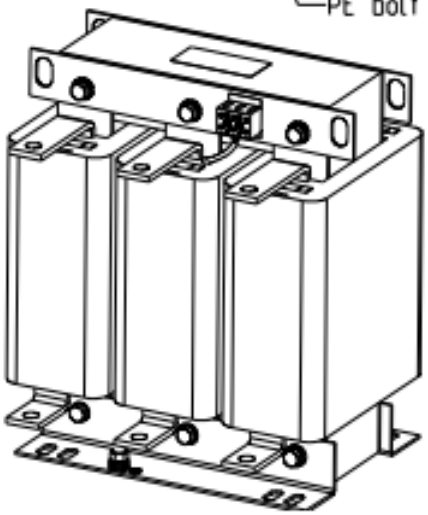

Unit: mm

| Input AC reactor Delta part # | A | A1 | B | B1 | B2 | C | C1 | D1*D2 | E | G1 | H | M*T | PE |
|---|---|---|---|---|---|---|---|---|---|---|---|---|---|
| DR276AP049 | 270 | 255 | 310 | 50 | 265 | 200 | 130 | 10*18 | 176 | 200 | 106 | 30*5 | M8 |
| DR349AP037 | 270 | 260 | 333 | 50 | 285 | 200 | 130 | 10*18 | 176 | 200 | 106 | 30*5 | M8 |

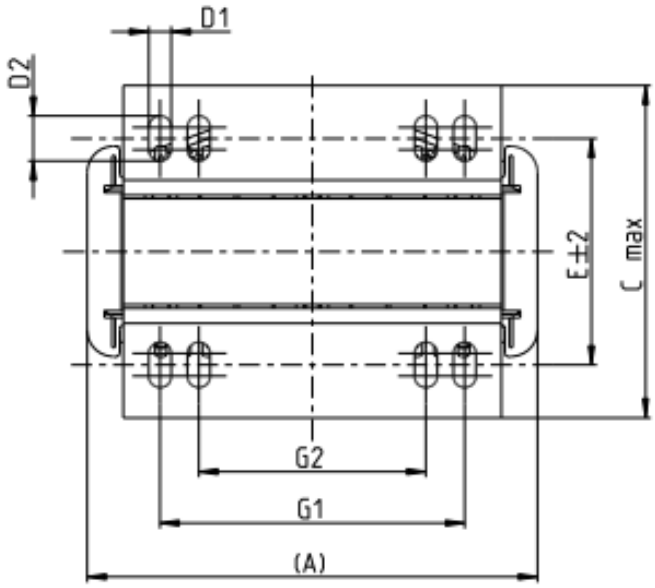


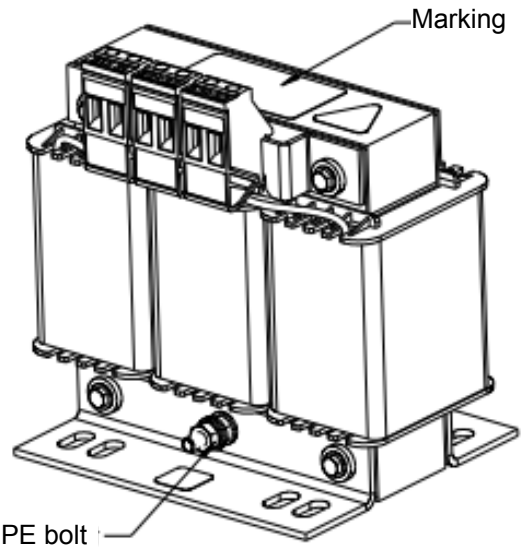


Tightening torque: 10.2~12.3 kg-cm / [8.9~10.6 lb-in.] / [1.0~1.2 Nm]

Tightening torque: 6.1~8.2 kg-cm / [5.3~7.1 lb-in.] / [0.6~0.8 Nm]

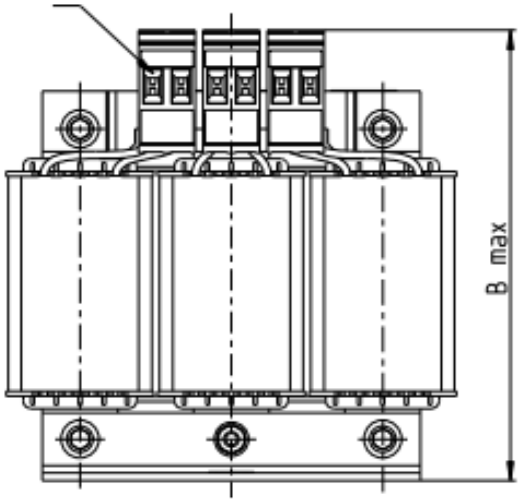


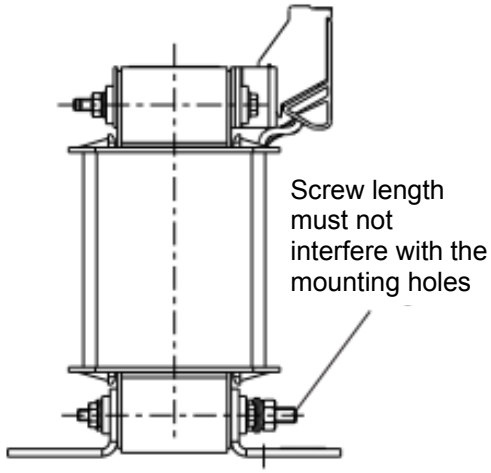


Unit: mm

| Input AC reactor Delta part # | A | B | C | D1*D2 | E | G1 | G2 | PE D |
|---|---|---|---|---|---|---|---|---|
| DR003A0810 | 96 | 100 | 60 | 6*9 | 42 | 60 | 40 | M4 |
| DR004A0607 | 120 | 120 | 88 | 6*12 | 60 | 80.5 | 60 | M4 |
| DR006A0405 | 120 | 120 | 88 | 6*12 | 60 | 805 | 60 | M4 |
| DR009A0270 | 150 | 150 | 88 | 6*12 | 74 | 107 | 75 | M4 |
| DR010A0231 | 150 | 150 | 112 | 6*12 | 88 | 107 | 75 | M4 |
| DR012A0202 | 150 | 150 | 112 | 6*12 | 88 | 107 | 75 | M4 |
| DR018A0117 | 150 | 155 | 112 | 6*12 | 88 | 107 | 75 | M4 |
| DR024AP881 | 150 | 155 | 112 | 6*12 | 88 | 107 | 75 | M4 |
| DR032AP660 | 180 | 175 | 138 | 6*12 | 114 | 122 | 85 | M6 |

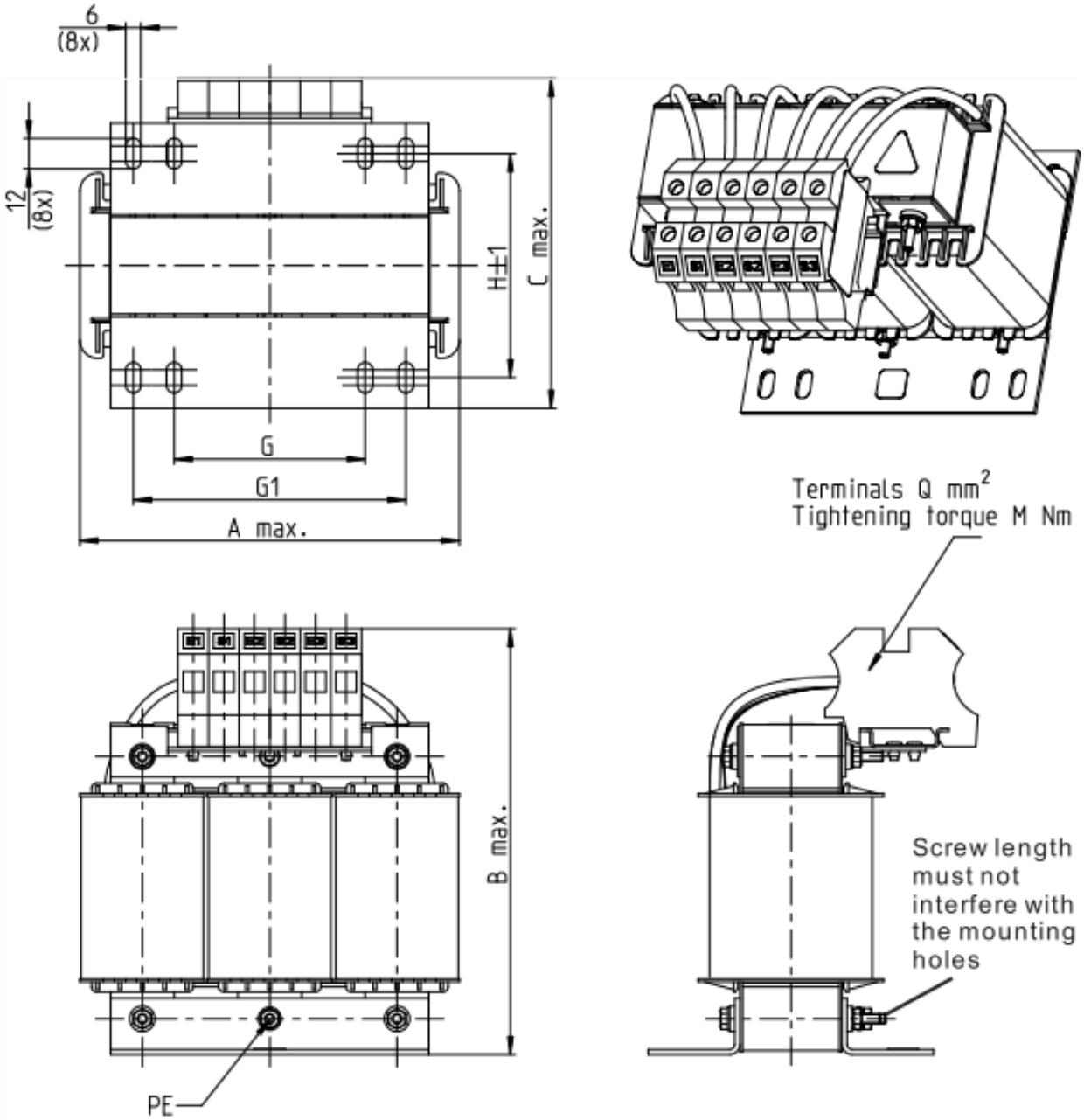


Unit: mm

| Input AC reactor Delta part # | A | B | C | D1*D2 | H | G | G1 | Q | M | PE D |
|---|---|---|---|---|---|---|---|---|---|---|
| DR038AP639 | 180 | 195 | 160 | 6*12 | 115 | 85 | 122 | 16 | 1.2~1.4 | M4 |
| DR045AP541 | 235 | 235 | 145 | 7*13 | 85 | / | 176 | 16 | 1.2~1.4 | M6 |

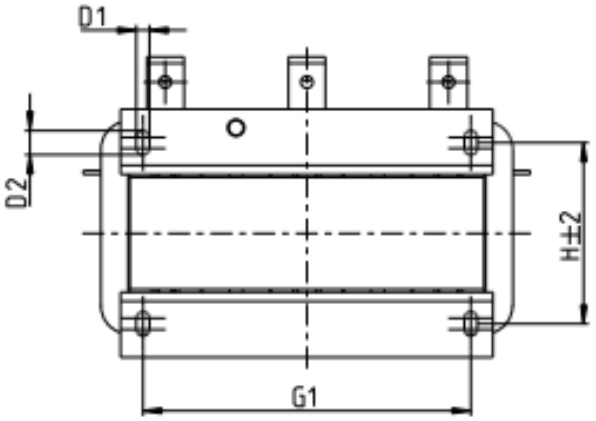


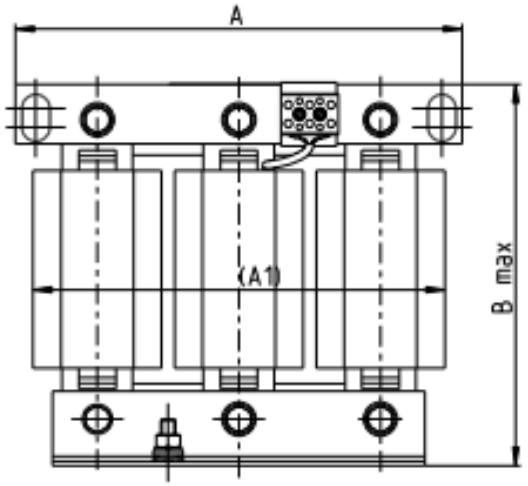


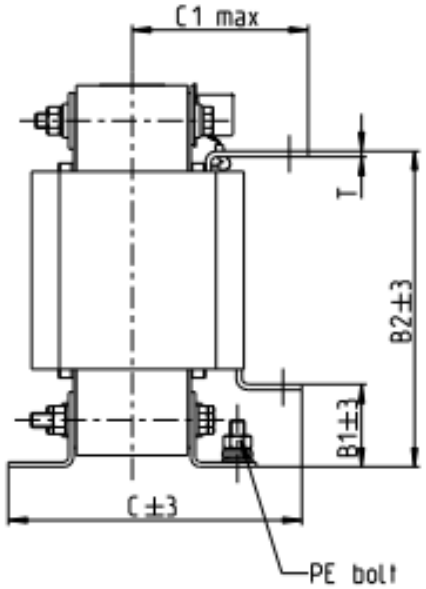


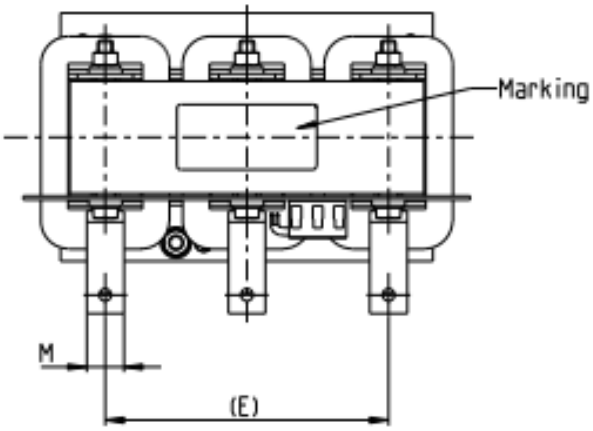


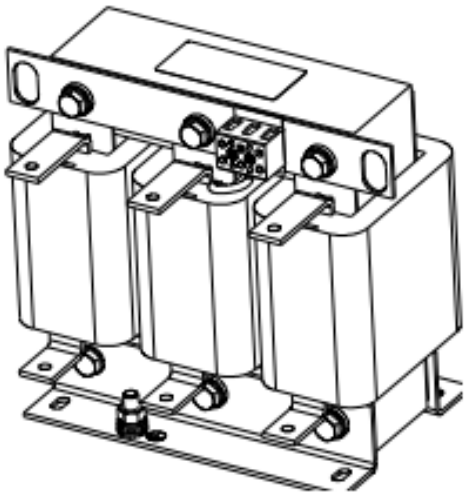

Unit: mm

| Input AC reactor Delta part # | A | A1 | B | B1 | B2 | C | C1 | D1*D2 | E | G1 | H | M*T | PE |
|---|---|---|---|---|---|---|---|---|---|---|---|---|---|
| DR060AP405 | 240 | 225 | 210 | 44 | 170 | 163 | 100 | 7*13 | 152 | 176 | 97 | 20*3 | M8 |
| DR073AP334 | 250 | 230 | 225 | 44 | 186 | 174 | 105 | 11*18 | 160 | 190 | 124 | 20*3 | M8 |
| DR091AP267 | 250 | 235 | 225 | 44 | 186 | 174 | 105 | 11*18 | 160 | 190 | 124 | 20*3 | M8 |
| DR110AP221 | 270 | 255 | 235 | 50 | 192 | 175 | 105 | 10*18 | 176 | 200 | 106 | 20*3 | M8 |

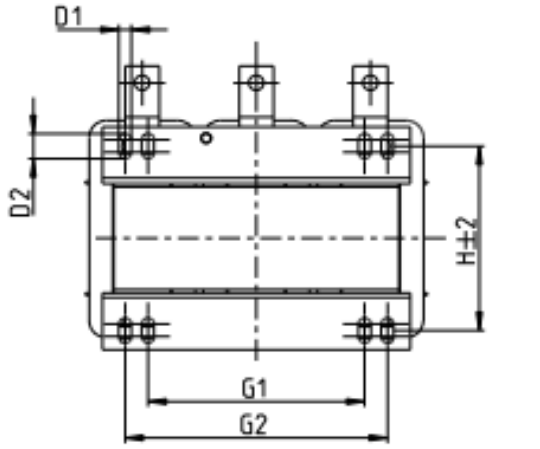


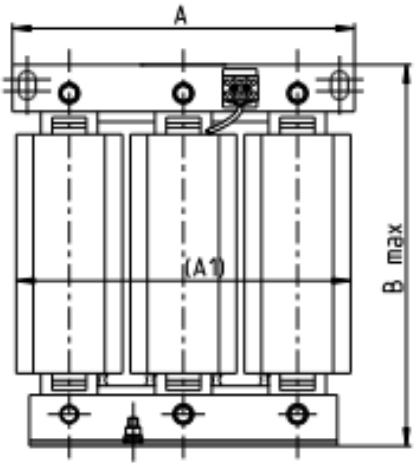


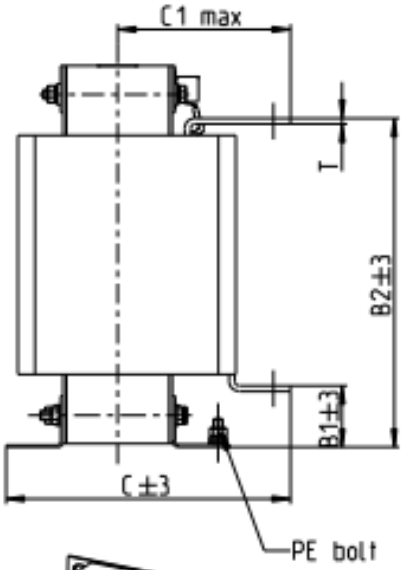


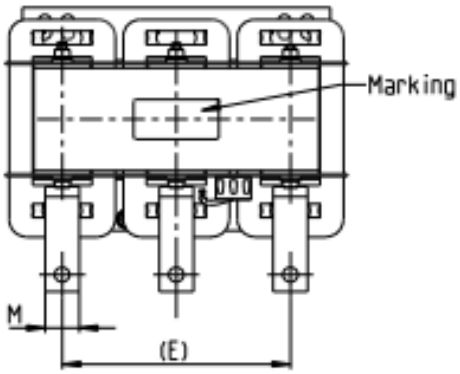


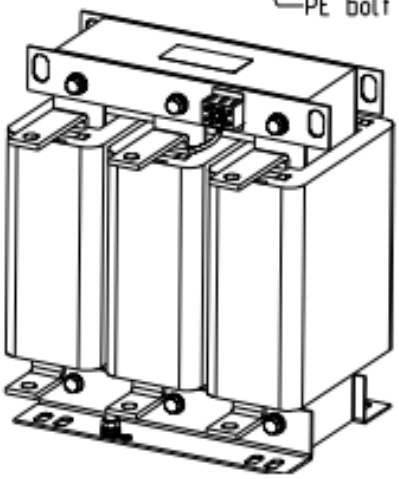

Unit: mm

| Input AC reactor Delta part # | A | A1 | B | B1 | B2 | C | C1 | D1*D2 | E | G1 | G2 | H | M*T |
|---|---|---|---|---|---|---|---|---|---|---|---|---|---|
| DR150AP162 | 270 | 260 | 260 | 51 | 208 | 195 | 120 | 10*18 | 176 | 200 | / | 118 | 30*3 |
| DR180AP135 | 300 | 290 | 300 | 55 | 246 | 195 | 115 | 11*22 | 200 | 230 | 190 | 142 | 30*3 |
| DR220AP110 | 300 | 295 | 300 | 57 | 248 | 210 | 130 | 11*22 | 200 | 230 | 190 | 142 | 30*5 |
| DR260AP098 | 300 | 290 | 330 | 56 | 270 | 227 | 140 | 11*22 | 200 | 230 | 190 | 160 | 30*5 |
| DR310AP078 | 300 | 295 | 340 | 54 | 288 | 233 | 145 | 11*22 | 200 | 230 | 190 | 160 | 30*5 |
| DR370AP066 | 300 | 295 | 340 | 54 | 289 | 268 | 168 | 11*22 | 200 | 230 | 190 | 185 | 40*3 |

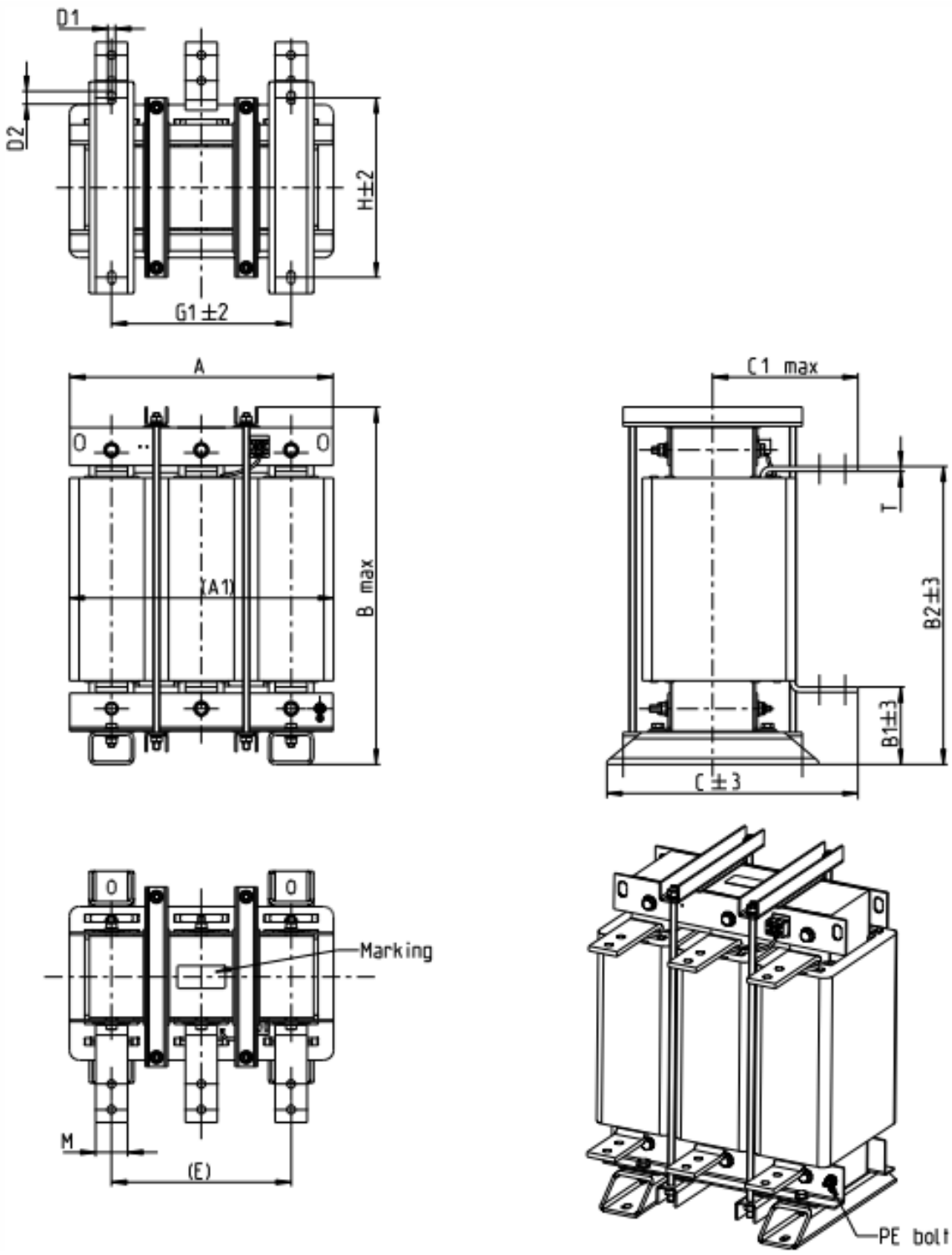


Unit: mm

| Input AC reactor Delta part # | A | A1 | B | B1 | B2 | C | C1 | D1*D2 | E | G1 | H | M*T | PE |
|---|---|---|---|---|---|---|---|---|---|---|---|---|---|
| DR460AP054 | 360 | 350 | 490 | 106 | 401 | 346 | 205 | 12*20 | 240 | 240 | 240 | 50*5 | M8 |
| DR550AP044 | 360 | 350 | 490 | 106 | 401 | 358 | 210 | 12*20 | 240 | 240 | 250 | 50*5 | M8 |
| DR616AP039 | 360 | 350 | 490 | 110 | 401 | 376 | 225 | 12*20 | 240 | 240 | 270 | 50*8 | M8 |
| DR683AP036 | 360 | 350 | 490 | 110 | 404 | 396 | 232 | 12*20 | 240 | 240 | 290 | 50*8 | M8 |
| DR866AP028 | 410 | 415 | 562 | 120 | 464 | 402 | 232 | 12*20 | 280 | 280 | 290 | 50*8 | M8 |

## DC Reactor

DC reactor can also increase line impedance, improve power factor, reduce input current, increase system capacity and reduce interference generated from motor drive. In addition, DC reactor can stabilize DC side voltage of motor drive. In contrast to AC input reactor, the advantages are smaller size, lower price and lower voltage drop (lower power dissipation)

### Installation

DC reactor is installed in the terminal +1 and +2. The jumper needs to be removed before installation, which is shown as below:

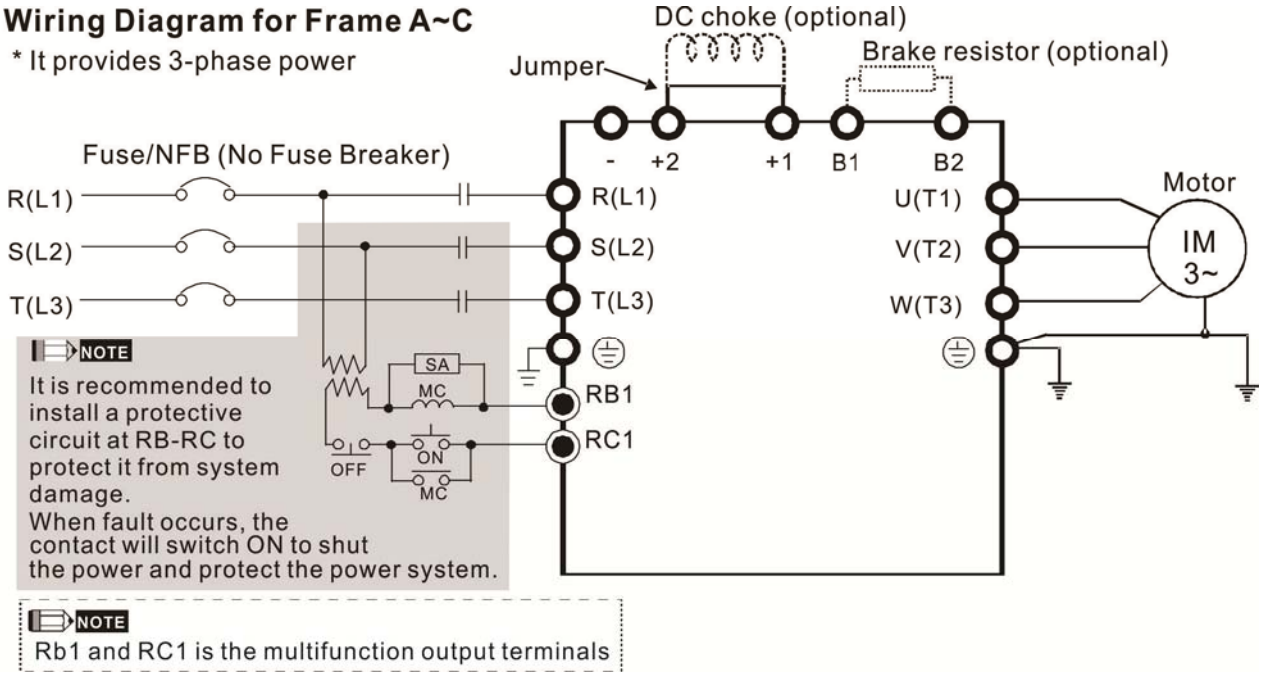


Wiring of DC reactor

### Specifications of DC reactors (standard item)

The following table shows the specifications of DC reactors (standard items) for Delta CP2000 series products.

200V~230V/ 50~60Hz

| Model | kW | HP | Rated Amps of DC Reactor [Arms] | | Max. continuous Amps [Arms] | | DC impedance [mH] | | DC Reactor Delta part # | |
|---|---|---|---|---|---|---|---|---|---|---|
| | | | Normal Duty | Light Duty | Normal Duty | Light Duty | Normal Duty | Light Duty | Normal Duty | Light Duty |
| 007 | 0.75 | 1 | 4.6 | 5 | 7.36 | 6 | 5.857 | 5.857 | DR005D0585 | DR005D0585 |
| 015 | 1.5 | 2 | 5 | 7.5 | 8 | 9 | 5.857 | 3.66 | DR005D0585 | DR008D0366 |
| 022 | 2.2 | 3 | 8 | 10 | 12.8 | 12 | 3.66 | 2.662 | DR008D0366 | DR011D0266 |
| 037 | 3.7 | 5 | 11 | 15 | 17.6 | 18 | 2.662 | 1.722 | DR011D0266 | DR017D0172 |
| 055 | 5.5 | 7.5 | 17 | 21 | 27.2 | 25.2 | 1.722 | 1.172 | DR017D0172 | DR025D0117 |
| 075 | 7.5 | 10 | 25 | 31 | 40 | 37.2 | 1.172 | 0.851 | DR025D0117 | DR033DP851 |
| 110 | 11 | 15 | 33 | 46 | 52.8 | 55.2 | 0.851 | 0.574 | DR033DP851 | DR049DP574 |
| 150 | 15 | 20 | 49 | 61 | 78.4 | 73.2 | 0.574 | 0.432 | DR049DP574 | DR065DP432 |
| 185 | 18.5 | 25 | 65 | 75 | 104 | 90 | 0.432 | 0.391 | DR065DP432 | DR075DP391 |

| Model | kW | HP | Rated Amps of DC Reactor [Arms] | | Max. continuous Amps [Arms] | | DC impedance [mH] | | DC Reactor Delta part # | |
|---|---|---|---|---|---|---|---|---|---|---|
| | | | Normal Duty | Light Duty | Normal Duty | Light Duty | Normal Duty | Light Duty | Normal Duty | Light Duty |
| 220 | 22 | 30 | 75 | 90 | 120 | 108 | 0.391 | 0.325 | DR075DP391 | DR090DP325 |
| 300 | 30 | 40 | 90 | 105 | 144 | 126 | 0.325 | 0.244 | DR090DP325 | N/A |

380V~460V/ 50~60Hz

| Model | kW | HP | Rated Amps of DC Reactor [Arms] | | Max. continuous Amps [Arms] | | DC impedance [mH] | | DC Reactor Delta part # | |
|---|---|---|---|---|---|---|---|---|---|---|
| | | | Normal Duty | Light Duty | Normal Duty | Light Duty | Normal Duty | Light Duty | Normal Duty | Light Duty |
| 007 | 0.75 | 1 | 2.8 | 3 | 4.48 | 3.6 | 18.709 | 18.709 | DR003D1870 | DR003D1870 |
| 015 | 1.5 | 2 | 3 | 4.2 | 4.8 | 5.04 | 18.709 | 14.031 | DR003D1870 | DR004D1403 |
| 022 | 2.2 | 3 | 4 | 5.5 | 6.4 | 6.6 | 14.031 | 9.355 | DR004D1403 | DR006D0935 |
| 037 | 3.7 | 5 | 6 | 8.5 | 9.6 | 10.2 | 9.355 | 6.236 | DR006D0935 | DR009D0623 |
| 040 | 4 | 5 | 9 | 10.5 | 14.4 | 12.6 | 6.236 | 5.345 | DR009D0623 | DR010D0534 |
| 055 | 5.5 | 7.5 | 10.5 | 13 | 16.8 | 15.6 | 5.345 | 4.677 | DR010D0534 | DR012D0467 |
| 075 | 7.5 | 10 | 12 | 18 | 19.2 | 21.6 | 4.677 | 3.119 | DR012D0467 | DR018D0311 |
| 110 | 11 | 15 | 18 | 24 | 28.8 | 28.8 | 3.119 | 2.338 | DR018D0311 | DR024D0233 |
| 150 | 15 | 20 | 24 | 32 | 38.4 | 38.4 | 2.338 | 1.754 | DR024D0233 | DR032D0175 |
| 185 | 18.5 | 25 | 32 | 38 | 51.2 | 45.6 | 1.754 | 1.477 | DR032D0175 | DR038D0147 |
| 220 | 22 | 30 | 38 | 45 | 60.8 | 54 | 1.477 | 1.247 | DR038D0147 | DR045D0124 |
| 300 | 30 | 40 | 45 | 60 | 72 | 72 | 1.247 | 0.935 | DR045D0124 | DR060DP935 |
| 370 | 37 | 50 | 60 | 73 | 96 | 87.6 | 0.935 | 0.768 | DR060DP935 | N/A |

DC reactor dimension and specification:

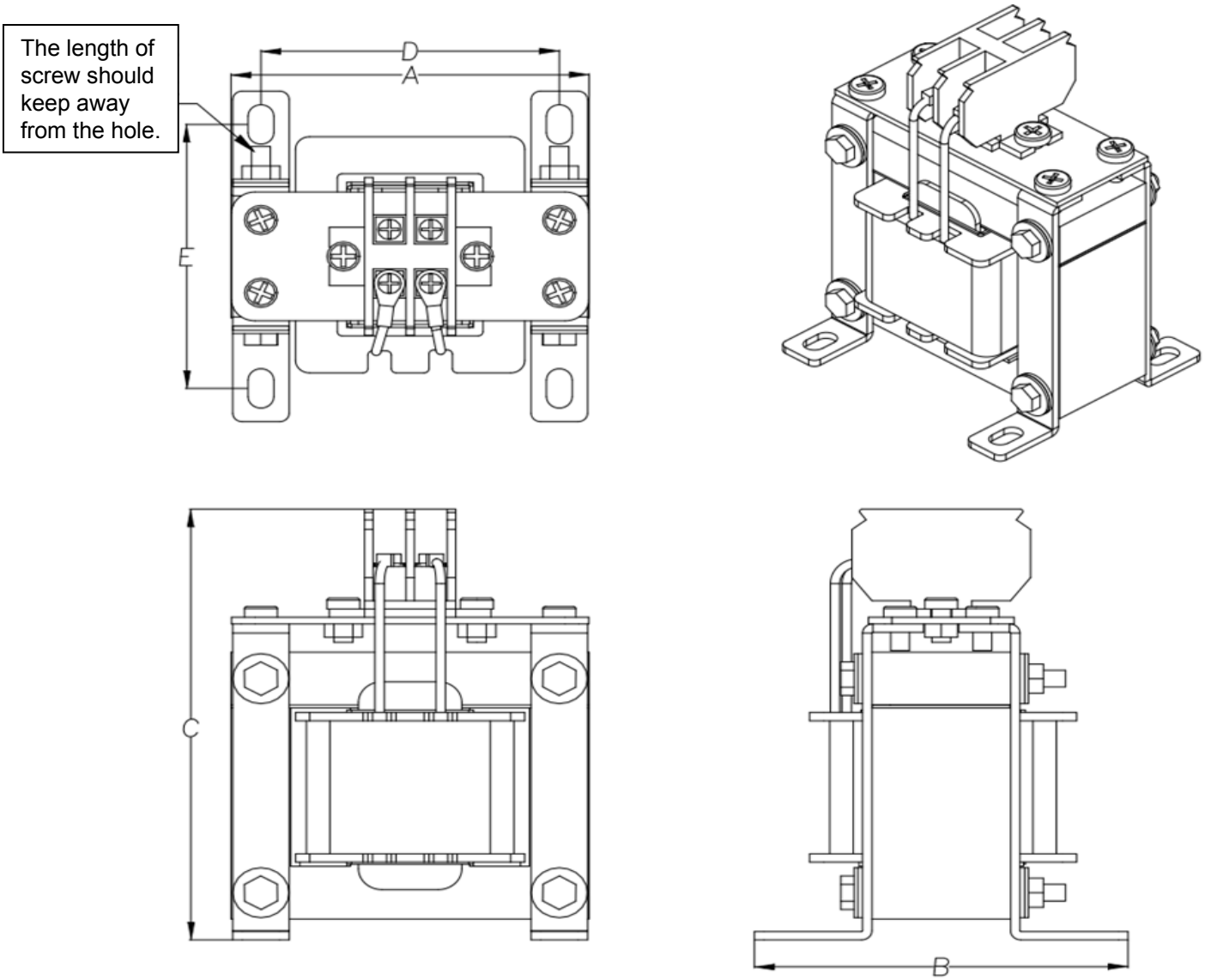


| DC reactor Delta part # | A (mm) | B (mm) | C (mm) | D (mm) | E (mm) | Dimensions (mm) |
|---|---|---|---|---|---|---|
| DR005D0585 | 79 | 78 | 107 | 64 | 59 | 9.5*5.5 |
| DR008D0366 | 79 | 82 | 107 | 63.5 | 63.5 | 9.5*5.5 |
| DR011D0266 | 99 | 96 | 128 | 80 | 72.5 | 9*6 |
| DR017D0172 | 99 | 102 | 128 | 80 | 80 | 9*6 |
| DR025D0117 | 117 | 107 | 154 | 95 | 86 | 12*8 |
| DR033DP851 | 117 | 113 | 154 | 95 | 92 | 12*8 |
| DR049DP574 | 136 | 123 | 170 | 111 | 100 | 12*8 |
| DR065DP432 | 136 | 133 | 170 | 111 | 110 | 12*8 |
| DR075DP391 | 153 | 150 | 191 | 125 | 127 | 12*8 |
| DR090DP325 | 153 | 154 | 191 | 125 | 131 | 12*8 |
| DR003D1870 | 79 | 82 | 107 | 63.5 | 64 | 9.5*5.5 |
| DR004D1403 | 79 | 87 | 107 | 63.5 | 68.5 | 9.5*5.5 |
| DR006D0935 | 99 | 92 | 128 | 80 | 68.5 | 9*6 |
| DR009D0623 | 99 | 104 | 128 | 80 | 81.5 | 9*6 |
| DR010D0534 | 99 | 108 | 128 | 80 | 85 | 9*6 |
| DR012D0467 | 99 | 119 | 128 | 80 | 96 | 9*6 |
| DR018D0311 | 117 | 127 | 142 | 95 | 106 | 12*8 |
| DR024D0233 | 117 | 134 | 143 | 95 | 113 | 12*8 |
| DR032D0175 | 136 | 131 | 170 | 111 | 108 | 12*8 |
| DR038D0147 | 153 | 143 | 186 | 125 | 120 | 12*8 |
| DR045D0124 | 153 | 149 | 186 | 125 | 126 | 12*8 |

The following table is spec. of THDi that Delta AC motor drives use with AC/DC reactors.

| AC motor drive | Without built-in DC reactor (Frame A~C) | | | | With built-in DC reactor (Frame D and above) | | |
|---|---|---|---|---|---|---|---|
| Spec. of reactor (series-connected) | Without adding input AC/DC reactor | 3% Input AC Reactor | 5% Input AC Reactor | 4% DC Reactor | Built-in DC reactor, and without adding input AC/DC reactor | 3% Input AC Reactor | 5% Input AC Reactor |
| 5th | 73.3% | 38.5% | 30.8% | 25.5% | 31.16% | 27.01% | 25.5% |
| 7th | 52.74% | 15.3% | 9.4% | 18.6% | 23.18% | 9.54% | 8.75% |
| 11th | 7.28% | 7.1% | 6.13% | 7.14% | 8.6% | 4.5% | 4.2% |
| 13th | 0.4% | 3.75% | 3.15% | 0.48% | 7.9% | 0.22% | 0.17% |
| THDi | 91% | 43.6% | 34.33% | 38.2% | 42.28% | 30.5% | 28.4% |
| Note: | THDi may have some difference due to different installation conditions and environment | | | | | | |

Spec. of THDi

## AC Output Reactor

If the length of cable between AC motor drive and motor is too long, it may make AC motor drive trigger protection mechanism for GF (Ground Fault), OV (Over Current) and the AC motor drive stops running. The cause is the over long motor cable will generate extremely large stray capacitance, make common mode current of 3-phase output get too large and then trigger GF protection mechanism; OC protection is triggered which is caused by stray capacitance of cable-cable and cable-ground are getting larger, and its surge current makes AC motor drive output over large current. To prevent from the common mode current that stray capacitance generates, set up AC output reactor between AC motor drive and motor to increase the high frequency impedance.

Power transistor is switched via PWM to control the output voltage and frequency for AC motor drive. During the switch process, impulse voltage (dv/dt) rises and falls rapidly will make inner voltage of motor distribute unequally, and then the isolation of motor will be getting worse, and have interference of bearing current and electromagnet. Especially when AC motor drive and motor are connected by long leading wire, the influence of damping of high frequency resonance and reflected voltage that caused by cable spreading parameters is getting large, and it will generate twice incoming voltage at motor side to be over voltage, destroy the isolation.

### Installation

AC output reactor is serially connected between motor drive UVW output side and motor, which is shown as below:

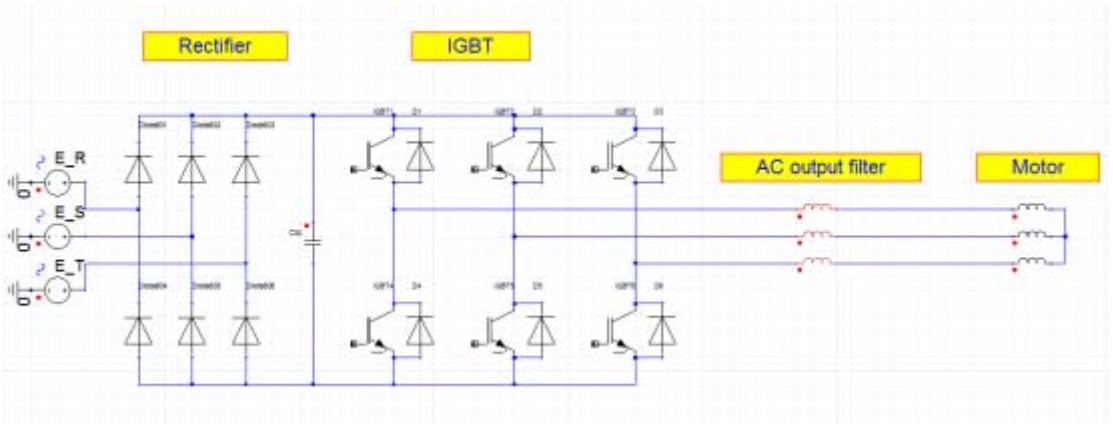


Wiring of AC output reactor

Specifications of AC output reactors (standard item)

The following table shows the specifications of AC output reactors (standard items) for Delta CP2000 series products, and their part numbers to choose:

200V~230V/ 50~60Hz

| Model | kW | HP | Rated Amps of AC Reactor (Arms) | | Max. continuous Amps (Arms) | | 3% impedance (mH) | | 5% impedance (mH) | | Built-in DC reactor | 3% Input AC reactor Delta part # | |
|---|---|---|---|---|---|---|---|---|---|---|---|---|---|
| | | | Normal Duty | Light Duty | Normal Duty | Light Duty | Normal Duty | Light Duty | Normal Duty | Light Duty | | Normal Duty | Light Duty |
| 007 | 0.75 | 1 | 4.6 | 5 | 7.36 | 6 | 2.536 | 2.536 | 4.227 | 4.227 | No | N/A | N/A |
| 015 | 1.5 | 2 | 5 | 7.5 | 8 | 9 | 2.536 | 1.585 | 4.227 | 2.642 | No | N/A | N/A |
| 022 | 2.2 | 3 | 8 | 10 | 12.8 | 12 | 1.585 | 1.152 | 2.642 | 1.922 | No | N/A | N/A |
| 037 | 3.7 | 5 | 11 | 15 | 17.6 | 18 | 1.152 | 0.746 | 1.922 | 1.243 | No | N/A | N/A |
| 055 | 5.5 | 7.5 | 17 | 21 | 27.2 | 25.2 | 0.746 | 0.507 | 1.243 | 0.845 | No | N/A | N/A |
| 075 | 7.5 | 10 | 25 | 31 | 40 | 37.2 | 0.507 | 0.38 | 0.845 | 0.633 | No | N/A | N/A |
| 110 | 11 | 15 | 33 | 46 | 52.8 | 55.2 | 0.38 | 0.26 | 0.633 | 0.433 | No | N/A | N/A |
| 150 | 15 | 20 | 49 | 61 | 78.4 | 73.2 | 0.26 | 0.196 | 0.433 | 0.327 | No | N/A | N/A |
| 185 | 18.5 | 25 | 65 | 75 | 104 | 90 | 0.196 | 0.169 | 0.327 | 0.282 | No | N/A | N/A |
| 220 | 22 | 30 | 75 | 90 | 120 | 108 | 0.169 | 0.141 | 0.282 | 0.235 | No | N/A | N/A |
| 300 | 30 | 40 | 90 | 105 | 144 | 126 | 0.141 | 0.12 | 0.235 | 0.2 | No | N/A | N/A |
| 370 | 37 | 50 | 120 | 146 | 192 | 175.2 | 0.12 | 0.087 | 0.2 | 0.145 | Yes | N/A | N/A |
| 450 | 45 | 60 | 146 | 180 | 233.6 | 216 | 0.087 | 0.07 | 0.145 | 0.117 | Yes | N/A | N/A |
| 550 | 55 | 75 | 180 | 215 | 288 | 258 | 0.07 | 0.059 | 0.117 | 0.098 | Yes | N/A | N/A |
| 750 | 75 | 100 | 215 | 276 | 344 | 331.2 | 0.059 | 0.049 | 0.098 | 0.083 | Yes | N/A | N/A |
| 900 | 90 | 125 | 255 | 322 | 408 | 386.4 | 0.049 | 0.037 | 0.083 | 0.061 | Yes | N/A | N/A |

380V~460V/ 50~60Hz

| Model | kW | HP | Rated Amps of AC Reactor (Arms) | | Max. continuous Amps (Arms) | | 3% impedance (mH) | | 5% impedance (mH) | | Built-in DC reactor | 3% Input AC reactor Delta part # | |
|---|---|---|---|---|---|---|---|---|---|---|---|---|---|
| | | | Normal Duty | Light Duty | Normal Duty | Light Duty | Normal Duty | Light Duty | Normal Duty | Light Duty | | Light Duty | Normal Duty |
| 007 | 0.75 | 1 | 2.8 | 3 | 4.48 | 3.6 | 8.102 | 8.102 | 13.502 | 13.502 | No | N/A | N/A |
| 015 | 1.5 | 2 | 3 | 4.2 | 4.8 | 5.04 | 8.102 | 6.077 | 13.502 | 10.127 | No | N/A | N/A |
| 022 | 2.2 | 3 | 4 | 5.5 | 6.4 | 6.6 | 6.077 | 4.050 | 10.127 | 6.752 | No | N/A | N/A |
| 037 | 3.7 | 5 | 6 | 8.5 | 9.6 | 10.2 | 4.050 | 2.700 | 6.752 | 4.501 | No | N/A | N/A |
| 040 | 4 | 5 | 9 | 10.5 | 14.4 | 12.6 | 2.700 | 2.315 | 4.501 | 3.858 | No | N/A | N/A |
| 055 | 5.5 | 7.5 | 10.5 | 13 | 16.8 | 15.6 | 2.315 | 2.025 | 3.858 | 3.375 | No | N/A | N/A |
| 075 | 7.5 | 10 | 12 | 18 | 19.2 | 21.6 | 2.025 | 1.35 | 3.375 | 2.25 | No | N/A | N/A |
| 110 | 11 | 15 | 18 | 24 | 28.8 | 28.8 | 1.174 | 1.01 | 1.957 | 1.683 | No | N/A | N/A |
| 150 | 15 | 20 | 24 | 32 | 38.4 | 38.4 | 0.881 | 0.76 | 1.468 | 1.267 | No | N/A | N/A |
| 185 | 18.5 | 25 | 32 | 38 | 51.2 | 45.6 | 0.660 | 0.639 | 1.101 | 1.066 | No | N/A | N/A |
| 220 | 22 | 30 | 38 | 45 | 60.8 | 54 | 0.639 | 0.541 | 1.066 | 0.900 | No | N/A | N/A |
| 300 | 30 | 40 | 45 | 60 | 72 | 72 | 0.541 | 0.405 | 0.900 | 0.675 | No | N/A | N/A |
| 370 | 37 | 50 | 60 | 73 | 96 | 87.6 | 0.405 | 0.334 | 0.675 | 0.555 | No | N/A | N/A |
| 450 | 45 | 60 | 73 | 91 | 116.8 | 109.2 | 0.334 | 0.267 | 0.555 | 0.445 | Yes | N/A | N/A |
| 550 | 55 | 75 | 91 | 110 | 145.6 | 132 | 0.267 | 0.221 | 0.445 | 0.368 | Yes | N/A | N/A |

| Model | kW | HP | Rated Amps of AC Reactor (Arms) | | Max. continuous Amps (Arms) | | 3% impedance (mH) | | 5% impedance (mH) | | Built-in DC reactor | 3% Input AC reactor Delta part # | |
|---|---|---|---|---|---|---|---|---|---|---|---|---|---|
| | | | Normal Duty | Light Duty | Normal Duty | Light Duty | Normal Duty | Light Duty | Normal Duty | Light Duty | | Light Duty | Normal Duty |
| 750 | 75 | 100 | 110 | 150 | 176 | 180 | 0.221 | 0.162 | 0.368 | 0.270 | Yes | N/A | N/A |
| 900 | 90 | 125 | 150 | 180 | 240 | 216 | 0.162 | 0.135 | 0.270 | 0.225 | Yes | N/A | N/A |
| 1100 | 110 | 150 | 180 | 220 | 288 | 264 | 0.135 | 0.110 | 0.225 | 0.184 | Yes | N/A | N/A |
| 1320 | 132 | 175 | 220 | 260 | 352 | 312 | 0.110 | 0.098 | 0.184 | 0.162 | Yes | N/A | N/A |
| 1600 | 160 | 215 | 260 | 310 | 416 | 372 | 0.098 | 0.078 | 0.162 | 0.131 | Yes | N/A | N/A |
| 1850 | 185 | 250 | 310 | 370 | 496 | 444 | 0.078 | 0.066 | 0.131 | 0.109 | Yes | N/A | N/A |
| 2200 | 220 | 300 | 370 | 460 | 592 | 552 | 0.066 | 0.054 | 0.109 | 0.090 | Yes | N/A | N/A |
| 2800 | 280 | 375 | 460 | 530 | 736 | 636 | 0.054 | 0.044 | 0.090 | 0.074 | Yes | N/A | N/A |
| 3150 | 315 | 420 | 550 | 616 | 880 | 739.2 | 0.044 | 0.039 | 0.074 | 0.066 | Yes | N/A | N/A |
| 3550 | 355 | 475 | 616 | 683 | 985.6 | 819.6 | 0.039 | 0.036 | 0.066 | 0.060 | Yes | N/A | N/A |
| 4500 | 450 | 600 | 683 | 770 | 1092.8 | 924 | 0.036 | 0.028 | 0.060 | 0.047 | Yes | N/A | N/A |
| 5000 | 500 | 675 | 866 | 912 | 1385.6 | 1094.4 | 0.028 | 0.028 | 0.047 | 0.047 | Yes | N/A | N/A |

575V/ 50~60Hz, 3-phase

| Model | kW | HP | Rated Amps of AC Reactor (Arms) | | | Max. continuous Amps (Arms) | 3% impedance (mH) | | | 5% impedance (mH) | | |
|---|---|---|---|---|---|---|---|---|---|---|---|---|
| | | | Light Duty | Normal Duty | Heavy duty | | Light Duty | Normal Duty | Heavy duty | Light Duty | Normal Duty | Heavy duty |
| 015 | 1.5 | 2 | 3 | 2.5 | 2.1 | 4.2 | 8.806 | 10.567 | 12.580 | 14.677 | 17.612 | 20.967 |
| 022 | 2.2 | 3 | 4.3 | 3.6 | 3 | 5.9 | 6.144 | 7.338 | 8.806 | 10.239 | 12.230 | 14.677 |
| 037 | 3.7 | 5 | 6.7 | 5.5 | 4.6 | 9.1 | 3.943 | 4.803 | 5.743 | 6.572 | 8.005 | 9.572 |
| 055 | 5.5 | 7.5 | 9.9 | 8.2 | 6.9 | 13.7 | 2.668 | 3.222 | 3.829 | 4.447 | 5.369 | 6.381 |
| 075 | 7.5 | 10 | 12.1 | 10 | 8.3 | 16.5 | 2.183 | 2.642 | 3.183 | 3.639 | 4.403 | 5.305 |
| 110 | 11 | 15 | 18.7 | 15.5 | 13 | 25.7 | 1.413 | 1.704 | 2.032 | 2.355 | 2.841 | 3.387 |
| 150 | 15 | 20 | 24.2 | 20 | 16.8 | 33.3 | 1.092 | 1.321 | 1.572 | 1.819 | 2.201 | 2.621 |

690V/ 50~60Hz, 3-phase

| Model | kW | HP | Rated Amps of AC Reactor (Arms) | | | Max. continuous Amps (Arms) | | | 3% impedance (mH) | | | 5% impedance (mH) | | |
|---|---|---|---|---|---|---|---|---|---|---|---|---|---|---|
| | | | LD* | ND* | HD* | LD | ND | HD | LD | ND | HD | LD | ND | HD |
| 185 | 18.5 | 25 | 24 | 20 | 14 | 28.8 | 30.0 | 25.2 | 1.585 | 1.902 | 2.717 | 2.642 | 3.170 | 4.529 |
| 220 | 22 | 30 | 30 | 24 | 20 | 36.0 | 36.0 | 36.0 | 1.268 | 1.585 | 1.902 | 2.113 | 2.642 | 3.170 |
| 300 | 30 | 40 | 36 | 30 | 24 | 43.2 | 45.0 | 43.2 | 1.057 | 1.268 | 1.585 | 1.761 | 2.113 | 2.642 |
| 370 | 37 | 50 | 45 | 36 | 30 | 54.0 | 54.0 | 54.0 | 0.845 | 1.057 | 1.268 | 1.409 | 1.761 | 2.113 |
| 450 | 45 | 60 | 54 | 45 | 36 | 64.8 | 67.5 | 64.8 | 0.704 | 0.845 | 1.057 | 1.174 | 1.409 | 1.761 |
| 550 | 55 | 75 | 67 | 54 | 45 | 80.4 | 81.0 | 81.0 | 0.568 | 0.704 | 0.845 | 0.946 | 1.174 | 1.409 |
| 750 | 75 | 100 | 86 | 67 | 54 | 103.2 | 100.5 | 97.2 | 0.442 | 0.568 | 0.704 | 0.737 | 0.946 | 1.174 |
| 900 | 90 | 125 | 104 | 86 | 67 | 124.8 | 129.0 | 120.6 | 0.366 | 0.442 | 0.568 | 0.610 | 0.737 | 0.946 |
| 1100 | 110 | 150 | 125 | 104 | 86 | 150.0 | 156.0 | 154.8 | 0.304 | 0.366 | 0.442 | 0.507 | 0.610 | 0.737 |
| 1320 | 132 | 175 | 150 | 125 | 104 | 180.0 | 187.5 | 187.2 | 0.254 | 0.304 | 0.366 | 0.423 | 0.507 | 0.610 |
| 1600 | 160 | 215 | 180 | 150 | 125 | 216.0 | 225.0 | 225.0 | 0.211 | 0.254 | 0.304 | 0.352 | 0.423 | 0.507 |
| 2000 | 200 | 270 | 220 | 180 | 150 | 264.0 | 270.0 | 270.0 | 0.173 | 0.211 | 0.254 | 0.288 | 0.352 | 0.423 |
| 2500 | 250 | 335 | 290 | 220 | 180 | 348.0 | 330.0 | 324.0 | 0.131 | 0.173 | 0.211 | 0.219 | 0.288 | 0.352 |
| 3150 | 315 | 425 | 350 | 290 | 220 | 420.0 | 435.0 | 396.0 | 0.109 | 0.131 | 0.173 | 0.181 | 0.219 | 0.288 |

| Model | kW | HP | Rated Amps of AC Reactor (Arms) | | | Max. continuous Amps (Arms) | | | 3% impedance (mH) | | | 5% impedance (mH) | | |
|---|---|---|---|---|---|---|---|---|---|---|---|---|---|---|
| | | | LD* | ND* | HD* | LD | ND | HD | LD | ND | HD | LD | ND | HD |
| 4000 | 400 | 530 | 430 | 350 | 290 | 516.0 | 525.0 | 522.0 | 0.088 | 0.109 | 0.131 | 0.147 | 0.181 | 0.219 |
| 4500 | 450 | 600 | 465 | 385 | 310 | 558.0 | 577.5 | 558.0 | 0.082 | 0.099 | 0.123 | 0.136 | 0.165 | 0.205 |
| 5600 | 560 | 745 | 590 | 465 | 420 | 708.0 | 697.5 | 756.0 | 0.064 | 0.082 | 0.091 | 0.107 | 0.136 | 0.151 |
| 6300 | 630 | 850 | 675 | 675 | 675 | 810.0 | 1012.5 | 1215.0 | 0.056 | 0.056 | 0.056 | 0.094 | 0.094 | 0.094 |

※ LD: Light Duty; ND: Normal Duty; HD: Heavy Duty

## Motor Cable Length

1. Leakage current to affect the motor and counter measurement

If the cable length is too long, the parasitic capacitance between cables will enlarge and may increase leakage current. It will activate the protection of over current, and increased leakage current will not ensure the correction of current value in display. The worst case is that AC motor drive may damage.

If more than one motor is connected to the AC motor drive, the total wiring length is the sum of the wiring length from AC motor drive to each motor.

For the 460V series AC motor drive, when an overload relay is installed between the drive and the motor to protect motor from overheating, the connecting cable must be shorter than 50m. However, an overload relay malfunction may still occur. To prevent the malfunction, install an output reactor (optional) to the drive or lower the carrier frequency setting (Pr. 00-17).

2. Surge voltage to affect the motor and counter measurement

When motor is driven by a PWM signal of AC motor drive, the motor terminals will experience surge voltages (dv/dt) easily due to power transistors conversion of AC motor drive and cable capacitance. When the motor cable is very long (especially for the 460V series), surge voltages (dv/dt) may reduce insulation quality. To prevent this situation, please follow the rules below:

a. Use a motor with enhanced insulation
b. Connect an output reactor (optional) to the output terminals of the AC motor drive
c. Reduce the motor cable length to suggested value

The suggested motor shielded cable length in the following table complies with IEC 60034-17, which is suitable for the motor with rated voltage under 500 VAC, and the insulation level of peak to peak over (including) 1.35kV

| 230V Model | kW | HP | Rated current (Arms) | | Without AC output reactor | | With AC output reactor | |
|---|---|---|---|---|---|---|---|---|
| | | | Normal Duty | Light Duty | Shielded Cable (meter) | Non-shielded cable (meter) | Shielded Cable (meter) | Non-shielded cable (meter) |
| 007 | 0.75 | 1 | 4.6 | 5 | 50 | 75 | 75 | 115 |
| 015 | 1.5 | 2 | 5 | 7.5 | 50 | 75 | 75 | 115 |
| 022 | 2.2 | 3 | 8 | 10 | 50 | 75 | 75 | 115 |
| 037 | 3.7 | 5 | 11 | 15 | 50 | 75 | 75 | 115 |
| 040 | 4 | 5 | 17 | 21 | 50 | 75 | 75 | 115 |
| 055 | 5.5 | 7.5 | 25 | 31 | 100 | 150 | 150 | 225 |

| 230V Model | kW | HP | Rated current (Arms) | | Without AC output reactor | | With AC output reactor | |
|---|---|---|---|---|---|---|---|---|
| | | | Normal Duty | Light Duty | Shielded Cable (meter) | Non-shielded cable (meter) | Shielded Cable (meter) | Non-shielded cable (meter) |
| 075 | 7.5 | 10 | 33 | 46 | 100 | 150 | 150 | 225 |
| 150 | 15 | 20 | 49 | 61 | 100 | 150 | 150 | 225 |
| 185 | 18.5 | 25 | 65 | 75 | 100 | 150 | 150 | 225 |
| 220 | 22 | 30 | 75 | 90 | 100 | 150 | 150 | 225 |
| 300 | 30 | 40 | 90 | 120 | 100 | 150 | 150 | 225 |
| 370 | 37 | 50 | 120 | 146 | 100 | 150 | 150 | 225 |
| 450 | 45 | 60 | 146 | 180 | 150 | 225 | 225 | 325 |
| 550 | 55 | 75 | 180 | 215 | 150 | 225 | 225 | 325 |
| 750 | 75 | 100 | 215 | 276 | 150 | 225 | 225 | 325 |
| 900 | 90 | 125 | 255 | 322 | 150 | 225 | 225 | 325 |

| 460V Model | kW | HP | Rated current (Arms) | | Without AC output reactor | | With AC output reactor | |
|---|---|---|---|---|---|---|---|---|
| | | | Normal Duty | Light Duty | Shielded Cable (meter) | Non-shielded cable (meter) | Shielded Cable (meter) | Non-shielded cable (meter) |
| 007 | 0.75 | 1 | 2.8 | 3 | 50 | 75 | 75 | 115 |
| 015 | 1.5 | 2 | 3 | 4.2 | 50 | 75 | 75 | 115 |
| 022 | 2.2 | 3 | 4 | 5.5 | 50 | 75 | 75 | 115 |
| 037 | 3.7 | 5 | 6 | 8.5 | 50 | 75 | 75 | 115 |
| 040 | 4 | 5 | 9 | 10.5 | 50 | 75 | 75 | 115 |
| 055 | 5.5 | 7.5 | 10.5 | 13 | 50 | 75 | 75 | 115 |
| 075 | 7.5 | 10 | 12 | 18 | 100 | 150 | 150 | 225 |
| 110 | 11 | 15 | 18 | 24 | 100 | 150 | 150 | 225 |
| 150 | 15 | 20 | 24 | 32 | 100 | 150 | 150 | 225 |
| 185 | 18.5 | 25 | 32 | 38 | 100 | 150 | 150 | 225 |
| 220 | 22 | 30 | 38 | 45 | 100 | 150 | 150 | 225 |
| 300 | 30 | 40 | 45 | 60 | 100 | 150 | 150 | 225 |
| 370 | 37 | 50 | 60 | 73 | 100 | 150 | 150 | 225 |
| 450 | 45 | 60 | 73 | 91 | 150 | 225 | 225 | 325 |
| 550 | 55 | 75 | 91 | 110 | 150 | 225 | 225 | 325 |
| 750 | 75 | 100 | 110 | 150 | 150 | 225 | 225 | 325 |
| 900 | 90 | 125 | 150 | 180 | 150 | 225 | 225 | 325 |
| 1100 | 110 | 150 | 180 | 220 | 150 | 225 | 225 | 325 |
| 1320 | 132 | 175 | 220 | 260 | 150 | 225 | 225 | 325 |
| 1600 | 160 | 215 | 260 | 310 | 150 | 225 | 225 | 325 |
| 1850 | 185 | 250 | 310 | 370 | 150 | 225 | 225 | 325 |
| 2200 | 220 | 300 | 370 | 460 | 150 | 225 | 225 | 325 |
| 2800 | 280 | 375 | 460 | 530 | 150 | 225 | 225 | 325 |
| 3150 | 315 | 420 | 550 | 616 | 150 | 225 | 225 | 325 |
| 3550 | 355 | 475 | 616 | 683 | 150 | 225 | 225 | 325 |
| 4000 | 400 | 536 | 683 | 770 | 150 | 225 | 225 | 325 |
| 5000 | 500 | 675 | 866 | 912 | 150 | 225 | 225 | 325 |

| 575V Model | kW | HP | Rated current (Arms) Normal Duty | Without AC output reactor | | With AC output reactor | |
|---|---|---|---|---|---|---|---|
| | | | | Shielded Cable (meter) | Non-shielded cable (meter) | Shielded Cable (meter) | Non-shielded cable (meter) |
| VFD022CP53A-21 | 1.5 | 2 | 3.6 | 35 | 30 | 45 | 20 |
| VFD037CP53A-21 | 2.2 | 3 | 5.5 | 35 | 30 | 45 | 20 |
| VFD055CP53A-21 | 3.7 | 5 | 8.2 | 35 | 30 | 45 | 20 |
| VFD075CP53A-21 | 5.5 | 7.5 | 10 | 35 | 30 | 45 | 20 |
| VFD110CP53A-21 | 7.5 | 10 | 15.5 | 35 | 30 | 45 | 20 |
| VFD150CP53A-21 | 11 | 15 | 20 | 35 | 30 | 45 | 20 |

| 690V Model | kW | HP | Rated current (Arms) Normal Duty | Without AC output reactor | | With AC output reactor | |
|---|---|---|---|---|---|---|---|
| | | | | Shielded Cable (meter) | Non-shielded cable (meter) | Shielded Cable (meter) | Non-shielded cable (meter) |
| VFD185CP63A-21 | 18.5 | 25 | 20 | 20 | 35 | 30 | 45 |
| VFD220CP63A-21 | 22 | 30 | 24 | 20 | 35 | 30 | 45 |
| VFD300CP63A-21 | 30 | 40 | 30 | 20 | 35 | 45 | 60 |
| VFD370CP63A-21 | 37 | 50 | 36 | 20 | 45 | 60 | 75 |
| VFD450CP63A-00/21 | 45 | 60 | 45 | 20 | 45 | 60 | 75 |
| VFD550CP63A-00/21 | 55 | 75 | 54 | 20 | 45 | 60 | 100 |
| VFD750CP63A-00/21 | 75 | 100 | 67 | 20 | 45 | 60 | 100 |
| VFD900CP63A-00/21 | 90 | 125 | 86 | 20 | 45 | 75 | 100 |
| VFD1100CP63A-00/21 | 110 | 150 | 104 | 20 | 45 | 75 | 100 |
| VFD1320CP63A-00/21 | 132 | 175 | 125 | 20 | 45 | 75 | 100 |
| VFD1600CP63A-00/21 | 160 | 215 | 150 | 20 | 45 | 90 | 100 |
| VFD2000CP63A-00/21 | 200 | 270 | 180 | 20 | 45 | 90 | 100 |
| VFD2500CP63A-00/21 | 250 | 335 | 220 | 20 | 45 | 90 | 100 |
| VFD3150CP63A-00/21 | 315 | 425 | 290 | 20 | 45 | 90 | 100 |
| VFD4000CP63A-00/21 | 400 | 530 | 350 | 20 | 45 | 90 | 100 |
| VFD4500CP63A-00/21 | 450 | 600 | 385 | 20 | 45 | 90 | 100 |
| VFD5600CP63A-00/21 | 560 | 745 | 465 | 20 | 45 | 75 | 90 |
| VFD6300CP63A-00/21 | 630 | 850 | 675 | 20 | 45 | 75 | 90 |

※ 690V output motor cable length needs to comply with IEC 60034-25.

Requirements on insulation level of Curve B motor

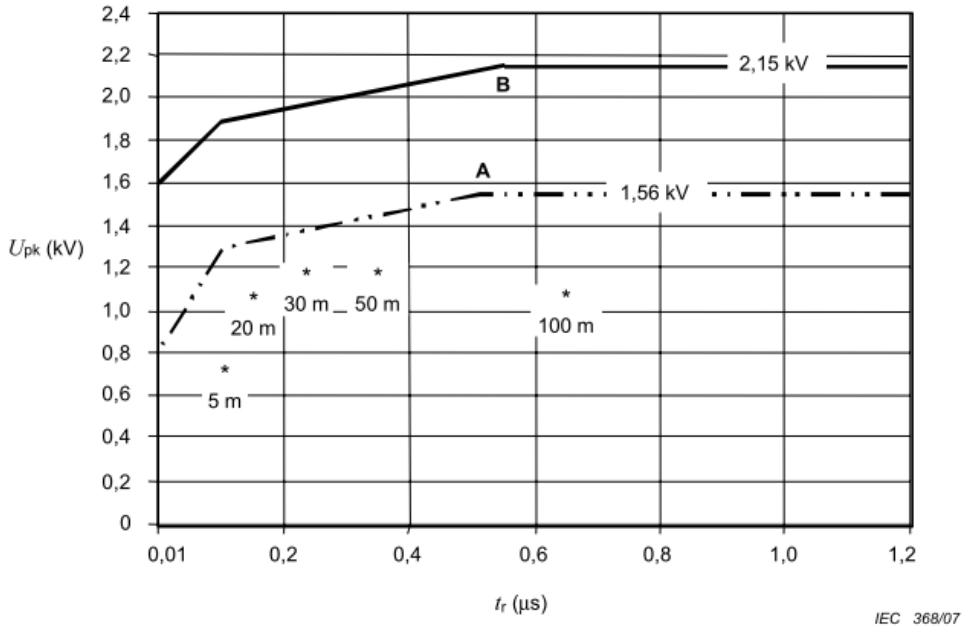


**Key**

A Without filters for motors up to 500 V a.c.

B Without filters for motors up to 690 V a.c.

* Examples of measured results at 415 V supply, for different lengths of steel armoured cable

The $t_r$ is defined as:

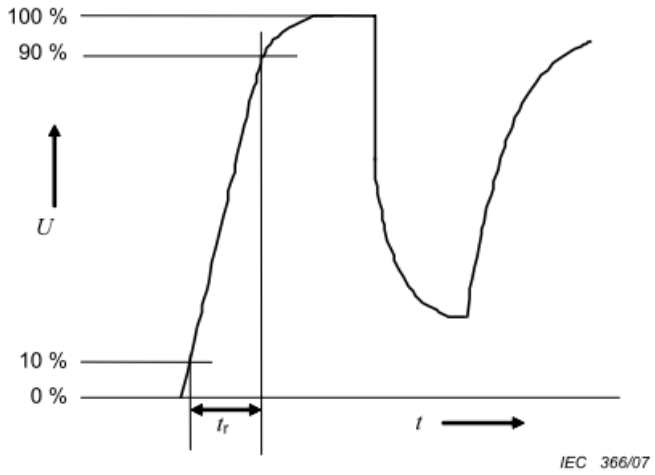

## Sine-wave filter

When there is longer cable length connected between motor drive and motor, the damping will lead to high frequency resonator, and make impedance matching poor to enlarge the voltage reflection. This phenomenon will generate twice input voltage in motor side, which will easily make motor voltage overshoot to damage insulation.

To prevent this phenomenon, installing sine-wave filter can transform PWM output voltage to smooth and low-ripple sin wave, and motor cable length can longer than 1000 meters.

### Installation

Sine-wave filter is serially connected between motor drive UVW output side and motor, which is shown as below:

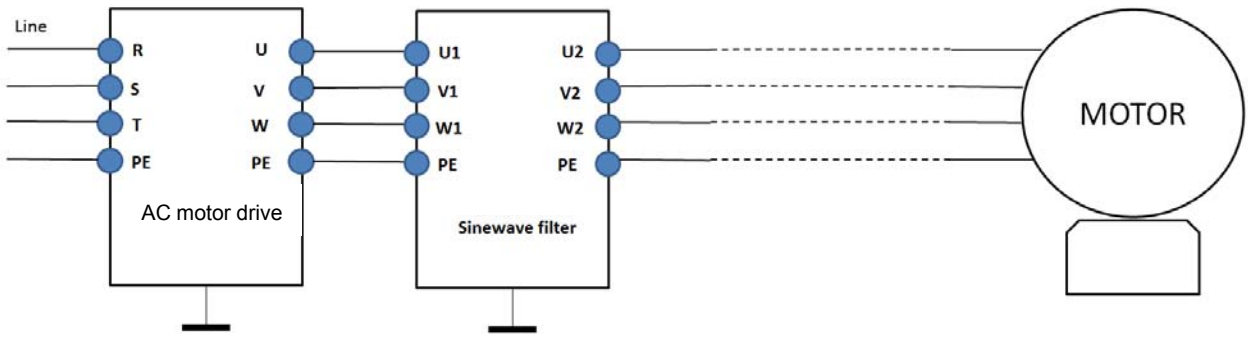


Wiring of non-shielded cable

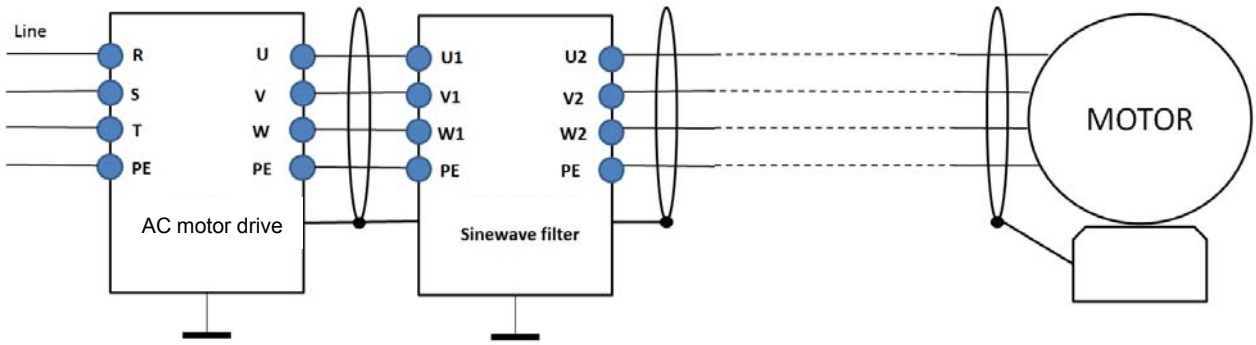


Following table shows the sin-wave filter specification of Delta CP2000

200V~230V / 50~60Hz

| 230V Model | kW | HP | Rated current (Arms) | | Suggested sine-wave filter part # | Output cable length (Shielded or non-shielded) |
|---|---|---|---|---|---|---|
| | | | Normal Duty | Light Duty | | |
| 7 | 0.75 | 1 | 4.6 | 5 | B84143V0006R227 | 1000 |
| 15 | 1.5 | 2 | 5 | 7.5 | B84143V0011R227 | 1000 |
| 22 | 2.2 | 3 | 8 | 10 | B84143V0011R227 | 1000 |
| 37 | 3.7 | 5 | 11 | 15 | B84143V0025R227 | 1000 |

| 230V Model | kW | HP | Rated current (Arms) | | Suggested sine-wave filter part # | Output cable length (Shielded or non-shielded) |
|---|---|---|---|---|---|---|
| | | | Normal Duty | Light Duty | | |
| 55 | 5.5 | 7.5 | 17 | 21 | B84143V0025R227 | 1000 |
| 75 | 7.5 | 10 | 25 | 31 | B84143V0033R227 | 1000 |
| 110 | 11 | 15 | 33 | 46 | B84143V0050R227 | 1000 |
| 150 | 15 | 20 | 49 | 61 | B84143V0066R227 | 1000 |
| 185 | 18.5 | 25 | 65 | 75 | B84143V0075R227 | 1000 |
| 220 | 22 | 30 | 75 | 90 | B84143V0095R227 | 1000 |
| 300 | 30 | 40 | 90 | 105 | B84143V0132R227 | 1000 |
| 370 | 37 | 50 | 120 | 146 | B84143V0180R227 | 1000 |
| 450 | 45 | 60 | 146 | 180 | B84143V0180R227 | 1000 |
| 550 | 55 | 75 | 180 | 215 | B84143V0250R227 | 1000 |
| 750 | 75 | 100 | 215 | 276 | B84143V0320R227 | 1000 |
| 900 | 90 | 125 | 255 | 322 | Non-available | 1000 |

380V~460V / 50~60Hz

| 460V Model | kW | HP | Rated current (Arms) | | Suggested sine-wave filter part # | Output cable length (Shielded or non-shielded) |
|---|---|---|---|---|---|---|
| | | | Normal Duty | Normal Duty | | |
| 007 | 0.75 | 1 | 2.8 | 3 | B84143V0004R227 | 1000 |
| 015 | 1.5 | 2 | 3 | 4.2 | B84143V0006R227 | 1000 |
| 022 | 2.2 | 3 | 4 | 5.5 | B84143V0006R227 | 1000 |
| 037 | 3.7 | 5 | 6 | 8.5 | B84143V0011R227 | 1000 |
| 040 | 4 | 5 | 9 | 10.5 | B84143V0011R227 | 1000 |
| 055 | 5.5 | 7.5 | 10.5 | 13 | B84143V0016R227 | 1000 |
| 075 | 7.5 | 10 | 12 | 18 | B84143V0025R227 | 1000 |
| 110 | 11 | 15 | 18 | 24 | B84143V0025R227 | 1000 |
| 150 | 15 | 20 | 24 | 32 | B84143V0033R227 | 1000 |
| 185 | 18.5 | 25 | 32 | 38 | B84143V0050R227 | 1000 |
| 220 | 22 | 30 | 38 | 45 | B84143V0050R227 | 1000 |
| 300 | 30 | 40 | 45 | 60 | B84143V0066R227 | 1000 |
| 370 | 37 | 50 | 60 | 73 | B84143V0075R227 | 1000 |
| 450 | 45 | 60 | 73 | 91 | B84143V0095R227 | 1000 |
| 550 | 55 | 75 | 91 | 110 | B84143V0132R227 | 1000 |
| 750 | 75 | 100 | 110 | 150 | B84143V0180R227 | 1000 |
| 900 | 90 | 125 | 150 | 180 | B84143V0180R227 | 1000 |
| 1100 | 110 | 150 | 180 | 220 | B84143V0250R227 | 1000 |
| 1320 | 132 | 175 | 220 | 260 | B84143V0320R227 | 1000 |
| 1600 | 160 | 215 | 260 | 310 | B84143V0320R227 | 1000 |
| 1850 | 185 | 250 | 310 | 370 | Non-available | 1000 |
| 2200 | 220 | 300 | 370 | 460 | Non-available | 1000 |
| 2800 | 280 | 375 | 460 | 530 | Non-available | 1000 |
| 3150 | 315 | 420 | 550 | 616 | Non-available | 1000 |
| 3550 | 355 | 475 | 616 | 683 | Non-available | 1000 |

| 460V Model | kW | HP | Rated current (Arms) | | Suggested sine-wave filter part # | Output cable length (Shielded or non-shielded) |
|---|---|---|---|---|---|---|
| | | | Normal Duty | Normal Duty | | |
| 4000 | 400 | 536 | 683 | 770 | Non-available | 1000 |
| 5000 | 500 | 675 | 866 | 912 | Non-available | 1000 |

| Sine-wave output filters | Click on this URL for more information http://en.tdk.eu/inf/30/db/emc_2014/B84143V_R227.pdf |
|---|---|
| B84143V0004R227 | $I_R$:4A, Sine-wave output filters for 3-phase systems |
| B84143V0006R227 | $I_R$:6A, Sine-wave output filters for 3-phase systems |
| B84143V0011R227 | $I_R$:11A, Sine-wave output filters for 3-phase systems |
| B84143V0016R227 | $I_R$:16A, Sine-wave output filters for 3-phase systems |
| B84143V0025R227 | $I_R$:25A, Sine-wave output filters for 3-phase systems |
| B84143V0033R227 | $I_R$:33A, Sine-wave output filters for 3-phase systems |
| B84143V0050R227 | $I_R$:50A, Sine-wave output filters for 3-phase systems |
| B84143V0066R227 | $I_R$:66A, Sine-wave output filters for 3-phase systems |
| B84143V0075R227 | $I_R$:75A, Sine-wave output filters for 3-phase systems |
| B84143V0095R227 | $I_R$:95A, Sine-wave output filters for 3-phase systems |
| B84143V0132R227 | $I_R$:132A, Sine-wave output filters for 3-phase systems |
| B84143V0180R227 | $I_R$:180A, Sine-wave output filters for 3-phase systems |
| B84143V0250R227 | $I_R$:250A, Sine-wave output filters for 3-phase systems |
| B84143V0320R227 | $I_R$:320A, Sine-wave output filters for 3-phase systems |

# 7-5 Zero Phase Reactors

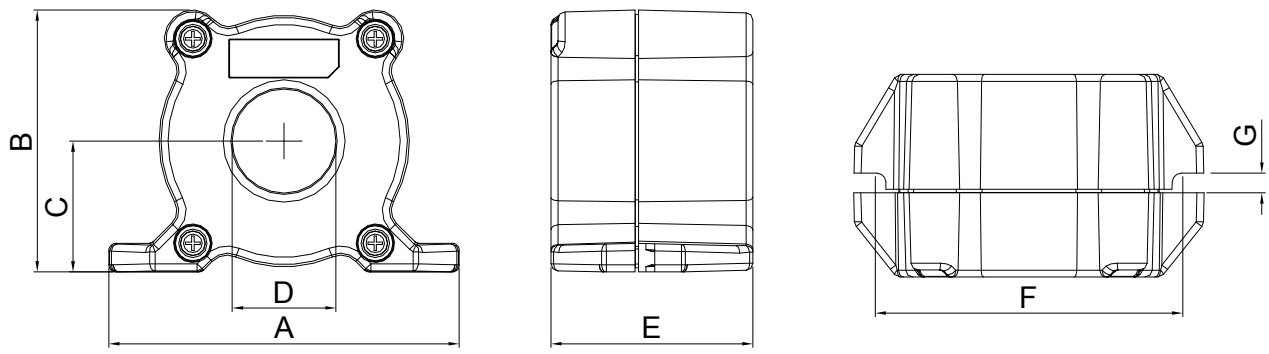


UNIT: mm (inch)

| model | A | B | C | D | E | F | G(Ø) | Torque |
|---|---|---|---|---|---|---|---|---|
| RF008X00A | 98 (3.858) | 73 (2.874) | 36.5 (1.437) | 29 (1.142) | 56.5 (2.224) | 86 (3.386) | 5.5 (0.217) | < 10kgf/cm$^2$ |
| RF004X00A | 110 (4.331) | 87.5 (3.445) | 43.5 (1.713) | 36 (1.417) | 53 (2.087) | 96 (3.780) | 5.5 (0.217) | < 10kgf/cm$^2$ |

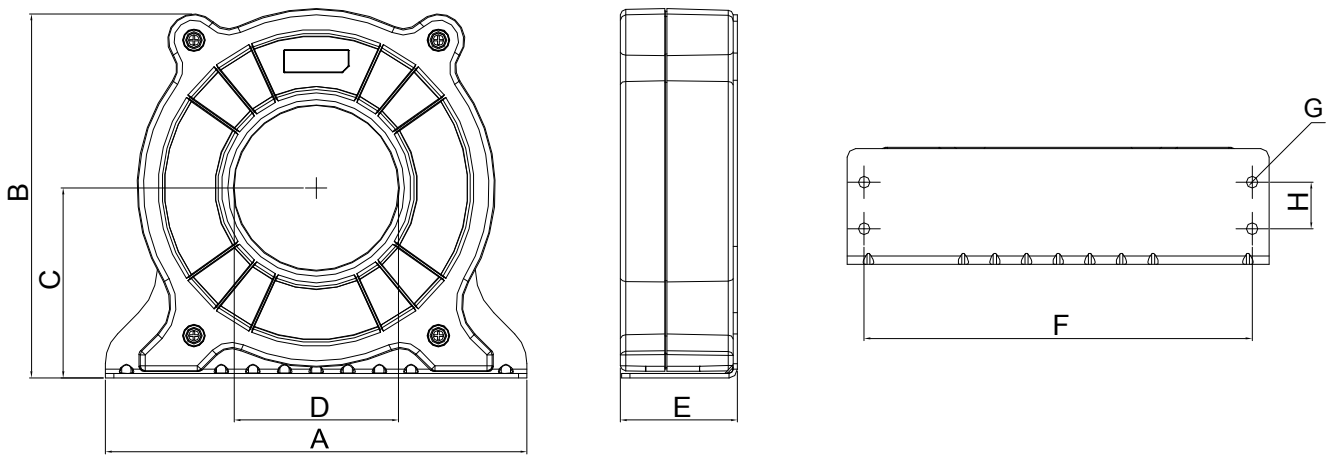


UNIT: mm (inch)

| model | A | B | C | D | E | F | G(Ø) | H | Torque |
|---|---|---|---|---|---|---|---|---|---|
| RF002X00A | 200 (7.874) | 172.5 (6.791) | 90 (3.543) | 78 (3.071) | 55.5 (2.185) | 184 (7.244) | 5.5 (0.217) | 22 (0.866) | <45kgf/cm$^2$ |

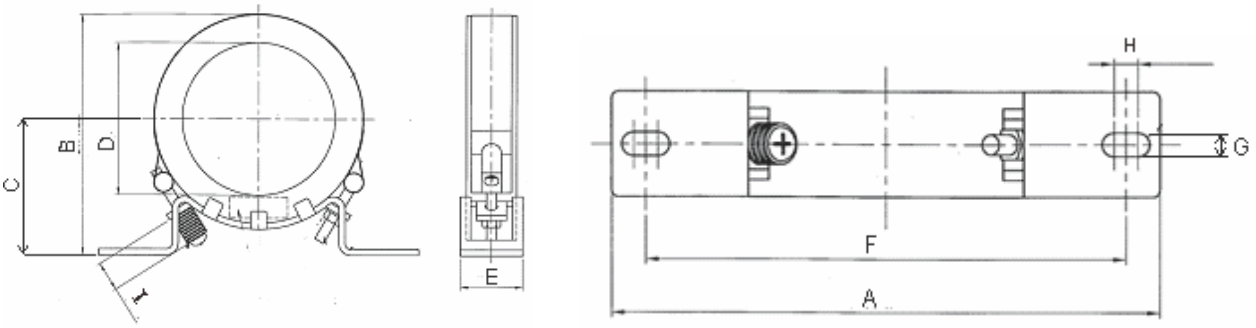


UNIT: mm (inch)

| model | A | B | C | D | E | F | G(Ø) | H | I |
|---|---|---|---|---|---|---|---|---|---|
| RF300X00A | 241(9.488) | 217(8.543) | 114(4.488) | 155(6.102) | 42(1.654) | 220(8.661) | 6.5(0.256) | 7.0(0.276) | 20(0.787) |

| Reactor model (Note) | Recommended Wire Size | | Wiring Method | Qty | Corresponding motor drives |
|---|---|---|---|---|---|
| RF008X00A | ≤ 8 AWG | ≤ 8.37 $mm^2$ | Diagram A | 1 | VFD007CP23A-21; VFD007CP43A/4EA-21; VFD015CP23A-21; VFD015CP43B/4EB-21; VFD022CP23A-21;VFD022CP43B/4EB-21; VFD037CP23A-21; VFD037CP43B/4EB-21; VFD040CP43A/4EA-21; VFD055CP23A-21; VFD055CP43B/4EB-21; VFD075CP43B/4EB-21; VFD022CP53A-21; VFD037CP53A-21; |
| RF004X00A | ≤ 4 AWG | ≤ 21.15 $mm^2$ | Diagram A | 1 | VFD075CP23A-21; VFD110CP23A-21; VFD110CP43B/4EB -21; VFD150CP23A-21; VFD150CP43B/4EB -21; VFD185CP43B/4EB -21; VFD055CP53A-21; VFD075CP53A-21; VFD110CP53A-21; VFD150CP53A-21; |
| RF002X00A | ≤ 2 AWG | ≤ 33.62 $mm^2$ | Diagram A | 1 | VFD185CP23A-21; VFD220CP23A-21; VFD220CP43A/4EA -21; VFD300CP23A-21; VFD300CP43B/4EB -21; VFD370CP43B/4EB -21; VFD185CP63A-21; VFD220CP63A-21; VFD300CP63A-21; VFD370CP63A-21; VFD370CP23A-00/23A-21; VFD450CP23A-00/23A-21; VFD750CP43B-00/43B-21; VFD900CP43A-00/43A-21; VFD450CP63A-00; VFD550CP63A-00; VFD450CP63A-21; VFD550CP63A-21; |
| RF300X00A | ≤ 300 MCM | ≤ 152 $mm^2$ | Diagram A | 1 | VFD450CP43S-00; VFD550CP43S-00; VFD450CP43S-21; VFD550CP43S-21; VFD550CP23A-00/23A-21; VFD750CP23A-00/23A-21; VFD900CP23A-00/23A-21; VFD1100CP43A-00/43A-21; VFD1320CP43B-00/43B-21; VFD750CP63A-00; VFD900CP63A-00; VFD1100CP63A-00; VFD1320CP63A-00; VFD750CP63A-21; VFD900CP63A-21; VFD1100CP63A-21; VFD1320CP63A-21; VFD1600CP43A-00/43A-21; VFD1850CP43B-00/43B-21; VFD1600CP63A-00; VFD2000CP63A-00; VFD1600CP63A-21; VFD2000CP63A-21; VFD2200CP43A-00/43A-21; VFD2800CP43A-00/43A-21; VFD2500CP63A-00; VFD3150CP63A-00; VFD2500CP63A-21; VFD3150CP63A-21; VFD3150CP43A-00/43C-00/43C-21; VFD3550CP43A-00/43C-00/43C-21; VFD4000CP43A-00/43C-00/43C-21; VFD4000CP63A-00; VFD4500CP63A-00; VFD5600CP63A-00; VFD6300CP63A-00; VFD4000CP63A-21; VFD4500CP63A-21; VFD5600CP63A-21; VFD6300CP63A-21; |

*575V insulated power cable

Diagram A

Please put all wires through at least one core without winding.

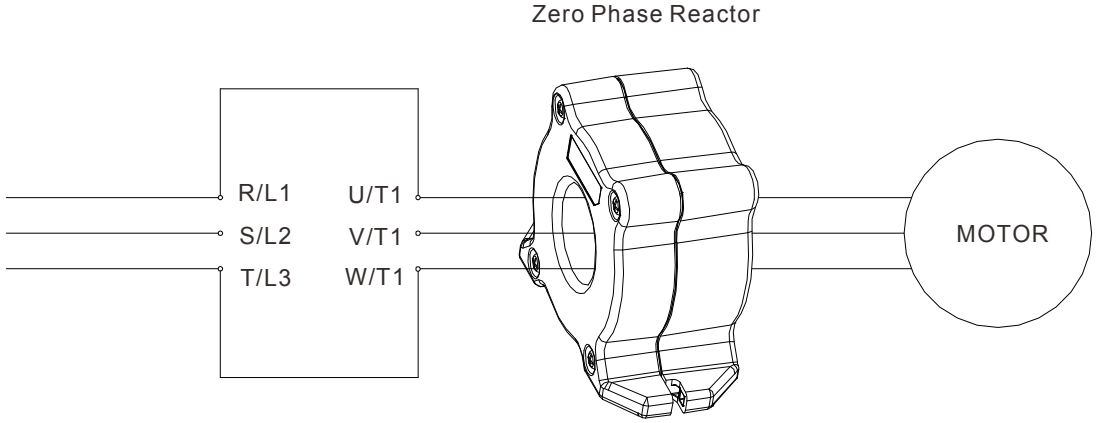


**Note 1:** The table above gives approximate wire size for the zero phase reactors but the selection is ultimately governed by the type and diameter of cable fitted i.e. the cable must fit through the center hole of zero phase reactors.

**Note 2:** Only the phase conductors should pass through, not the earth core or screen.

**Note 3:** When long motor output cables are used an output zero phase reactor may be required to reduce radiated emissions from the cable.

## 7-6 EMC Filter

The following table shows external EMC filter models for each CP2000 series AC motor drive. Users can choose corresponding zero phase reactor and applicable shielding cable according to required noise emission and electromagnetic disturbance rating, to make the best assembly and restrain electromagnetic disturbance. If radiation emission (RE) is ignored, and only needs conducted emission (CE) to reach Class C2 or C1 on site, zero phase reactor does not need to add at input side, and it can reach the standard of EMC.

| Model | Input Current (A) | Applicable EMC Filter | Zero Phase* Reactor (See statements below the table) | CE Cable Length | | Radiation Emission |
|---|---|---|---|---|---|---|
| | | | | default carrier frequency | | |
| | | | | EN61800-3 C1 | EN61800-3 C2 | EN61800-3 C2 |
| VFD007CP23A | 6.4 | EMF021A23A | RF008X00A | 50m | 100m | Pass |
| VFD015CP23A | 9.6 | | | 50m | 100m | Pass |
| VFD022CP23A | 15 | | | 50m | 100m | Pass |
| VFD037CP23A | 22 | | | 50m | 100m | Pass |
| VFD055CP23A | 25 | EMF056A23A | | 50m | 100m | Pass |
| VFD075CP23A | 35 | | RF004X00A | 50m | 100m | Pass |
| VFD110CP23A | 50 | | | 50m | 100m | Pass |
| VFD150CP23A | 65 | KMF3100A | | 50m | 100m | Pass |
| VFD185CP23A | 83 | | RF002X00A | 50m | 100m | Pass |
| VFD220CP23A | 100 | | | 50m | 100m | Pass |
| VFD300CP23A | 116 | B84143D0150R127 | | 50m | 100m | Pass |
| VFD370CP23A | 146 | | | 50m | 100m | Pass |
| VFD450CP23A | 180 | B84143B0250S020 | | 50m | 100m | Pass |
| VFD550CP23A | 215 | | RF300X00A | 50m | 100m | Pass |
| VFD750CP23A | 276 | B84143B0400S020 | | 50m | 100m | Pass |
| VFD900CP23A | 322 | | | 50m | 100m | Pass |
| VFD007CP43A | 4.3 | EMF014A43A | RF008X00A | 50m | 100m | Pass |
| VFD015CP43B | 6 | | | 50m | 100m | Pass |
| VFD022CP43B | 8.1 | | | 50m | 100m | Pass |
| VFD037CP43B | 12.4 | | | 50m | 100m | Pass |
| VFD040CP43A | 16 | EMF039A43A | | 50m | 100m | Pass |
| VFD055CP43B | 20 | | | 50m | 100m | Pass |
| VFD075CP43B | 22 | | | 50m | 100m | Pass |
| VFD110CP43B | 26 | | RF004X00A | 50m | 100m | Pass |
| VFD150CP43B | 35 | | | 50m | 100m | Pass |
| VFD185CP43B | 42 | KMF370A | | 50m | 100m | Pass |
| VFD220CP43A | 50 | | RF002X00A | 50m | 100m | Pass |
| VFD300CP43B | 66 | | | 50m | 100m | Pass |
| VFD370CP43B | 80 | B84143D0150R127 | | 50m | 100m | Pass |
| VFD450CP43S | 91 | | | 50m | 100m | Pass |
| VFD550CP43S | 110 | | | 50m | 100m | Pass |

| Model | Input Current (A) | Applicable EMC Filter | Zero Phase* Reactor (See statements below the table) | CE Cable Length | | Radiation Emission |
|---|---|---|---|---|---|---|
| | | | | default carrier frequency | | |
| | | | | EN61800-3 C1 | EN61800-3 C2 | EN61800-3 C2 |
| VFD750CP43B | 150 | B84143D0150R127 | RF002X00A | 50m | 100m | Pass |
| VFD900CP43A | 180 | B84143D0200R127 | RF002X00A | 50m | 100m | Pass |
| VFD1100CP43A | 220 | | RF300X00A | 50m | 100m | Pass |
| VFD1320CP43B | 260 | MIF3400B | | 50m | 100m | Pass |
| VFD1600CP43A | 310 | | | 50m | 100m | Pass |
| VFD1850CP43B | 370 | | | 50m | 100m | Pass |
| VFD2200CP43A | 460 | MIF3800 | | 50m | 100m | Pass |
| VFD2800CP43A | 530 | | | 50m | 100m | Pass |
| VFD3150CP43A | 616 | | | 50m | 100m | Pass |
| VFD3550CP43A | 683 | | | 50m | 100m | Pass |
| VFD4000CP43A | 770 | | | 50m | 100m | Pass |
| VFD022CP53A-21 | 5.4 | EMF008A63A | RF008X00A | 50m | 100m | Pass |
| VFD037CP53A-21 | 10.4 | EMF014A63A | | 50m | 100m | Pass |
| VFD055CP53A-21 | 14.9 | EMF027A63A | | 50m | 100m | Pass |
| VFD075CP53A-21 | 16.9 | | | 50m | 100m | Pass |
| VFD110CP53A-21 | 21.3 | | | 50m | 100m | Pass |
| VFD150CP53A-21 | 26.3 | | | 50m | 100m | Pass |
| VFD185CP63A-21 | 29 | B84143A0050R021 | RF002X00A | 50m | 100m | Pass |
| VFD220CP63A-21 | 36 | | | 50m | 100m | Pass |
| VFD300CP63A-21 | 43 | | | 50m | 100m | Pass |
| VFD370CP63A-21 | 54 | | | 50m | 100m | Pass |
| VFD450CP63A-00<br>VFD450CP63A-21 | 54 | | | 50m | 100m | Pass |
| VFD550CP63A-00<br>VFD550CP63A-21 | 67 | | | 50m | 100m | Pass |
| VFD750CP63A-00<br>VFD750CP63A-21 | 84 | B84143A0120R021 | RF300X00A | 50m | 100m | Pass |
| VFD900CP63A-00<br>VFD900CP63A-21 | 102 | | | 50m | 100m | Pass |
| VFD1100CP63A-00<br>VFD1100CP63A-21 | 122 | B84143B0150S021 | | 50m | 100m | Pass |
| VFD1320CP63A-00<br>VFD1320CP63A-21 | 147 | | | 50m | 100m | Pass |
| VFD1600CP63A-00<br>VFD1600CP63A-21 | 178 | B84143B0250S021 | | 50m | 100m | Pass |
| VFD2000CP63A-00<br>VFD2000CP63A-21 | 217 | | | 50m | 100m | Pass |
| VFD2500CP63A-00<br>VFD2500CP63A-21 | 292 | B84143B0400S021 | | 50m | 100m | Pass |
| VFD3150CP63A-00<br>VFD3150CP63A-21 | 353 | | | 50m | 100m | Pass |
| VFD4000CP63A-00<br>VFD4000CP63A-21 | 454 | B84143B0600S021 | | 50m | 100m | Pass |
| VFD4500CP63A-00<br>VFD4500CP63A-21 | 469 | | | 50m | 100m | Pass |
| VFD5600CP63A-00<br>VFD5600CP63A-21 | 595 | | | 50m | 100m | Pass |

| Model | Input Current (A) | Applicable EMC Filter | Zero Phase* Reactor (See statements below the table) | CE Cable Length | | Radiation Emission |
|---|---|---|---|---|---|---|
| | | | | default carrier frequency | | |
| | | | | EN61800-3 C1 | EN61800-3 C2 | EN61800-3 C2 |
| VFD6300CP63A-00<br>VFD6300CP63A-21 | 681 | B84143B0600S021 | RF300X00A | 50m | 100m | Pass |

*For models of Frame A~C: On both input and output side, a zero phase reactor is required to be wired to the motor drive. There should be in total 2 zero phase reactors.
For models of Frame D~H: Only 1 zero phase reactor is required to be wired on the output side of the motor drive.

EMC Filter Dimension

EMC filter model name: EMF021A23A; EMF014A43A

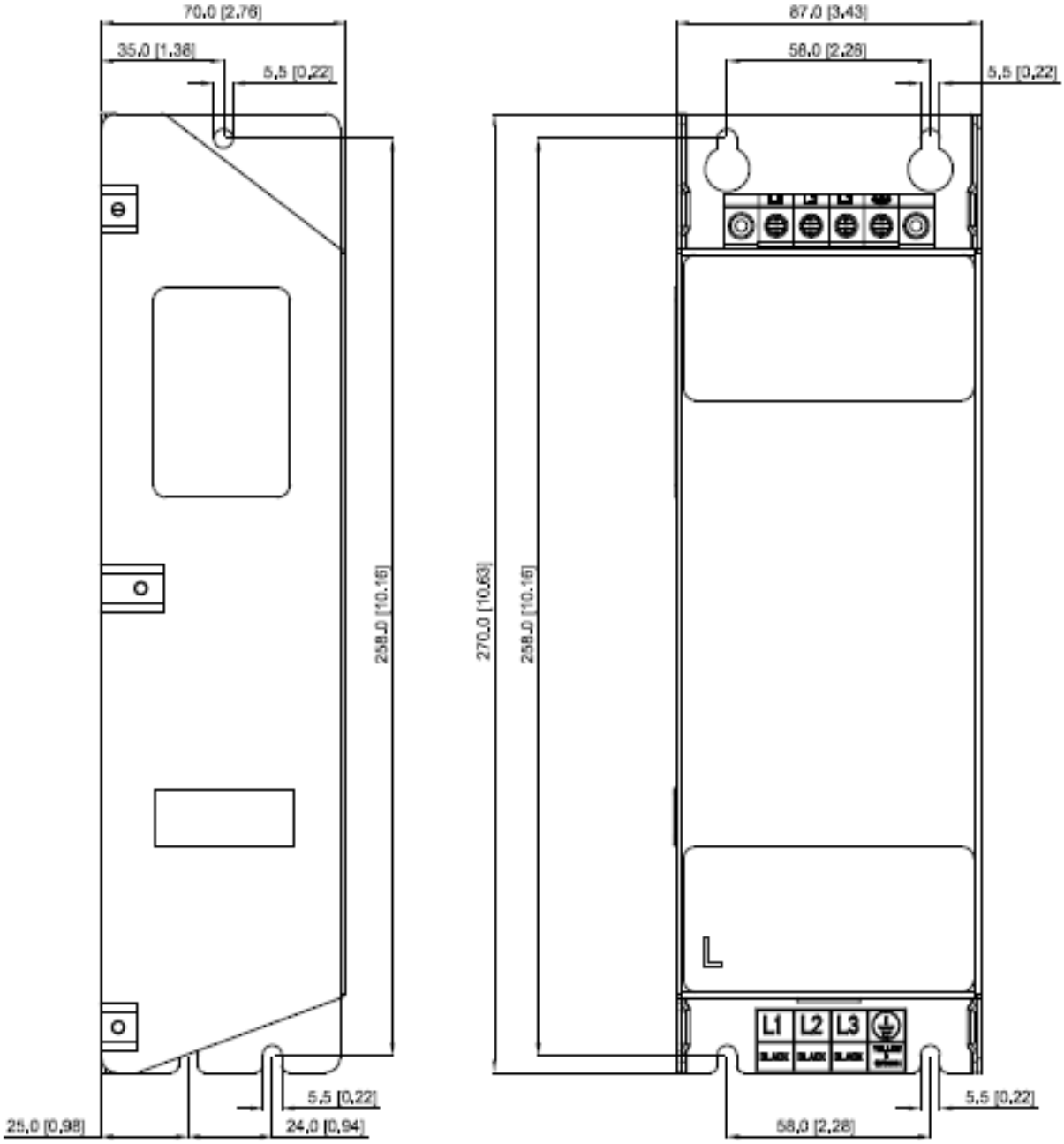


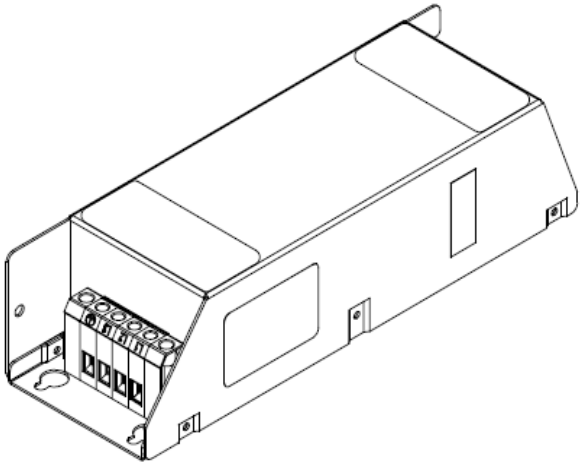

EMC filter model name: EMF018A43A

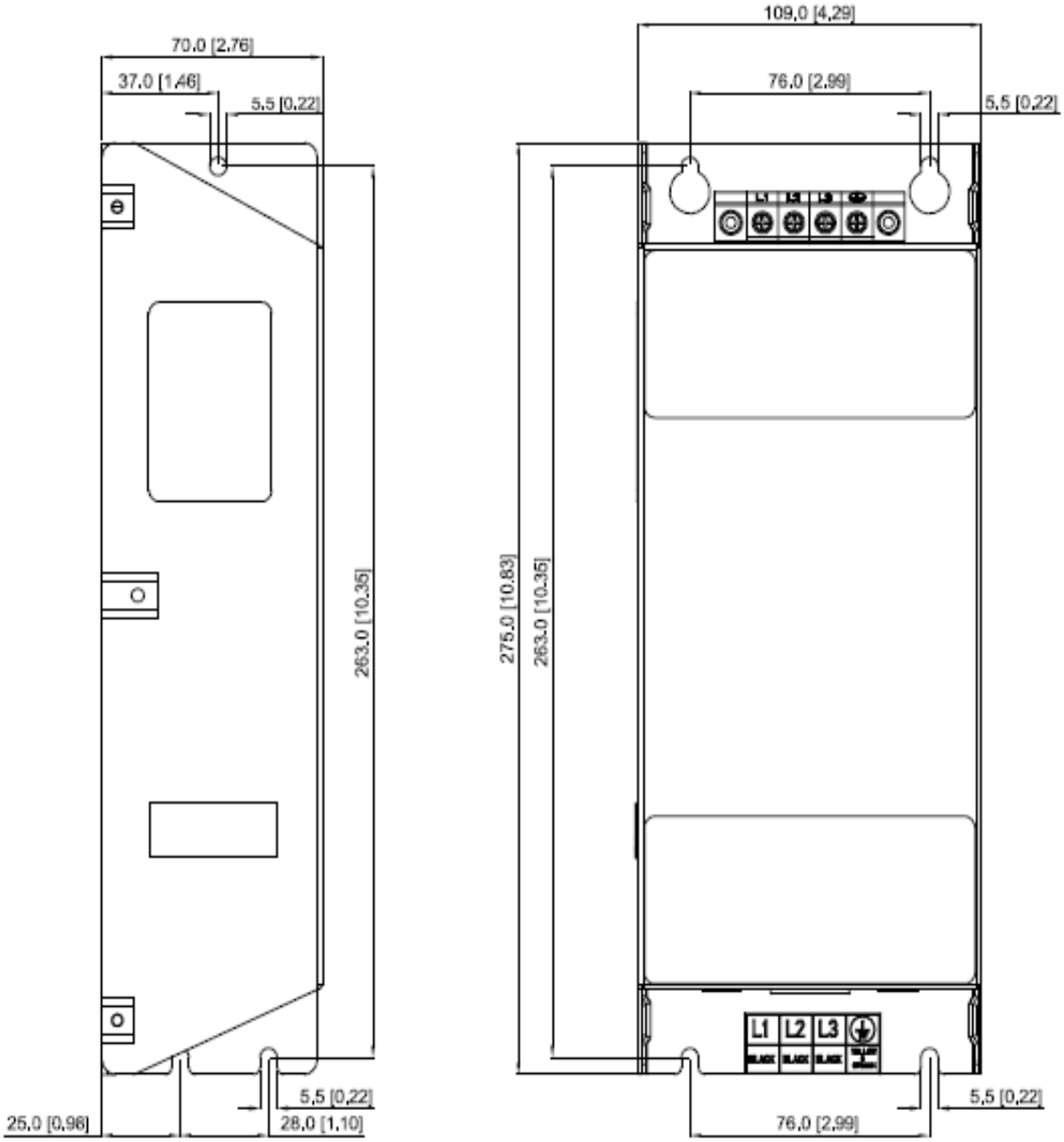

EMC filter model name: EMF056A23A; EMF039A43A

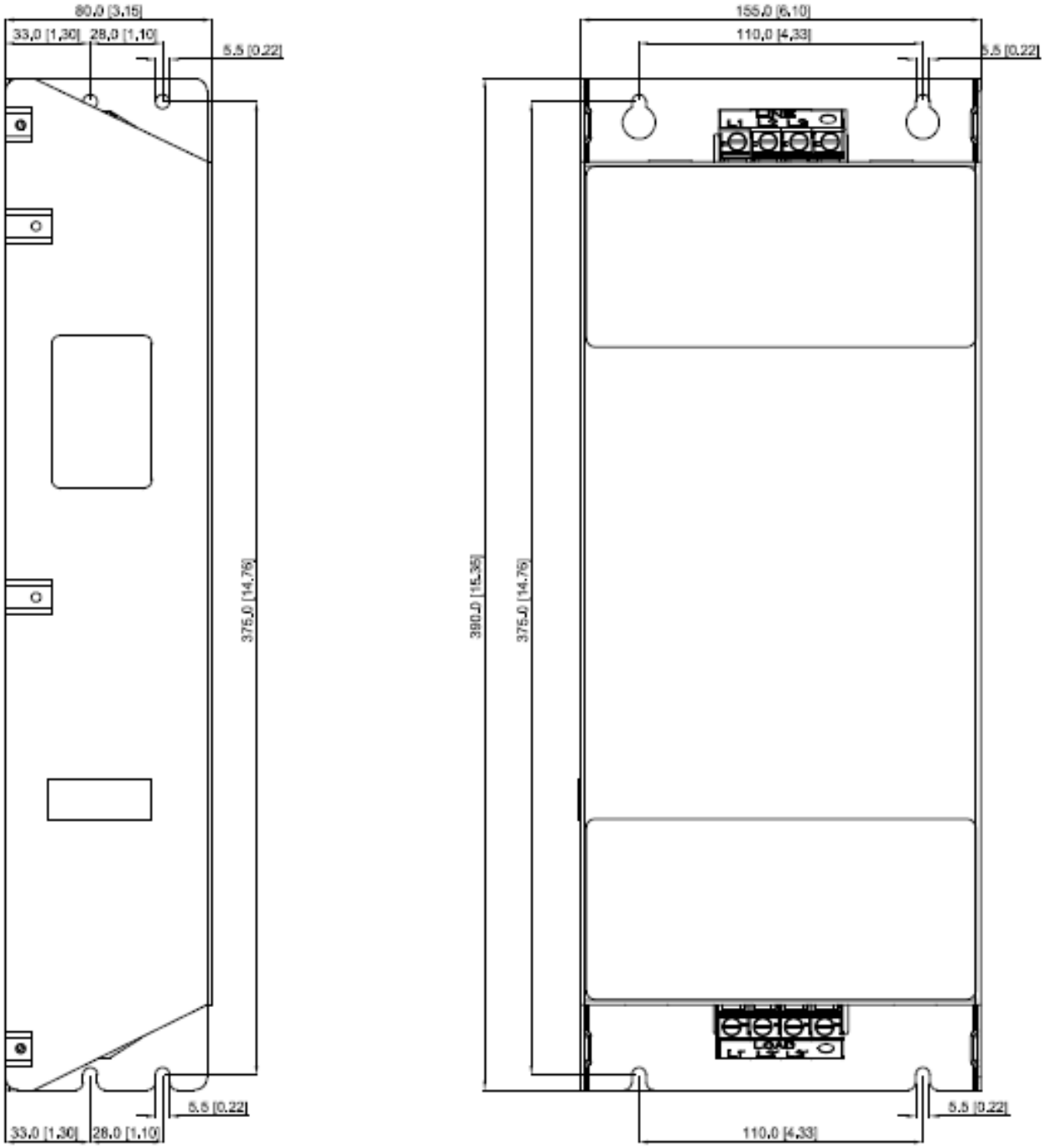


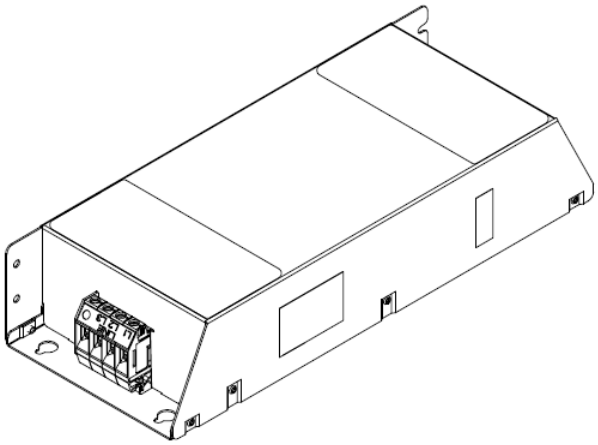

EMC filter model name: KMF370A; KMF3100A

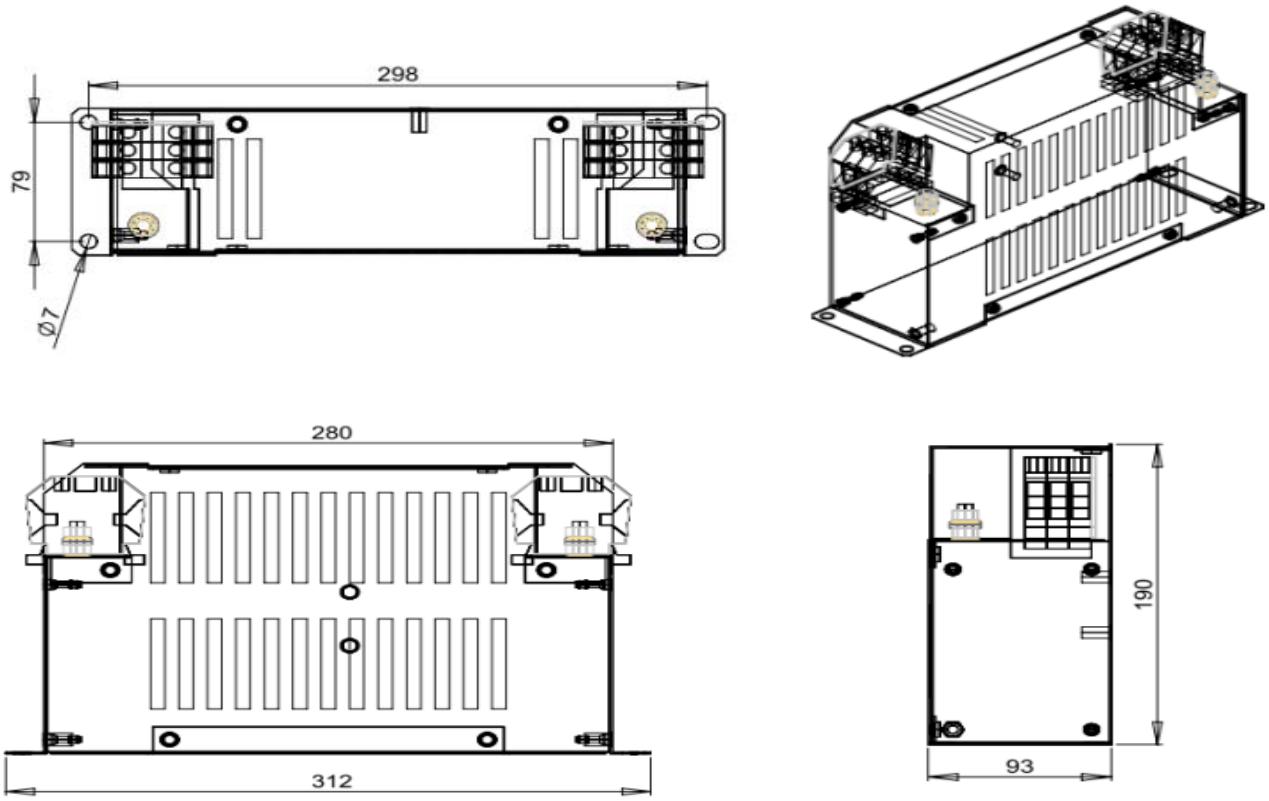


EMC filter model name: B84143D0150R127

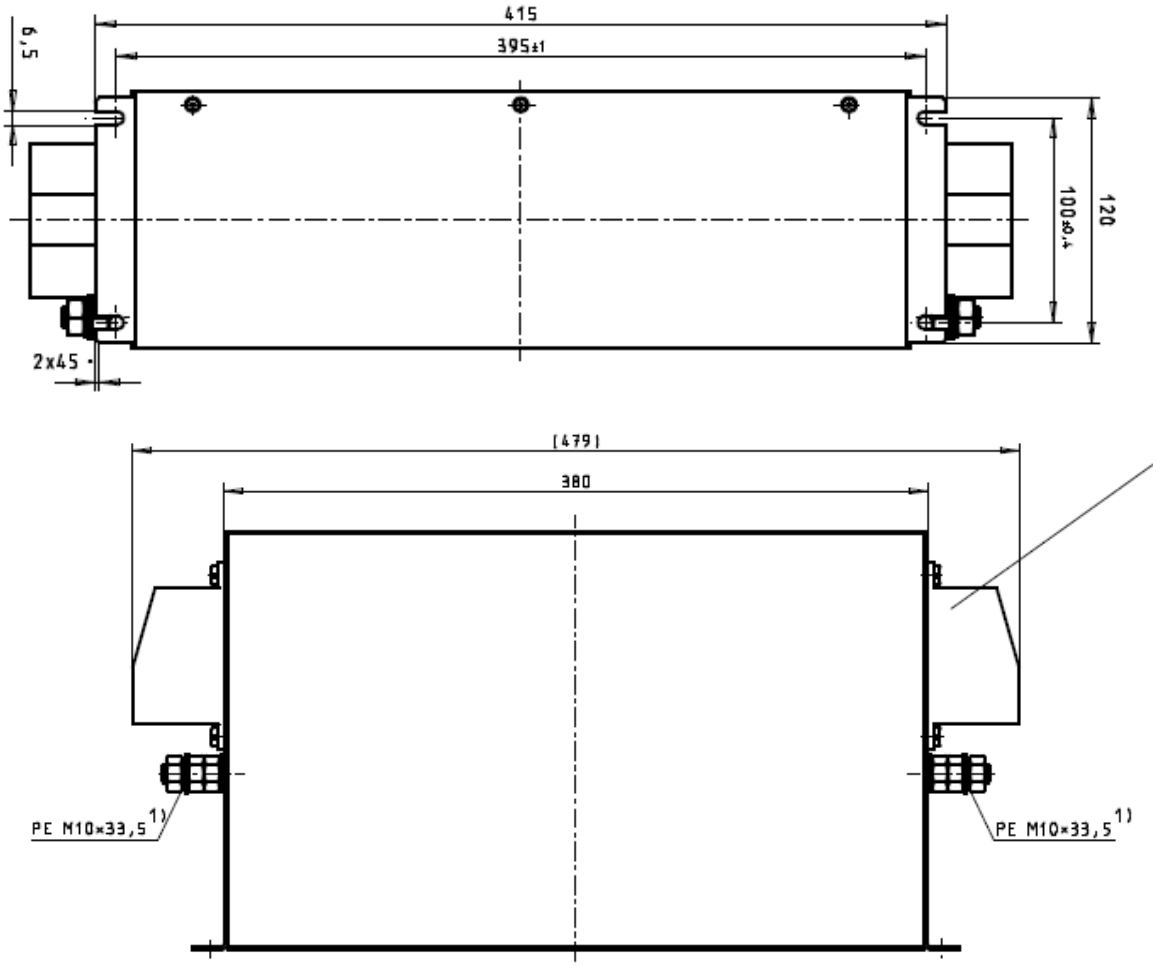

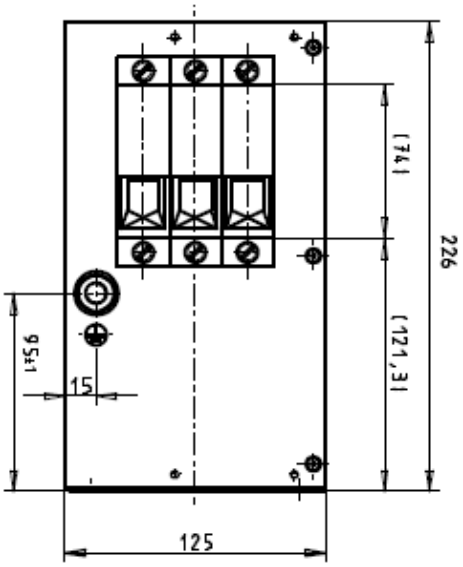


EMC filter model name: B84143D0200R127

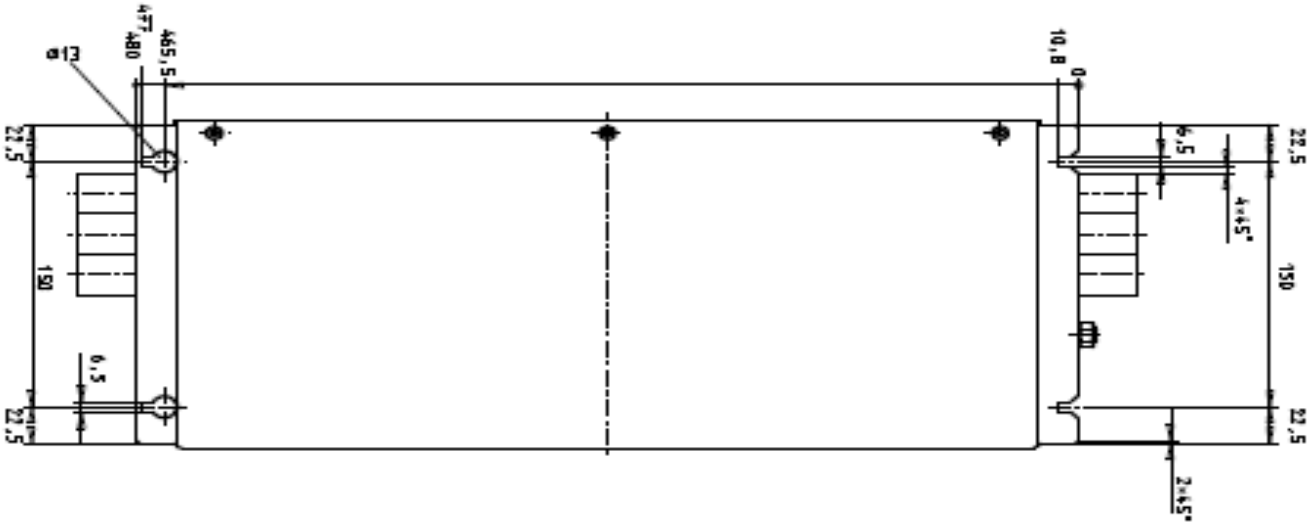


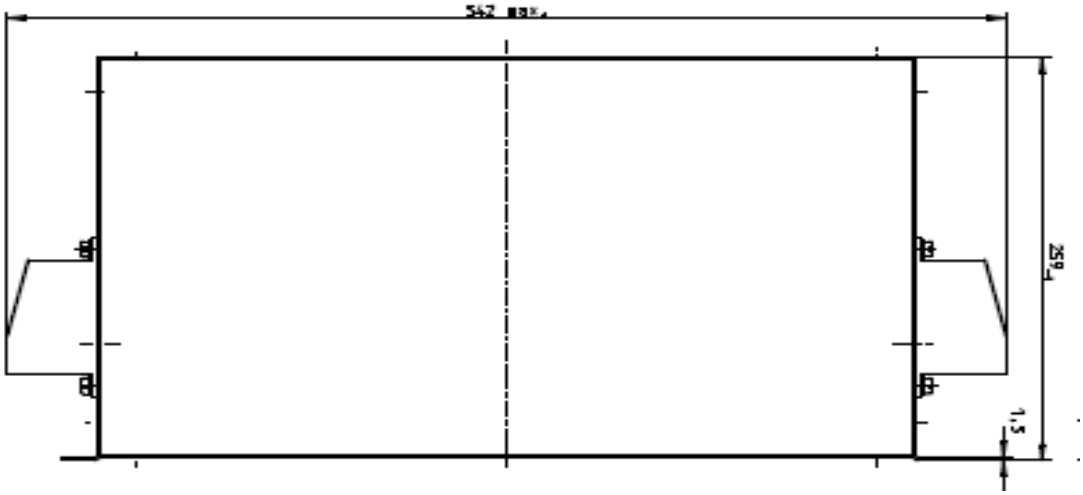

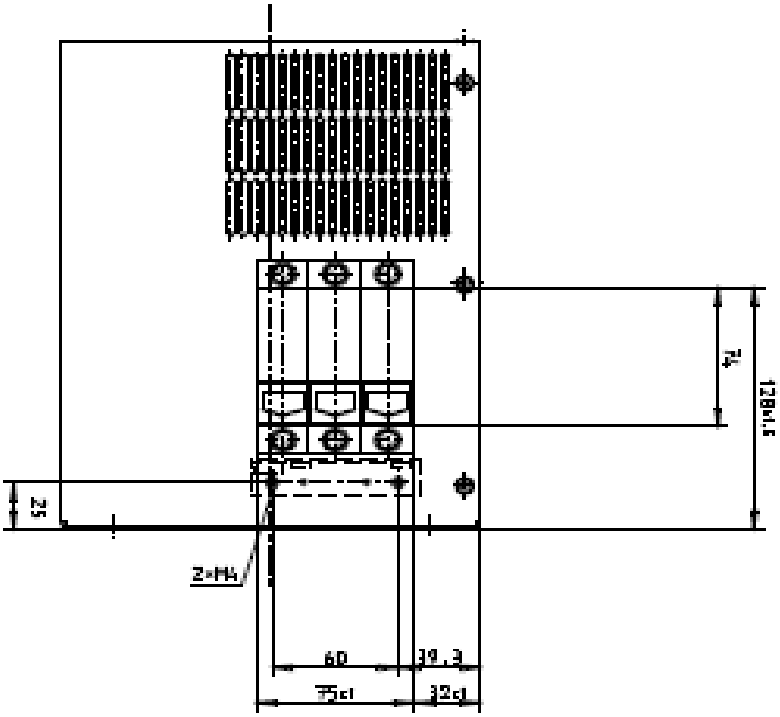


EMC filter model name: B84143B0250S020

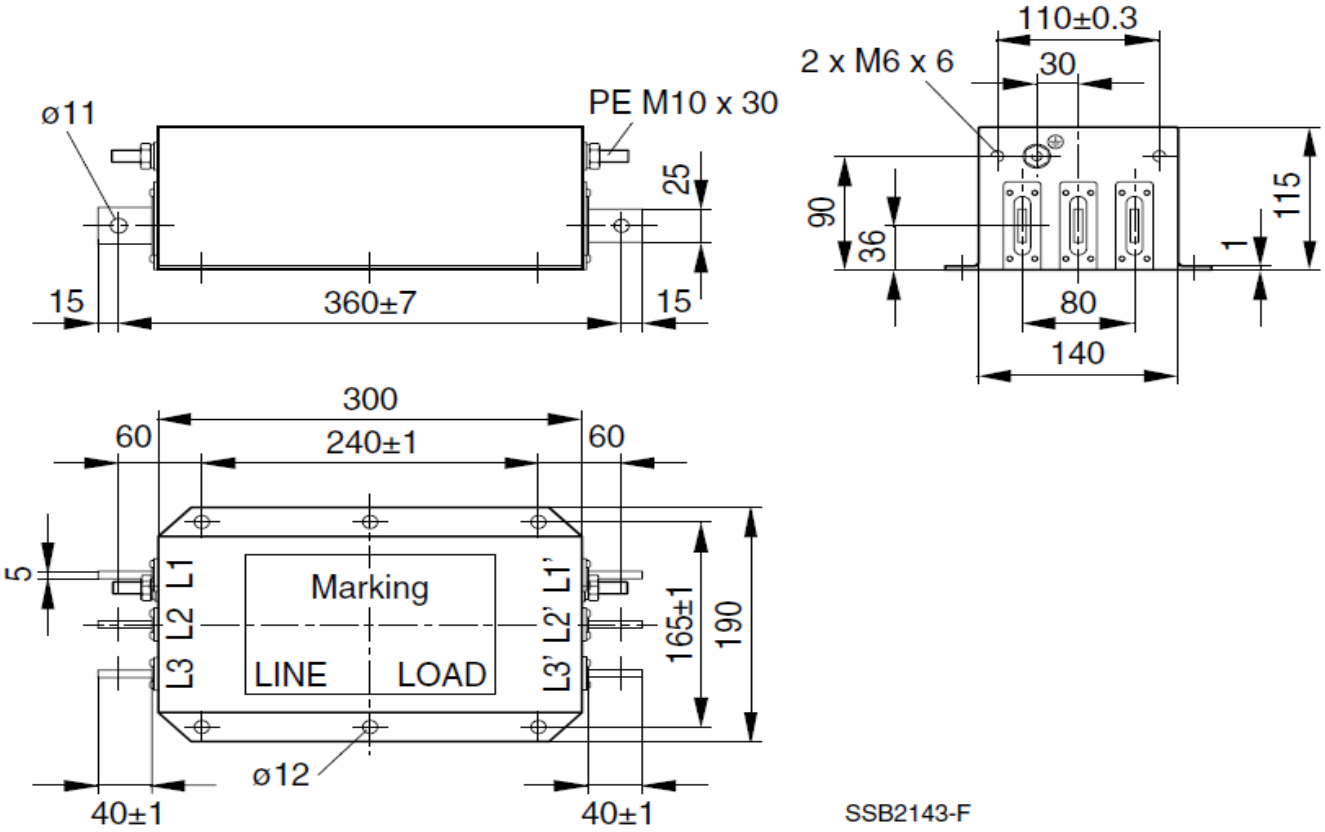

EMC filter model name: B84143B0400S020

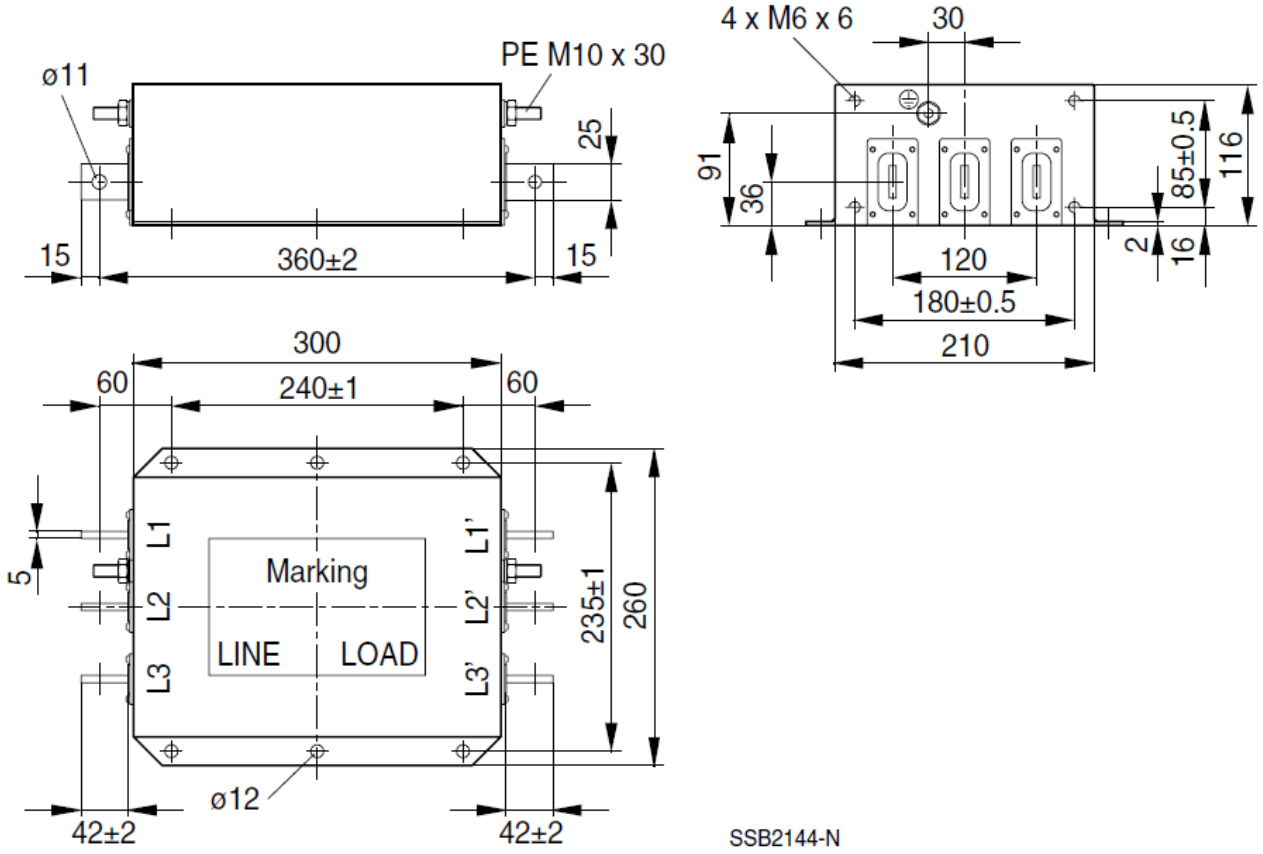


EMC filter model name: B84143B1000S020

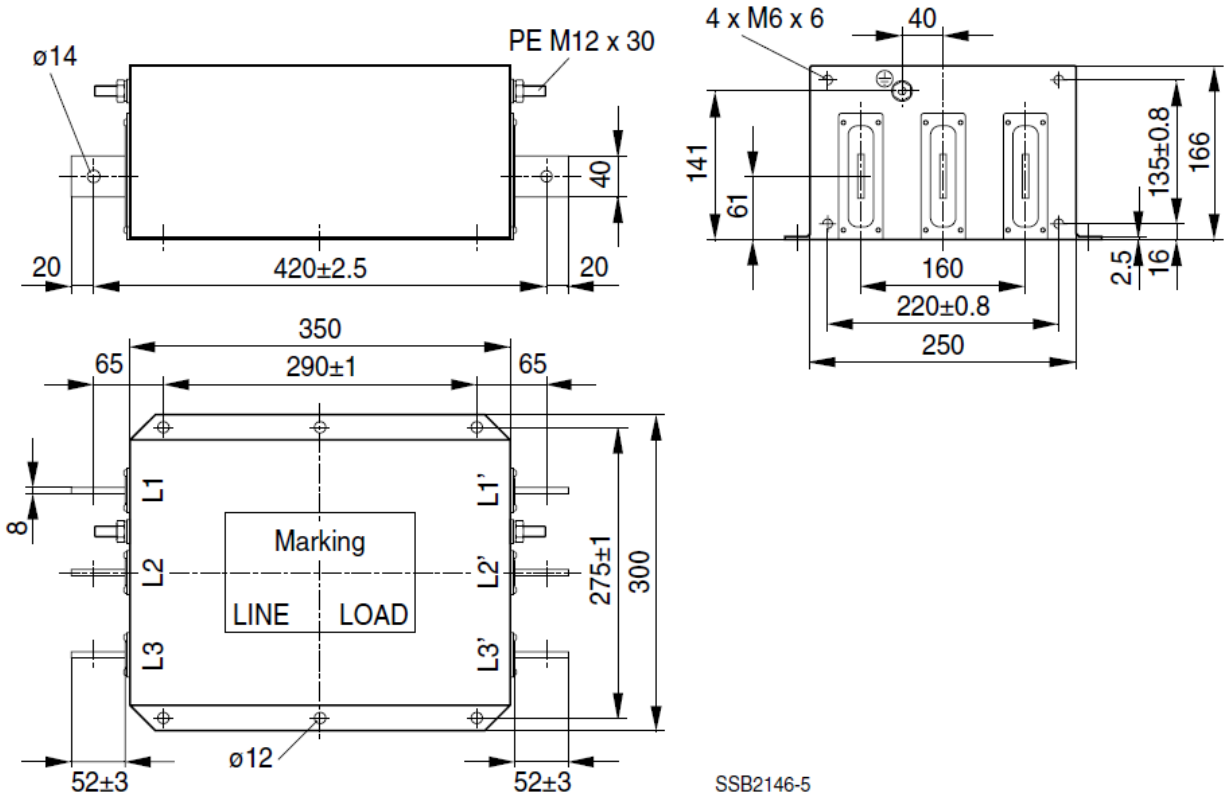

Following table is the suggested shielded cable length of EMC built-in models. User can choose corresponding shielded cable length in accord to required noise emission and electromagnetic interference level.

<table>
<tr><th colspan="2">EMC built-in model</th><th rowspan="2">Rated current (ND)</th><th colspan="2">Comply with EMC (IEC 61800-3) Class C3</th><th colspan="2">Comply with EMC (IEC 61800-3) Class C2</th></tr>
<tr><th>Frame</th><th>Model</th><th>Shielded cable length</th><th>Fc</th><th>Shielded cable length</th><th>Fc</th></tr>
<tr><td rowspan="6">A</td><td>VFD007CP4EA-21</td><td>3.5</td><td rowspan="9">30m</td><td rowspan="6">≤ 8kHz</td><td rowspan="9">10m</td><td rowspan="6">≤ 8kHz</td></tr>
<tr><td>VFD015CP4EB-21</td><td>4.3</td></tr>
<tr><td>VFD022CP4EB-21</td><td>5.9</td></tr>
<tr><td>VFD037CP4EB-21</td><td>8.7</td></tr>
<tr><td>VFD040CP4EA-21</td><td>14</td></tr>
<tr><td>VFD055CP4EB-21</td><td>15.5</td></tr>
<tr><td rowspan="3">B</td><td>VFD075CP4EB-21</td><td>17</td></tr>
<tr><td>VFD110CP4EB -21</td><td>20</td></tr>
<tr><td>VFD150CP4EB -21</td><td>26</td></tr>
<tr><td rowspan="3">C</td><td>VFD185CP4EB -21</td><td>35</td><td rowspan="3">≤ 6kHz</td><td rowspan="3">≤ 6kHz</td></tr>
<tr><td>VFD220CP4EA -21</td><td>40</td></tr>
<tr><td>VFD300CP4EB -21</td><td>47</td></tr>
</table>

* Shielded cable length of Frame A should not longer than 30m and Frame B, C not longer than 50m to prevent cable length from being too long, which may cause built-in EMC filter malfunction due to overheat resulting from leakage current and larger wires parasitic capacitance.

## EMC Filter Installation

All electrical equipment, including AC motor drives, will generate high-frequency/low-frequency noise and will interfere with peripheral equipment by radiation or conduction when in operation. By using an EMC filter with correct installation, much interference can be eliminated. It is recommended to use DELTA EMC filter to have the best interference elimination performance.

We assure that it can comply with following rules when AC motor drive and EMC filter are installed and wired according to user manual:

- **EN61000-6-4**
- **EN61800-3: 1996**
- **EN55011 (1991) Class A Group 1 (1st Environment, restricted distribution)**

**General precaution**

1. EMC filter and AC motor drive should be installed on the same metal plate.
2. Please install AC motor drive on footprint EMC filter or install EMC filter as close as possible to the AC motor drive.
3. Please wire as short as possible.
4. Metal plate should be grounded.
5. The cover of EMC filter and AC motor drive or grounding should be fixed on the metal plate and the contact area should be as large as possible.

**Choose suitable motor cable and precautions**

Improper installation and choice of motor cable will affect the performance of EMC filter. Be sure to observe the following precautions when selecting motor cable.

1. Use the cable with shielding (double shielding is the best).
2. The shielding on both ends of the motor cable should be grounded with the minimum length and maximum contact area.
3. Remove any paint on metal saddle for good ground contact with the plate and shielding.

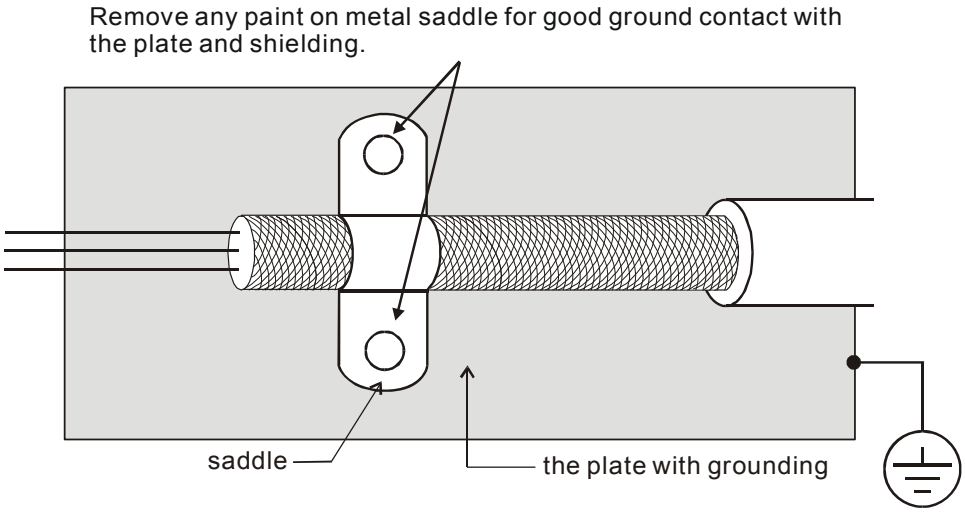


**Figure 1**

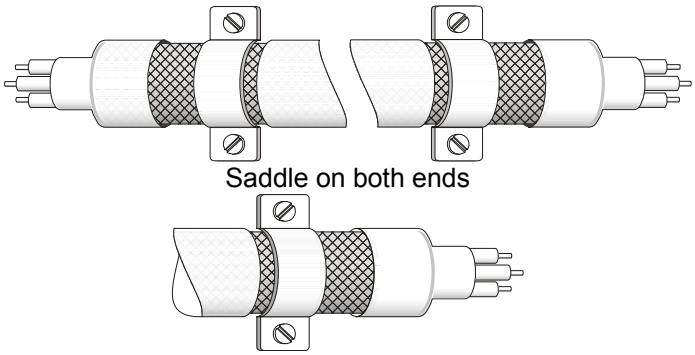


**Figure 2**

## 7-7 Digital Keypad

KPC-CE01

A: Main Display

Display frequency, current, voltage and error etc.

B: Status Indicator

F: Frequency Command
H: Output Frequency
U: User Defined Units
ERR: CAN Error Indicator
RUN: CAN Run Indicator

C: Function

( Refer to the chart follows for detail description)

### Descriptions of Keypad Functions

| Key | Descriptions |
|---|---|
| RUN | Start Operation Key<br>1. It is only valid when the source of operation command is from the keypad.<br>2. It can operate the AC motor drive by the function setting and the RUN LED will be ON.<br>3. It can be pressed again and again at stop process. |
| STOP RESET | Stop Command Key. This key has the highest processing priority in any situation.<br>1. When it receives STOP command, no matter the AC motor drive is in operation or stop status, the AC motor drive needs to execute “STOP” command.<br>2. The RESET key can be used to reset the drive after the fault occurs.<br>3. The reasons why the error cannot be reset:<br>a. Because the condition which triggers the fault is not cleared. When the condition is cleared, the fault can be reset<br>b. Because it’s the fault status checking when power-on. When the condition is cleared, repower again, and the fault can be reset |
| FWD REV | Operation Direction Key<br>1. This key is only control the operation direction NOT for activate the drive. FWD: forward, REV: reverse.<br>2. Refer to the LED descriptions for more details. |
| ENTER | ENTER Key<br>Press ENTER and go to the next level. If it is the last level then press ENTER to execute the command. |
| ESC | ESC Key<br>ESC key function is to leave current menu and return to the last menu. It is also functioned as a return key or cancel key in the sub-menu. |
| MENU | Press menu to return to main menu.<br>Menu content:<br>KPC-CE01 does not support function 5 ~13.<br>1. Parameter setup 7. Quick start 13. PC Link<br>2. Copy Parameter 8. Display Setup<br>3. Keypad Locked 9. Time Setup<br>4. PLC Function 10. Language Setup<br>5. Copy PLC 11. Startup Menu<br>6. Fault Record 12. Main Page |

| Key | Descriptions |
|---|---|
| 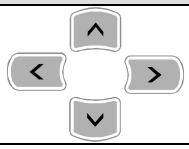 | Direction: Left / Right / Up / Down<br>1. In the numeric value setting mode, it is used to move the cursor and change the numeric value.<br>2. In the menu/text selection mode, it is used for item selection. |
| | Function Key<br>1. The functions keys have factory settings and can be defined by users. The factory settings of F1 and F4 work with the function list below. For example, F1 is JOG function, F4 is a speed setting key for adding/deleting user defined parameters.<br>2. Other functions must be defined by TPEditor first (please use version 1.40 or above). TPEditor software can be downloaded at:<br>http://www.deltaww.com/services/DownloadCenter2.aspx?secID=8&pid=2&tid=0&CID=06&itemID=060302&typeID=1&downloadID=,&title=-- Select Product Series --&dataType=8;&check=1&hl=en-US<br>Please refer to instruction for TPEditor in Chapter 10-3. |
| | HAND ON Key<br>1. This key is executed by the parameter settings of the source of Hand frequency and hand operation. The factory settings of both source of Hand frequency and hand operation are the digital keypad.<br>2. Press HAND ON key at stop status, the setting will switch to hand frequency source and hand operation source. Press HAND ON key at operation status, it stops the AC motor drive first (display AHSP warning), and switch to hand frequency source and hand operation source.<br>3. Successful mode switching for KPC-CE01, “HAND” LED will be on; for KPC-CC01, it will display HAND mode on the screen. |
| | 1. This key is executed by the parameter settings of the source of AUTO frequency and AUTO operation. The factory setting is the external terminal (source of operation is 4-20mA).<br>2. Press Auto key at stop status, the setting will switch to hand frequency source and hand operation source. Press Auto key at operation status, it stops the AC motor drive first (display AHSP warning), and switch to auto frequency source and auto operation source.<br>3. Successful mode switching for KPC-CE01, “AUTO” LED will be on; for KPC-CC01, it will display AUTO mode on the screen |

## Descriptions of LED Functions

| LED | Descriptions |
|---|---|
| | Steady ON: operation indicator of the AC motor drive, including DC brake, zero speed, standby, restart after fault and speed search.<br>Blinking: drive is decelerating to stop or in the status of base block.<br>Steady OFF: drive doesn’t execute the operation command |
| | Steady ON: stop indicator of the AC motor drive.<br>Blinking: drive is in the standby status.<br>Steady OFF: drive doesn’t execute “STOP” command. |
| | Operation Direction LED<br>1. Green light is on, the drive is running forward.<br>2. Red light is on, the drive is running backward.<br>3. Twinkling light: the drive is changing direction. |
| | (Only KPC-CE01 support this function)<br>Steady On: In HAND/LOC mode<br>Steady Off: In AUTO/REM mode |
| | (Only KPC-CE01Support this function )<br>Steady On: In AUTO/REM mode<br>Steady Off: In HAND/LOC mode |

**CANopen ~"RUN"**

RUN LED:

| LED status | Condition/State |
|---|---|
| OFF | CANopen at initial<br>No LED |
| Blinking | CANopen at pre-operation<br> 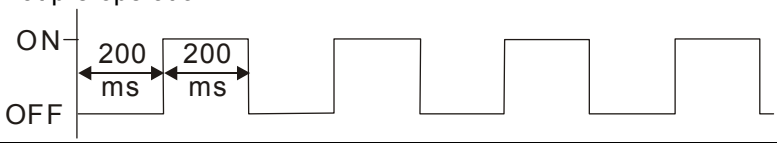 |
| Single flash | CANopen at stopped<br> 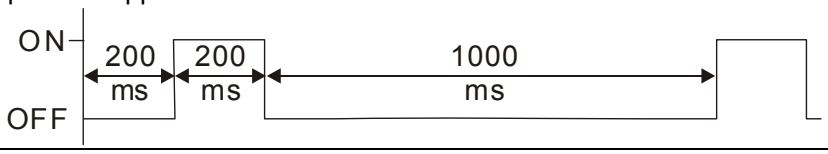 |
| ON | CANopen at operation status<br>No LED |

**CANopen ~"ERR"**

ERR LED:

| LED status | Condition/ State |
|---|---|
| OFF | No Error |
| Single flash | One message fail<br> 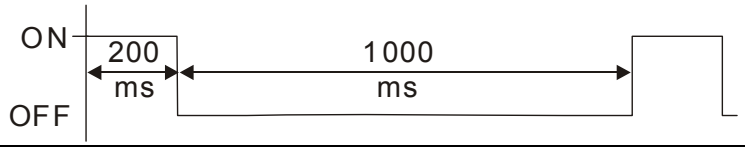 |
| Double flash | Guarding fail or heartbeat fail<br> 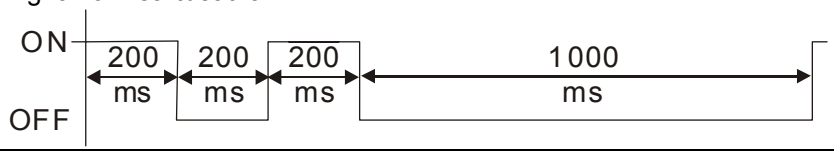 |
| Triple flash | SYNC fail<br> 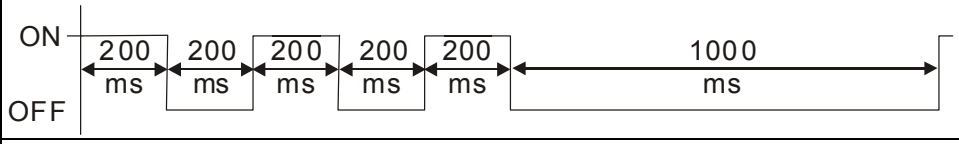 |
| ON | Bus off |

## Dimension

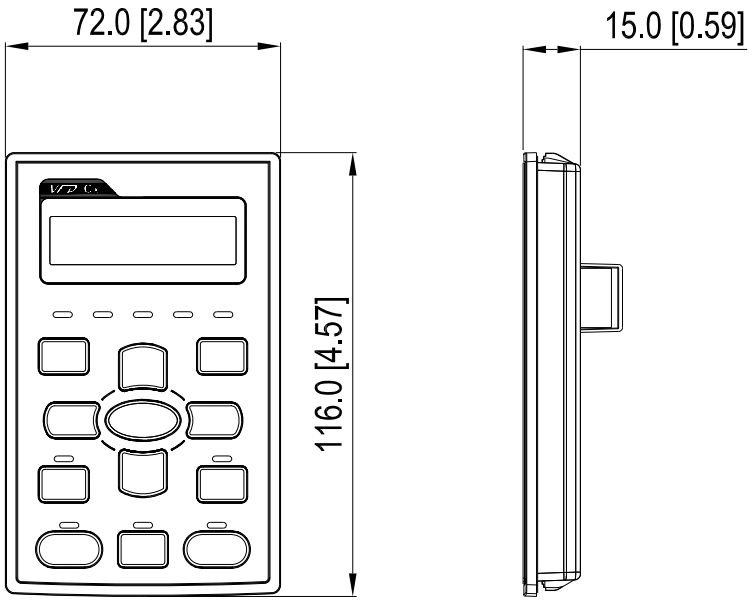


## RJ45 Extension Lead for Digital Keypad

| Part # | Description |
|---|---|
| CBC-K3FT | 3 feet RJ45 extension lead (approximately 0.9m) |
| CBC-K5FT | 5 feet RJ45 extension lead (approximately 1.5 m) |
| CBC-K7FT | 7 feet RJ45 extension lead (approximately 2.1 m) |
| CBC-K10FT | 10 feet RJ45 extension lead (approximately 3 m) |
| CBC-K16FT | 16 feet RJ45 extension lead (approximately 4.9 m) |

# 7-8 Panel Mounting (MKC-KPPK)

For MKC-KPPK model, user can choose wall mounting or embedded mounting, protection level is IP66.

It is applicable to the digital keypads (KPC-CC01 & KPC-CE01).

## Wall Mounting

accessories*1

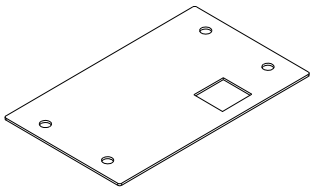

Screw *4 ~M4*p 0.7 *L8mm
Torque: 10-12 kg-cm / [8.7-10.4 lb-in.] / [1.0~1.2 Nm]

Panel cutout dimension Unit: mm [inch]

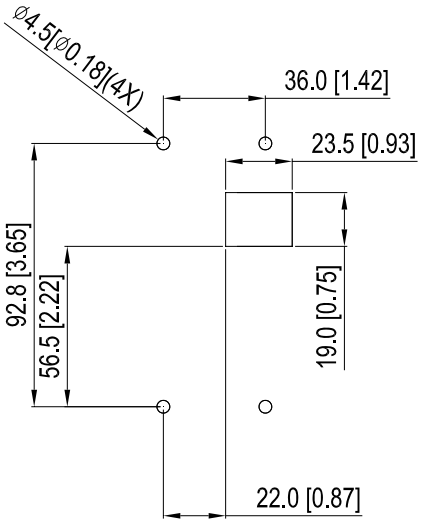


## Embedded Mounting

accessories*2

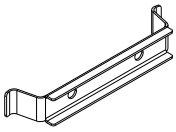

Screw *4 ~M4*p 0.7 *L8mm
Torque: 10-12 kg-cm / [8.7-10.4 lb-in.] / [1.0~1.2 Nm]

Panel cutout dimension Unit: mm [inch]

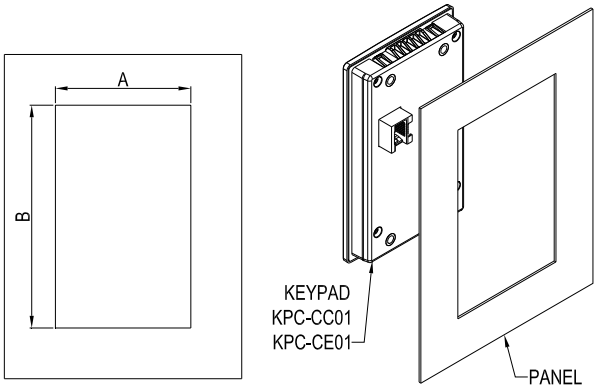


Normal cutout dimension

| Panel thickness | 1.2mm | 1.6mm | 2.0mm |
|---|---|---|---|
| A | 66.4 [2.614] | | |
| B | 110.2 [4.339] | 111.3 [4.382] | 112.5 [4.429] |

*Deviation: ±0.15mm /±0.0059inch

Cutout dimension (Waterproof level: IP66)

| Panel thickness | 1.2mm | 1.6mm | 2.0mm |
|---|---|---|---|
| A | 66.4 [2.614] | | |
| B | 110.8 [4.362] | | |

*Deviation: ±0.15mm /±0.0059inch

| Wall Mounting | Embedded Mounting |
| --- | --- |
| 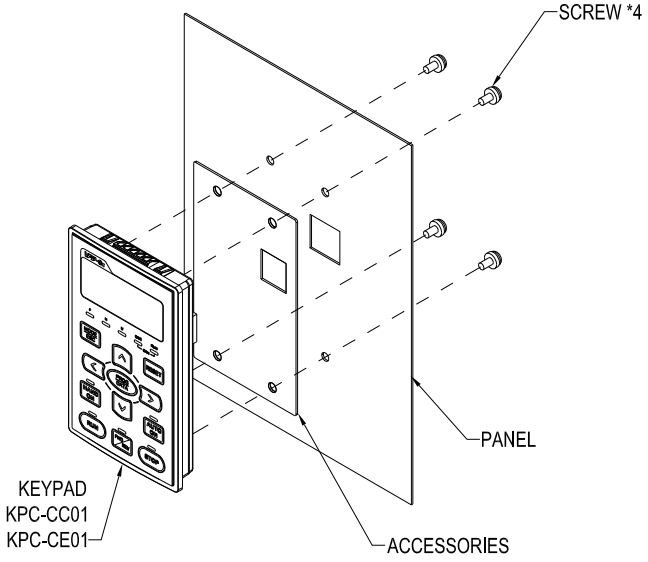 | 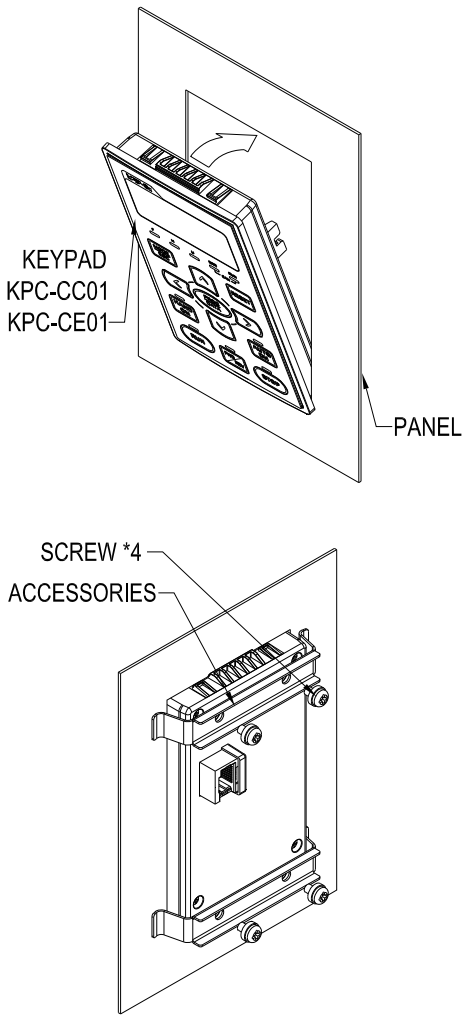 |

# 7-9 Conduit Box Kit

## ■ Appearance of conduit box

Frame D0
Applicable models
VFD450CP43S-00; VFD550CP43S-00;
VFD450CP43S-21; VFD550CP43S-21

Model number『MKC-D0N1CB』

| ITEM | Description | Qty. |
|---|---|---|
| 1 | Screw M5*0.8*10L | 4 |
| 2 | Bushing Rubber 28 | 2 |
| 3 | Bushing Rubber 44 | 2 |
| 4 | Bushing Rubber 73 | 2 |
| 5 | Conduit box cover | 1 |
| 6 | Conduit box base | 1 |

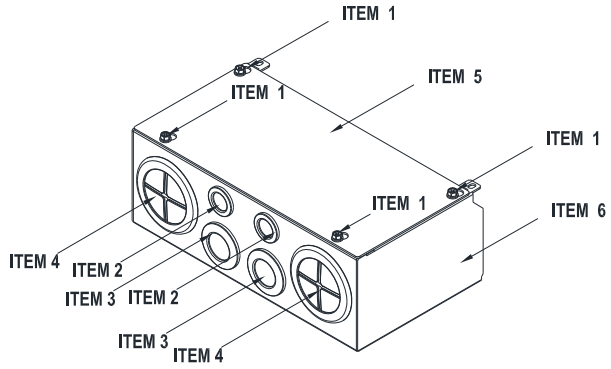


Frame D
Applicable models
VFD370CP23A-00; VFD450CP23A-00; VFD750CP43B-00;
VFD900CP43A-00; VFD370CP23A-21; VFD450CP23A-21;
VFD750CP43B-21; VFD900CP43A-21; VFD450CP63A-00;
VFD550CP63A-00; VFD450CP63A-21; VFD550CP63A-21

Model number『MKC-DN1CB』

| ITEM | Description | Qty. |
|---|---|---|
| 1 | Screw M5*0.8*10L | 4 |
| 2 | Bushing Rubber 28 | 2 |
| 3 | Bushing Rubber 44 | 2 |
| 4 | Bushing Rubber 88 | 2 |
| 5 | Conduit box cover | 1 |
| 6 | Conduit box base | 1 |

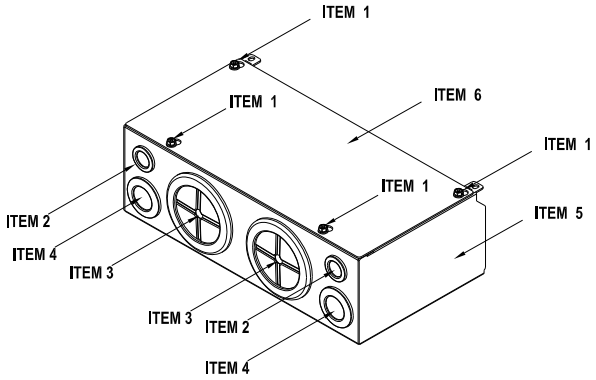


Frame E
Applicable models
VFD550CP23A-00; VFD750CP23A-00; VFD900CP23A-00;
VFD1100CP43A-00; VFD1320CP43B-00; VFD550CP23A-21;
VFD750CP23A-21; VFD900CP23A-21; VFD1100CP43A-21;
VFD1320CP43B-21; VFD750CP63A-00; VFD900CP63A-00;
VFD1100CP63A00; VFD1320CP63A-00; VFD750CP63A-21;
VFD900CP63A-21; VFD1100CP63A-21; VFD1320CP63A-21

Model number『MKC-EN1CB』

| ITEM | Description | Qty. |
|---|---|---|
| 1 | Screw M5*0.8*10L | 6 |
| 2 | Bushing Rubber 28 | 2 |
| 3 | Bushing Rubber 44 | 4 |
| 4 | Bushing Rubber 100 | 2 |
| 5 | Conduit box cover | 1 |
| 6 | Conduit bo base | 1 |

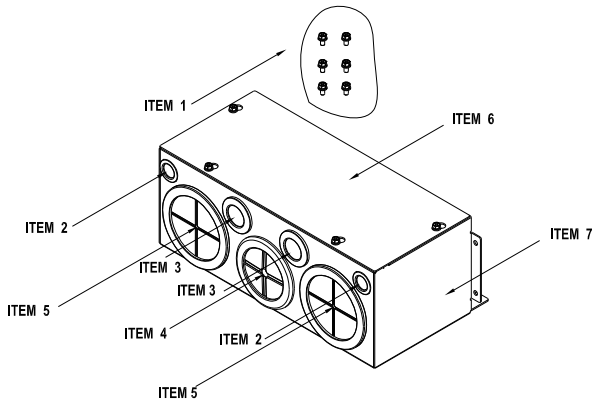


Frame F
Applicable models
VFD1600CP43A-00; VFD1850CP43B-00;
VFD1600CP43A-21; VFD1850CP43B-21;
VFD1600CP63A-00; VFD2000CP63A-00;
VFD1600CP63A-21; VFD2000CP63A-21

Model number『MKC-FN1CB』

| ITEM | Description | Qty. |
|---|---|---|
| 1 | Screw M5*0.8*10L | 8 |
| 2 | Bushing Ru ber28 | 2 |
| 3 | Bushing Rubber 44 | 4 |
| 4 | Bushing Rubber 100 | 2 |
| 5 | Conduit box cover | 1 |
| 6 | Conduit box base | 1 |

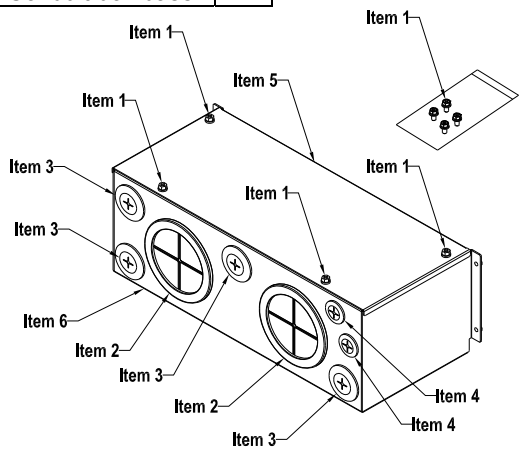

Frame G

Applicable models

VFD2200CP43A-00; VFD2800CP43A-00;
VFD2200CP43A-2; VFD2800CP43A-21;
VFD2500CP63A-00; VFD3150CP63A-00;
VFD2500CP63A-21; VFD3150CP63A-21

Model number『MKC-GN1CB』

| ITEM | Description | Qty. |
|---|---|---|
| 1 | Screw M *0.8*10L | 12 |
| 2 | Bushing Rubber 28 | 2 |
| 3 | Bushing Rubber 44 | 2 |
| 4 | Bushing Rubber 130 | 3 |
| 5 | Cond it box cover | 1 |
| 6 | Conduit box base | 1 |

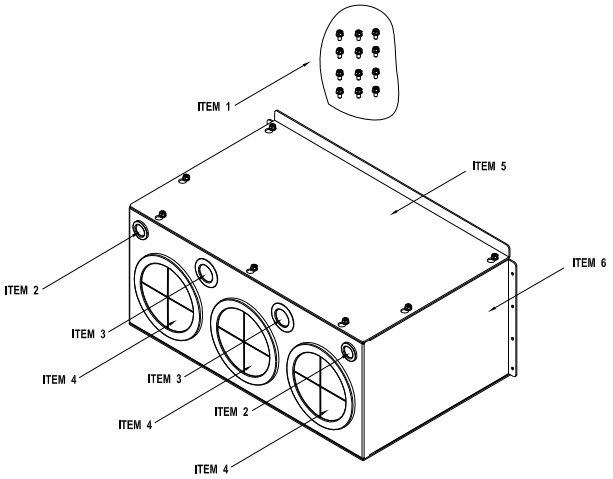

## ■ Conduit Box Installation

**Frame D0**

1. Loosen the cover screws and press the tabs on each side of the cover to remove the cover, as shown in the following figure. Screw torque: 12~15 kg-cm / [10.4~13 lb-in.] / [1.2~1.5 Nm]

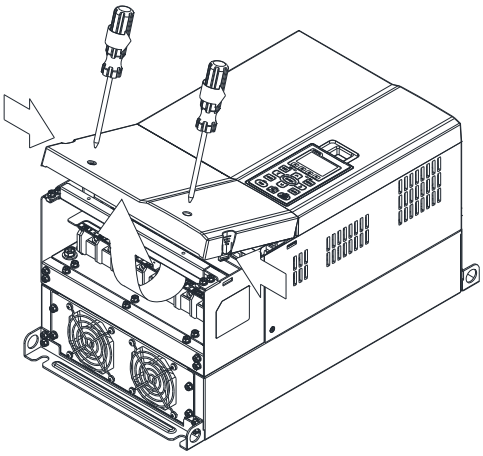

2. Remove the 5 screws shown in the following figure. Screw torque: 24~26 kg-cm / [20.8~22.6 lb-in.] / [2.4~2.5 Nm]

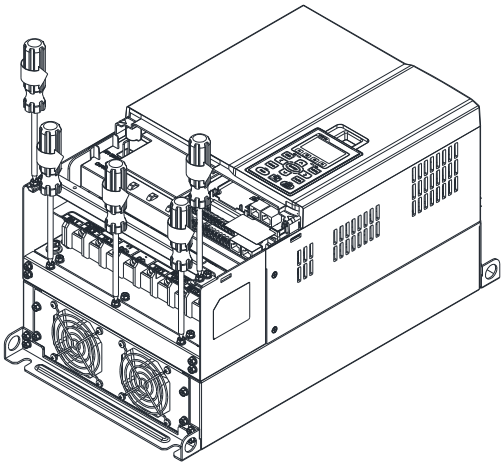

3. Install the conduit box by fasten the 5 screws shown in the following figure.
   Screw torque: 24~26 kg-cm / [20.8~22.6 lb-in.] / [2.4~2.5 Nm]

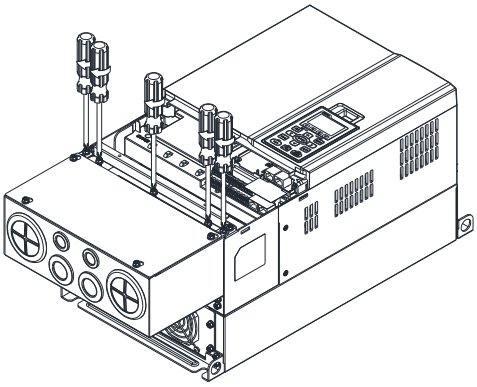

4. Fasten the 2 screws shown in the following figure. Screw torque: 12~15 kg-cm / [10.4~13 Ib-in.] / [1.2~1.5 Nm]

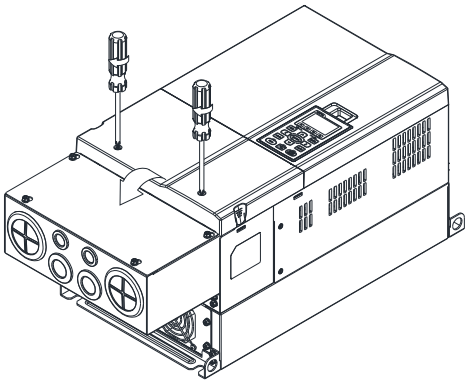

**Frame D**

1. Loosen the cover screws and press the tabs on each side of the cover to remove the cover, as shown in the following figure. Screw torque: 12~15 kg-cm / [10.4~13 Ib-in.] / [1.2~1.5 Nm]

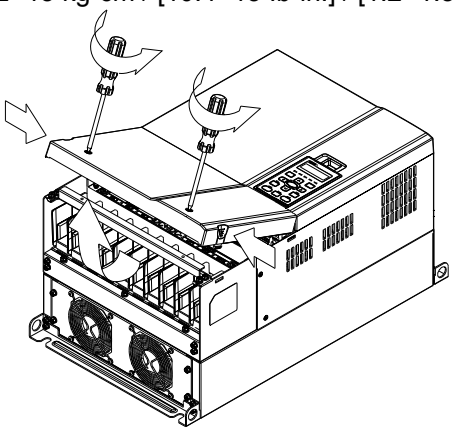

2. Remove the 5 screws shown in the following figure. Screw torque: 24~26 kg-cm / [20.8~22.6 Ib-in.] / [2.4~2.5 Nm]

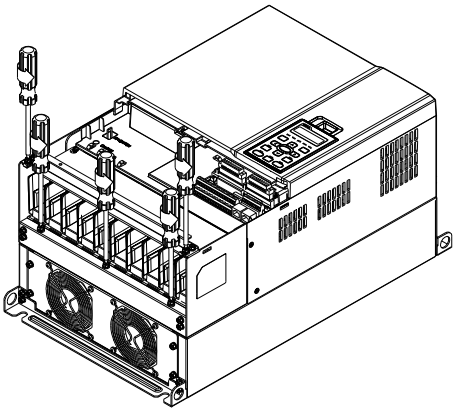

3. Install the conduit box by fasten the 5 screws shown in the following figure.
   Screw torque: 24~26 kg-cm / [20.8~22.6 Ib-in.] / [2.4~2.5 Nm]

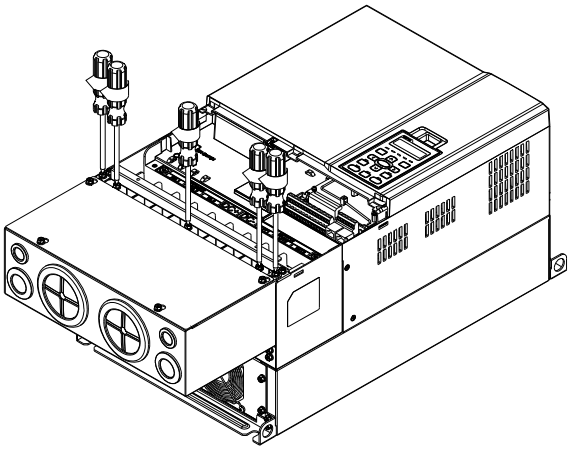

4. Fasten the 2 screws shown in the following figure. Screw torque: 12~15 kg-cm / [10.4~13 lb-in.] / [1.2~1.5 Nm]

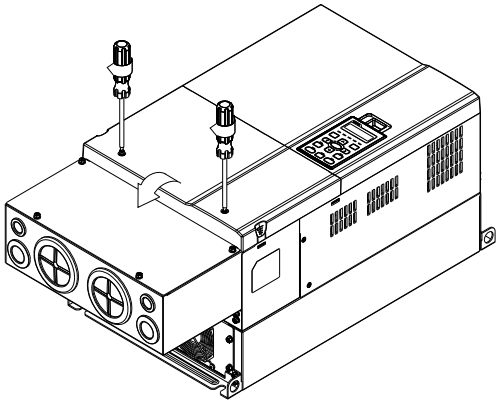

**Frame E**

1. Loosen the 4 cover screws and lift the cover; Screw torque: 12~15 kg-cm / [10.4~13 lb-in.] / [1.2~1.5 Nm]

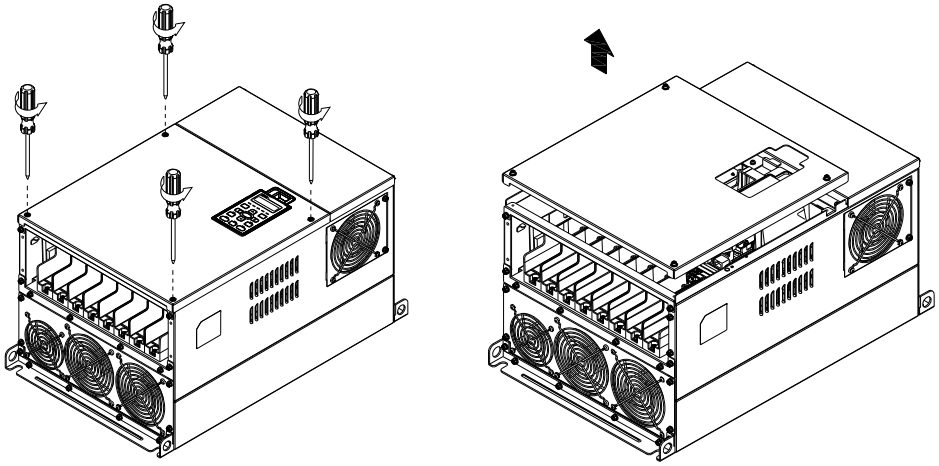

2. Fasten the 6 screws shown in the following figure and place the cover back to the original position. Screw torque: 24~26 kg-cm / [20.8~22.6 lb-in.] / [2.4~2.5 Nm]

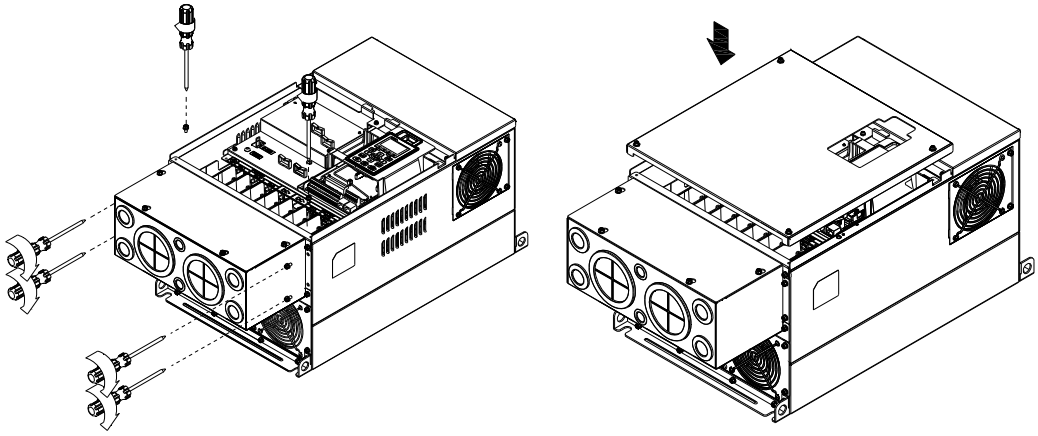

3. Fasten the 4 screws shown in the following figure. Screw torque: 12~15 kg-cm / [10.4~13 lb-in.] / [1.2~1.5 Nm]

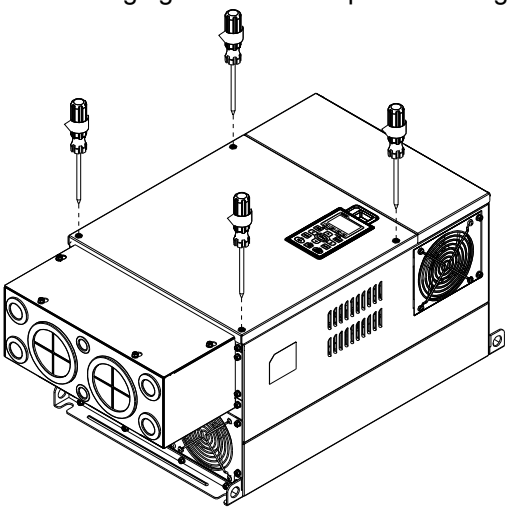

**Frame F**

1. Loosen the cover screws and press the tabs on each side of the cover to remove the cover, as shown in the following figure. Screw torque: 12~15 kg-cm / [10.4~13 lb-in.] / [1.2~1.5 Nm]

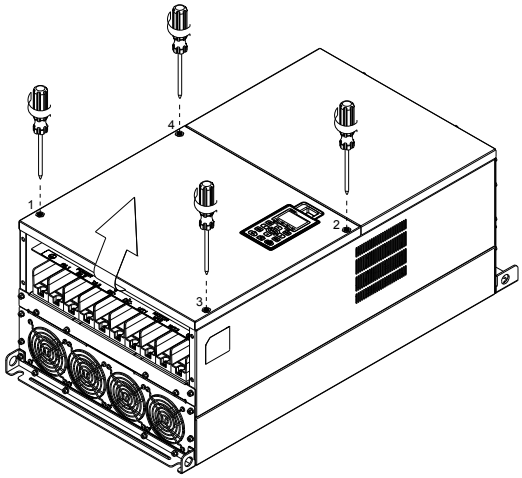


2. Install the conduit box by fastens the 4 screws, as shown in the following figure.
   Screw torque: 24~26 kg-cm / [20.8~22.6 lb-in.] / [2.4~2.5 Nm]

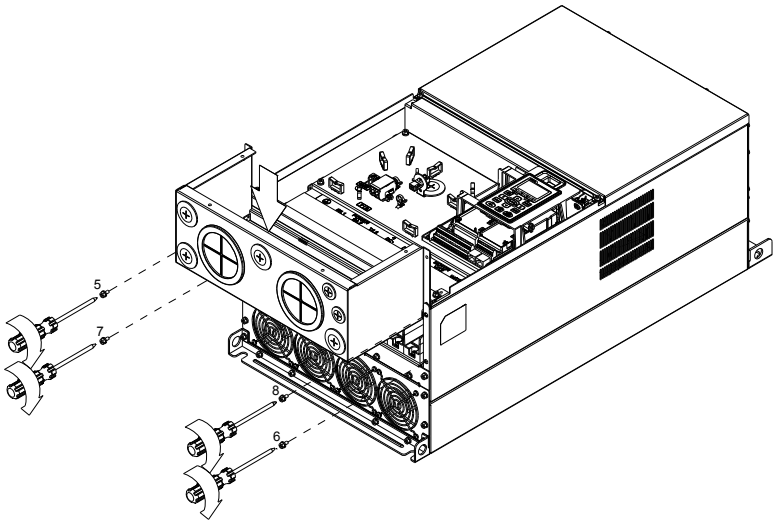

3. Install the conduit box by fasten all the screws shown in the following figure
   Screw 9~12 torque: 12~15 kg-cm / [10.4~13 lb-in.] / [1.2~1.5 Nm]
   Screw 13~16 torque: 24~26 kg-cm / [20.8~22.6 lb-in.] / [2.4~2.5 Nm]

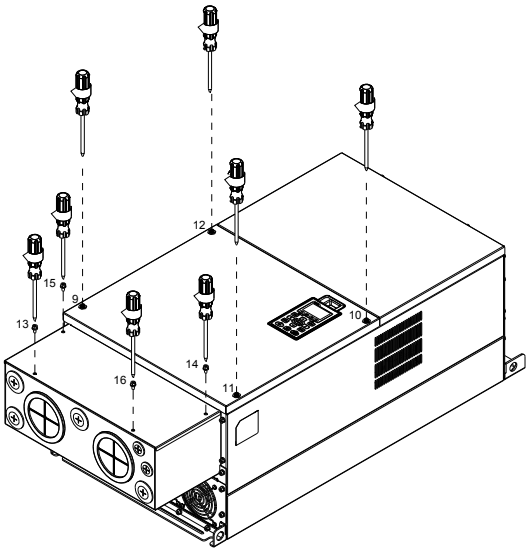


**Frame G**

1. On the conduit box, loosen 7 of the cover screws and remove the cover「Screw torque: 24~26 kg-cm / [20.8~22.6 lb-in.] / [2.4~2.5 Nm]」. On the drive, loosen 4 of the cover screws and press the tabs on each side of the cover to remove the cover, as shown in the following figure. Screw torque: 12~15 kg-cm / [10.4~13 lb-in.] / [1.2~1.5 Nm]

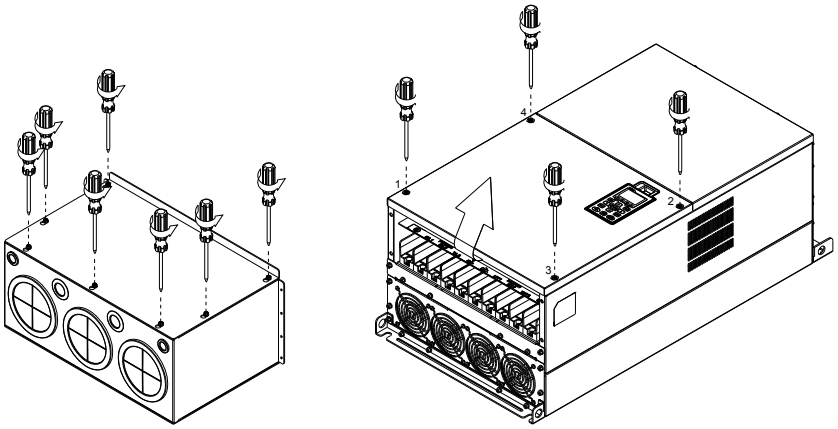


2 Remove the top cover and loosen the screws.
   M5 Screw torque: 24~26 kg-cm / [20.8~22.6 lb-in.] / [2.4~2.5 Nm]
   M8 Screw torque: 100~120 kg-cm / [86.7~104.1 lb-in.] / [9.8~11.8 Nm]

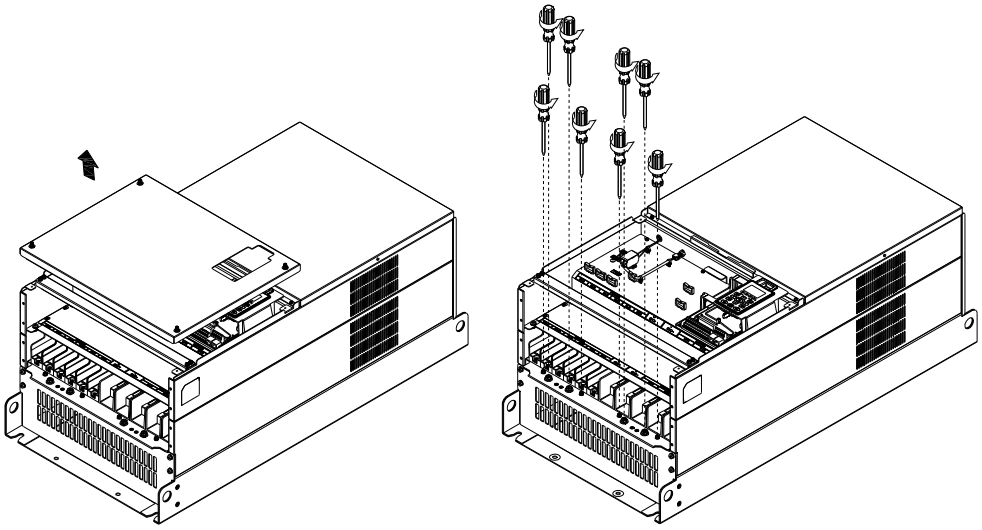

3 Install the conduit box by fastening all the screws shown in the following figure.
M5 Screw torque: 24~26kg-cm (20.8~22.6Ib-in)
M8 Screw torque: 100~120kg-cm (86.7~104.1Ib-in)

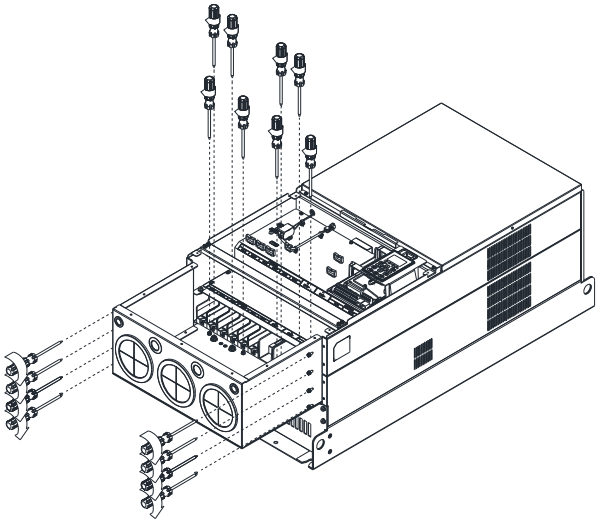

Fasten all the screws. Screw torque: 24~26 kg-cm / [20.8~22.6 Ib-in.] / [2.4~2.5 Nm]

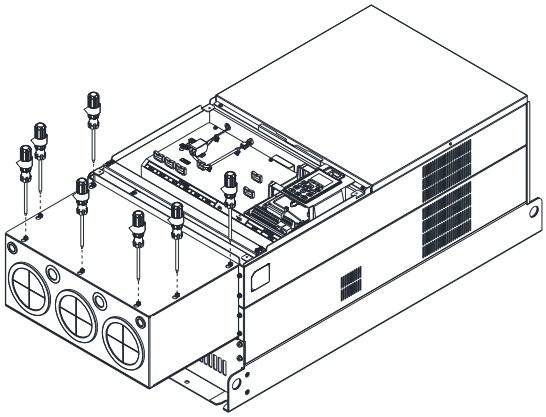

Place the cover back to the top and fasten the screws (as shown in the figure).
Screw torque: 12~15 kg-cm / [10.4~13 Ib-in.] / [1.2~1.5 Nm]

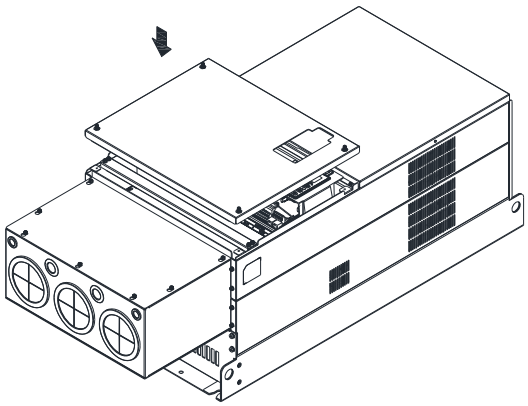

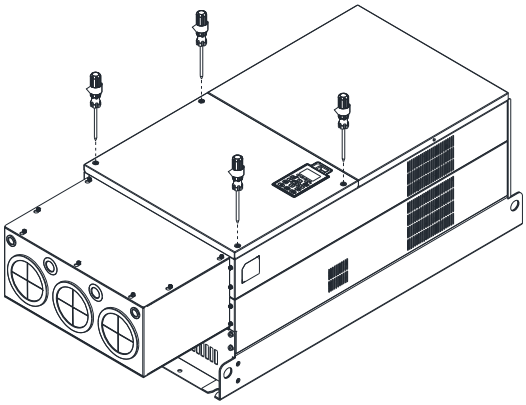

# 7-10 Fan Kit

## ■ Appearance of the fan kit

NOTE: The fan does not support hot swap function. For replacement, turn the power off before replacing the fan.

Frame A

Heat sink Fan Model『MKC-AFKM』

Applicable Model

VFD022CP23A-21; VFD037CP23A-21; VFD055CP23A-21;
VFD022CP43B/4EB-21; VFD037CP43B/4EB-21;
VFD040CP43A/4EA-21; VFD055CP43B/4EB-21;
VFD015CP53A-21; VFD022CP53A-21; VFD037CP53A-21 uses MKC-AFKM
VFD075CP43B/4EB-21 uses MKC-AFKM2

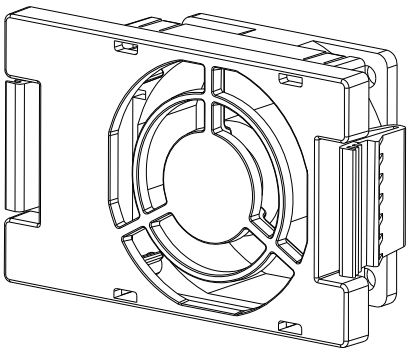

Frame B

Heat sink Fan Model『MKC-BFKM1』

Applicable Model

VFD075CP23A-21;
VFD110CP43B-21;
VFD110CP4EB-21;
VFD055CP53A-21;
VFD075CP53A-21;
VFD110CP53A-21;
VFD150CP53A-21

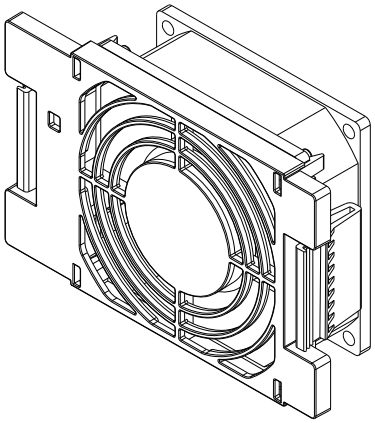

Frame B

Heat sink Fan Model 『MKC-BFKM2』

Applicable Model

VFD110CP23A-21 uses MKC-BFKM2
VFD150CP23A-21 uses MKC-BFKM3
VFD150CP43B-21 uses MKC-BFKM2
VFD150CP4EB-21 uses MKC-BFKM2
VFD185CP43B-21 uses MKC-BFKM2
VFD185CP4EB-21 uses MKC-BFKM2
(The MKC-BFKM2 and MKC-BFKM 3 have the same shape)

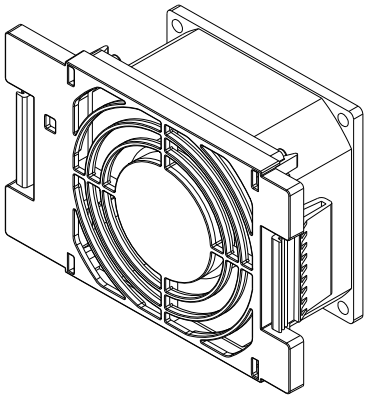

Frame B

Capacitor Fan Model 『MKC-BFKB』

Applicable Model

VFD075CP23A-21; VFD110CP23A-21;
VFD110CP43B-21; VFD110CP4EB-21;
VFD150CP23A-21; VFD150CP43B-21;
VFD150CP4EB-21; VFD185CP43B-21;
VFD185CP4EB-21

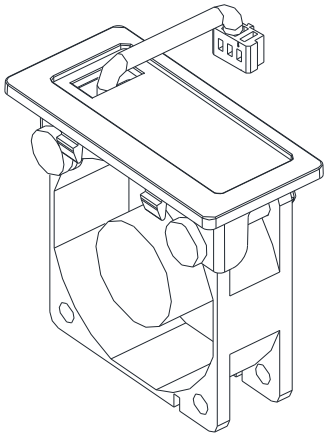

| | |
|---|---|
| Frame C<br><br>Applicable Model<br>VFD185CP23A-21<br>VFD220CP23A-21<br>VFD300CP23A-21<br>VFD185CP63A-21;<br>VFD220CP63A-21;<br>VFD300CP63A-21;<br>VFD370CP63A-21 | Capacitor Fan Model 『MKC-CFKB1』<br> 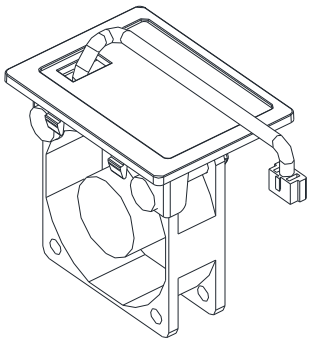 |
| Frame C<br><br>Applicable Model<br>VFD220CP43A-21<br>VFD220CP4EA-21<br>VFD300CP43B-21<br>VFD300CP4EB-21<br>VFD370CP43B-21<br>VFD370CP4EB-21 | Capacitor Fan Model 『MKC-CFKB2』<br> 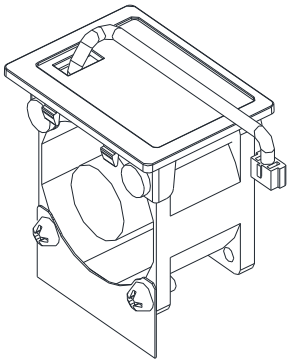 |
| Frame C<br><br>Following Model use one set of MKC-CFKM:<br>VFD220CP43A/4EA-21; VFD300CP43B/4EB-21;<br>VFD370CP43B-21<br><br>Following Model use two sets of MKC-CFKM<br>VFD185CP23A-21; VFD220CP23A-21; VFD300CP23A-21;<br>VFD370CP4EB-21 | Heat sink Fan 『MKC-CFKM』<br> 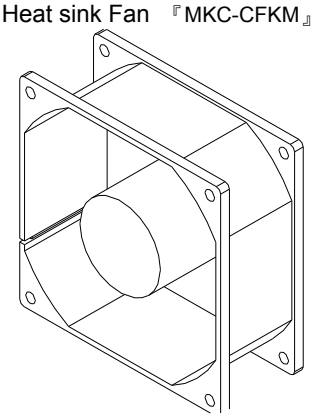 |

| | | |
|---|---|---|
| Frame D0<br><br>Applicable Model<br>VFD450CP43S-00/21; VFD550CP43S-00/21 | Heat sink Fan Model<br>『MKC-D0FKM』<br> 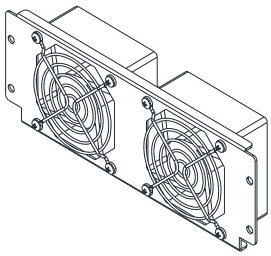 | Capacitor Fan Model<br>『MKC-DFKB』<br> 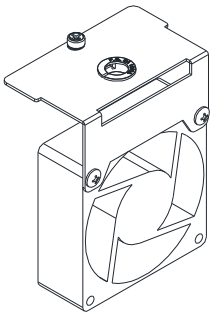 |
| Frame D<br><br>Applicable Model<br>VFD370CP23A-00/21; VFD450CP23A-00/21;<br>VFD750CP43A-00/21; VFD900CP43A-00/21<br>VFD450CP63A-00; VFD550CP63A-00;<br>VFD450CP63A-21; VFD550CP63A-21 | Heat sink Fan Model<br>『MKC-DFKM』<br> 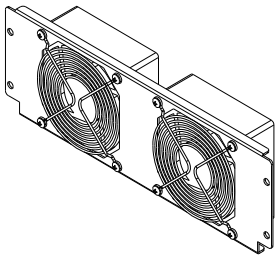 | |

| | |
|---|---|
| Frame E<br><br>Applicable Model<br>VFD550CP23A-00/21; VFD750CP23A-00/21 | Heat sink Fan Model 『MKC-EFKM1』<br> 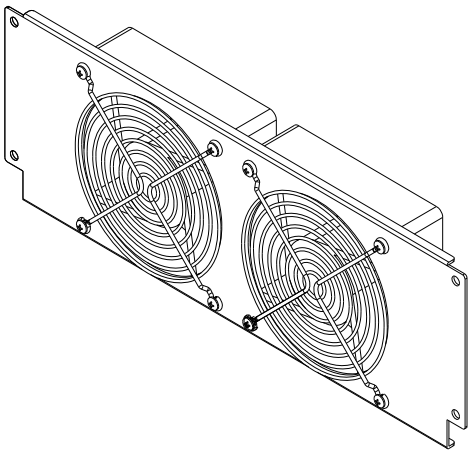 |
| Frame E<br><br>Applicable Model<br>VFD900CP23A-00/21; VFD1100CP43A-00/21<br>VFD1320CP43B-00/21; | Heat sink Fan Model『MKC-EFKM2』<br> 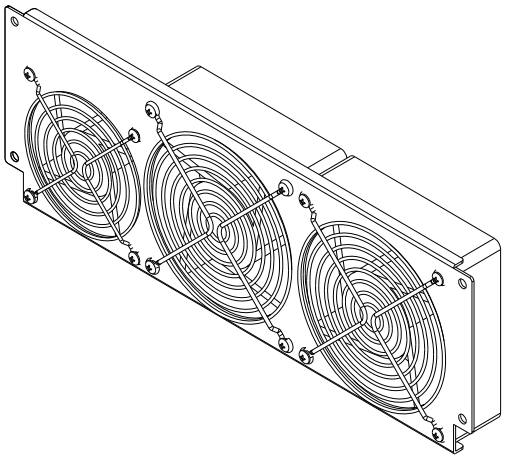 |
| Frame E<br><br>Applicable Model<br>VFD900CP23A-00/21; VFD1100CP43A-00/21;<br>VFD1320CP43A-00/21; VFD900CP63A-00;<br>VFD1100CP63A-00; VFD1320CP63A-00; VFD900CP63A-21;<br>VFD1100CP63A-21; VFD1320CP63A-21 | Capacitor Fan Model 『MKC-EFKB』<br> 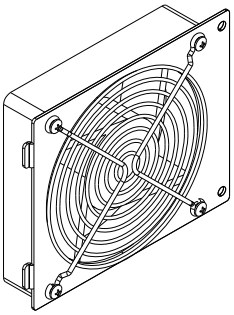 |
| Frame F<br><br>Applicable Model<br>VFD900CP23A-00/21; VFD1100CP43A-00/21;<br>VFD1320CP43A-00/21; VFD900CP63A-00;<br>VFD1100CP63A-00; VFD1320CP63A-00;<br>VFD900CP63A-21; VFD1100CP63A-21;<br>VFD1320CP63A-21 | Heat sink Fan Model 『MKC-FFKM』<br> 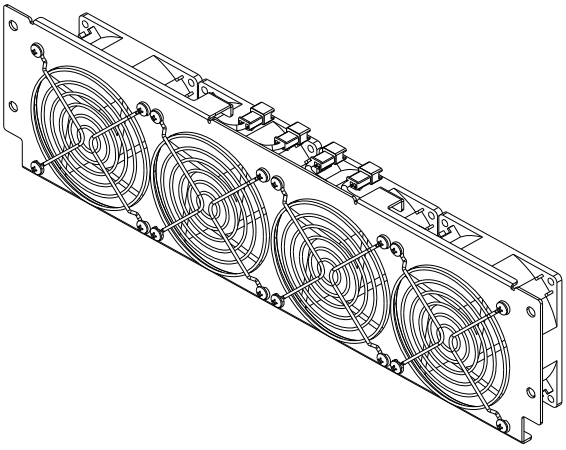 |

| | |
|---|---|
| Frame F<br><br>Applicable Model<br>VFD1600CP43A-00/21; VFD1850CP43B-00/21<br>VFD1600CP63A-00; VFD2000CP63A-00;<br>VFD1600CP63A-21; VFD2000CP63A-21 | Capacitor Fan Model 『MKC-FFKB』<br> 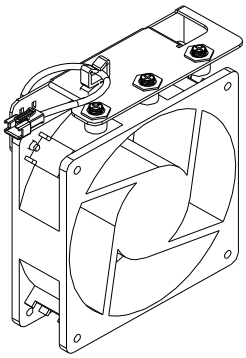 |
| Frame G<br><br>Applicable Model<br>VFD2200CP43A-00/21; VFD2800CP43A-00/21<br>VFD2500CP63A-00; VFD3150CP63A-00;<br>VFD2500CP63A-21; VFD3150CP63A-21 | Heat sink Fan Model 『MKC-GFKM』<br> 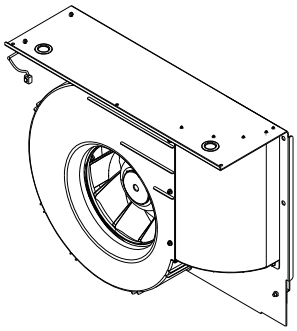 |
| Frame H<br><br>Applicable Model<br>VFD3150CP43A-00; VFD3150CP43C-00/21;<br>VFD3550CP43A-00; VFD3550CP43C-00/21;<br>VFD4000CP43A-00; VFD4000CP43C-00/21;<br>VFD5000CP43A-00; VFD5000CP43C-00/21 | Heat sink Fan Model 『MKC-HFKM』<br> 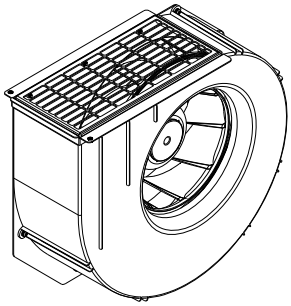 |
| Frame H<br><br>Applicable Model<br>VFD4000CP63A-00; VFD4500CP63A-00;<br>VFD5600CP63A-00; VFD6300CP63A-00;<br>VFD4000CP63A-21; VFD4500CP63A-21;<br>VFD5600CP63A-21; VFD6300CP63A-21 | Heat sink Fan Model 『MKC-HFKM1』<br> 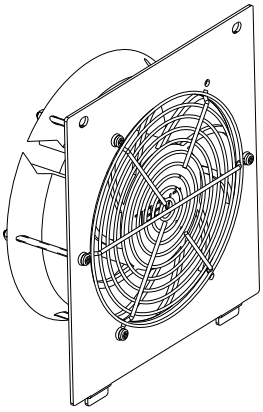 |

## ■ Fan Removal

Frame A

Model『MKC-AFKM』: Heat Sink Fan

Applicable model

VFD022CP23A-21; VFD037CP23A-21; VFD055CP23A-21; VFD022CP43B/4EB-21; VFD037CP43B/4EB-21; VFD040CP43A/4EA-21; VFD055CP43B/4EB-21; VFD015CP53A-21; VFD022CP53A-21; VFD037CP53A-21;

Model『MKC-AFKM2』: Heat Sink Fan

Applicable model

VFD075CP43B/4EB-21

1. Refer to Figure 1, press the tabs on both side of the fan to successfully remove the fan.
2. Disconnect the power terminal before removing the fan. (As shown below.)

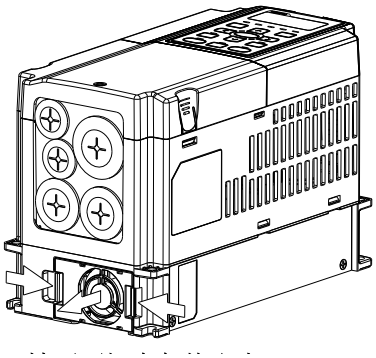

Figure 1

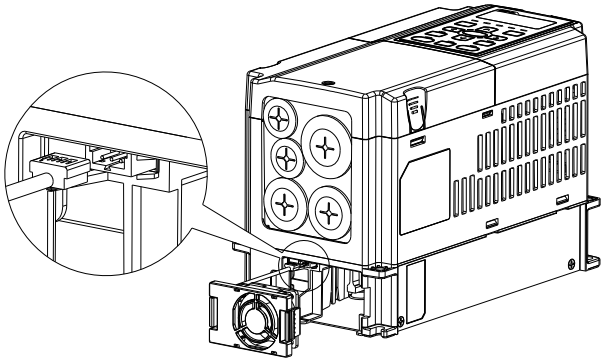

Figure 2

Frame B

Model『MKC-BFKM1』Heat Sink Fan

Applicable model

VFD075CP23A-21; VFD110CP43B/4EB-21; VFD055CP53A-21; VFD075CP53A-21; VFD110CP53A-21; VFD150CP53A-21;

Model『MKC-BFKM2』Heat Sink Fan

Applicable model

VFD110CP23A-21; VFD150CP43B/4EB-21; VFD185CP43B/4EB-21

Model『MKC-BFKM3』Heat Sink Fan

Applicable model

VFD150CP23A-21

1. Refer to Figure 1, press the tab on both side of the fan to successfully remove the fan.
2. Disconnect the power terminal before removing the fan. (As shown below.)

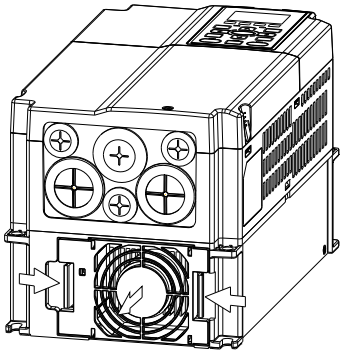

Figure 1

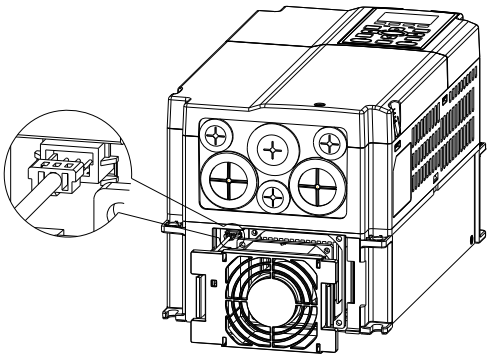

Figure 2

Frame B

Model『MKC-BFKB』Capacitor Fan

Applicable model

VFD075CP23A-21; VFD110CP23A-21; VFD110CP43B/4EB-21; VFD150CP23A-21; VFD150CP43B/4EB-21; VFD185CP43B/4EB-21; VFD055CP53A-21; VFD075CP53A-21; VFD110CP53A-21; VFD150CP53A-21;

Disconnect fan power and pull out the fan by using flathead screwdriver. (As shown in the larger picture)

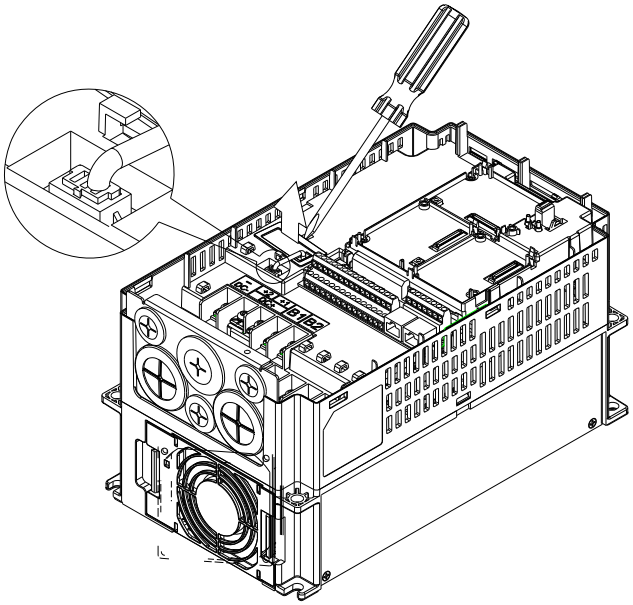

Frame C

Model『MKC-CFKM』Heat Sink Fan

Applicable model

Single fan kit applicable models (only fan kit 1 is required to be installed):

VFD220CP43A/4EA-21; VFD300CP43B/4EB-21; VFD370CP43B-21; VFD185CP63A-21; VFD220CP63A-21; VFD300CP63A-21; VFD370CP63A-21;

Duo fan kit applicable models (both fan kit 1 and 2 are required to be installed): VFD185CP23A-21; VFD220CP23A-21; VFD300CP23A-21; VFD370CP4EB-21

1. (As shown Figure 1) Before removing the fan, remove the cover by using a slotted screwdriver.

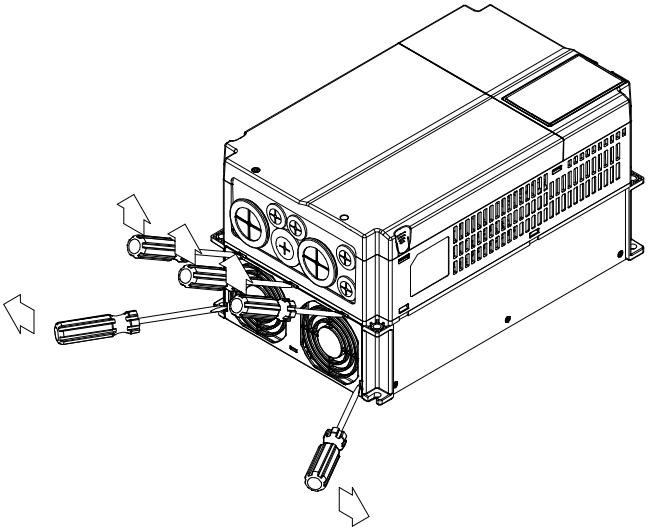

Figure 1

2. (As shown in Figure 2), remove the power connector, loosen the screw and remove the fan kit. When installing the fan kit, have the label on the fan kit facing inside of the motor drive.
   Screw's torque force: 10~12 kg-cm / [8.7~10.4 lb-in.] / [1.0~1.2 Nm]

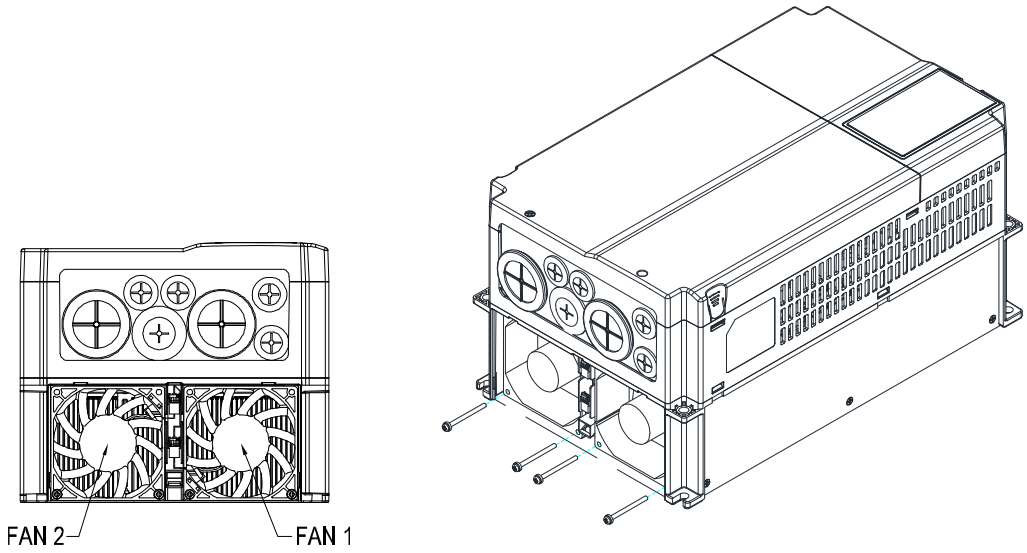


Figure 2

Frame C

Model『MKC-CFKB1』Capacitor Fan

Applicable model

VFD185CP23A-21; VFD220CP23A-21; VFD300CP23A-21

Model『MKC-CFKB2』Capacitor Fan

Applicable model

VFD220CP43A/4EA-21; VFD300CP43B/4EB-21; VFD370CP43B/4EB-21

Disconnect fan power and pull out the fan by using flathead screwdriver. (As shown in the larger picture)

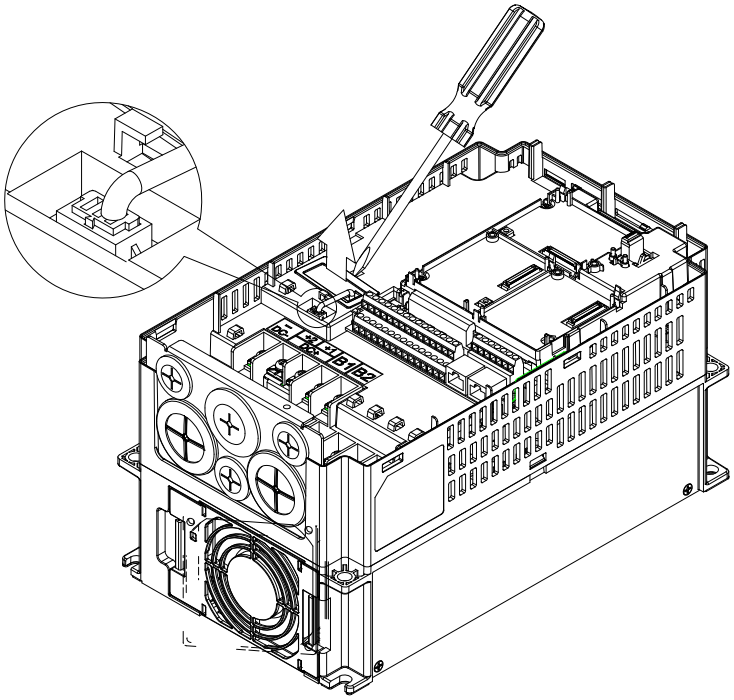

Figure 1

Frame D0

Model『MKC-DFKB』Capacitor Fan

Applicable model

VFD450CP43S-00/21; VFD550CP43S-00/21

1. Loosen screw 1 and screw 2, press the tab on the right and left to remove the cover, follow the direction the arrows indicate. Press on top of digital keypad to properly remove it. Screw 1, 2『Torque: 12~15 kg-cm / [8.6~10.4 lb-in.] / [1.2~1.5 Nm]』

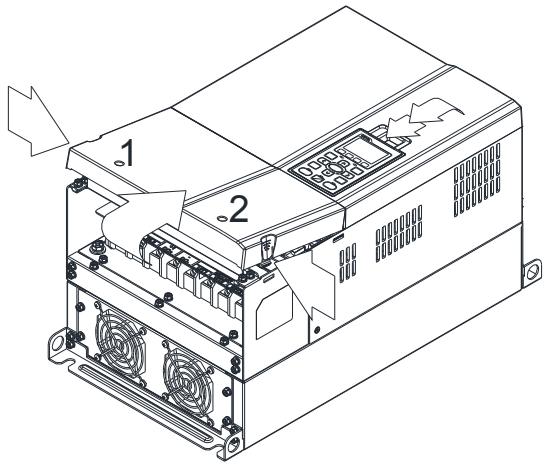


Figure 1

2. (Figure 2) Loosen screw 3, press the tab on the right and the left to remove the cover. Screw 3『Torque: 6~8 kg-cm／[5.2~6.9 lb-in.] / [0.6~0.8 Nm]』

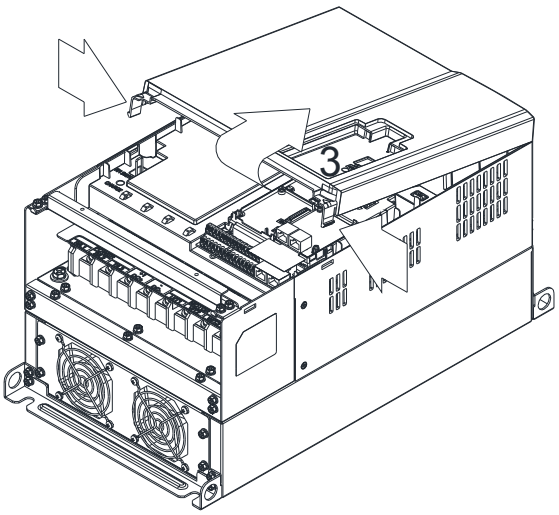


Figure 2

3. Loosen screw 4 (figure 3) and disconnect fan power and pull out the fan. (As shown in the enlarged picture 3) Screw 4『Torque: 10~12 kg-cm / [8.7~10.4 lb-in.] / [1.0~1.2 Nm]』

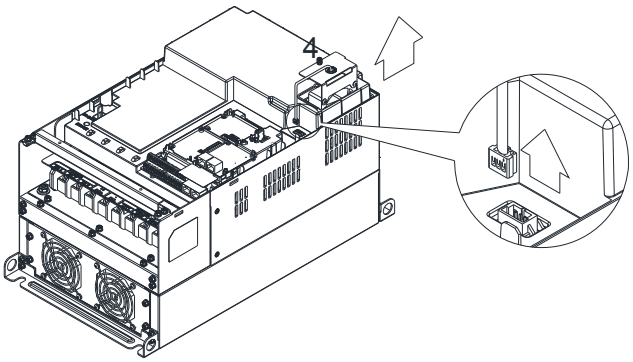


Figure 3

Frame D0

Model『MKC-D0FKM』Heat Sink Fan

Applicable model

VFD450CP43S-00/21; VFD550CP43S-00/21

1. Loosen the screw and remove the fan kit. 『Screw torque: 24~26 kg-cm / [20.8~22.6 lb-in. / [2.4~2.5 Nm]』
2. (As shown Figure 1) Before removing the fan, remove the cover by using a slotted screwdriver.

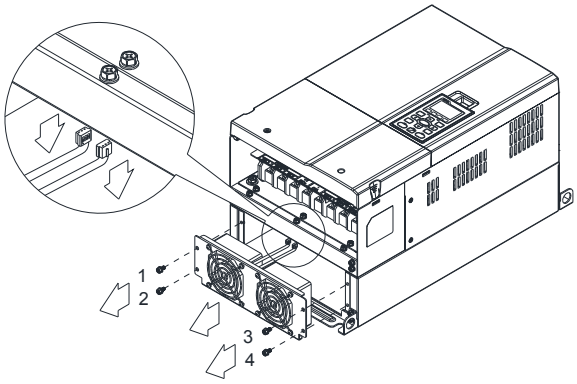


Figure 1

Frame D

Model『MKC-DFKB』Capacitor Fan

Applicable model

VFD370CP23A-00/21; VFD450CP23A-00/21; VFD450CP43A-00/21; VFD550CP43A-00/21;

VFD750CP43B-00/21; VFD900CP43A-00/21; VFD450CP63A-00; VFD550CP63A-00; VFD450CP63A-21;

VFD550CP63A-21;

1. Loosen screw 1 and screw 2, press the on the right and the left to remove the cover, follow the direction the arrows indicate. Press on top of digital keypad to properly remove it. Screw 1, 2『Torque: 12~15 kg-cm / [8.6~10.4 lb-in.] / [1.2~1.5 Nm]』
2. (Figure 2) Loosen screw 3, press the tab on the right and the left to remove the cover.
   Screw 3, 4『Torque: 6~8 kg-cm／[5.2~6.9 lb-in.] / [0.6~0.8 Nm]』

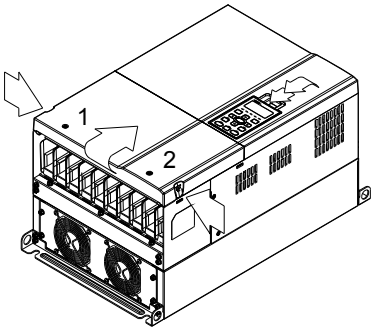


Figure 1

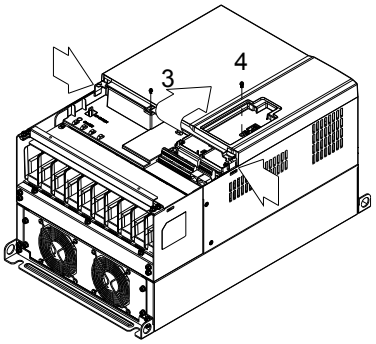


Figure 2

3. Loosen screw 5 (figure 3) and disconnect fan power and pull out the fan. (As shown in the enlarged picture 3)
   Screw 5『Torque: 10~12 kg-cm / [8.7~10.4 lb-in.] / [1.0~1.2 Nm]』

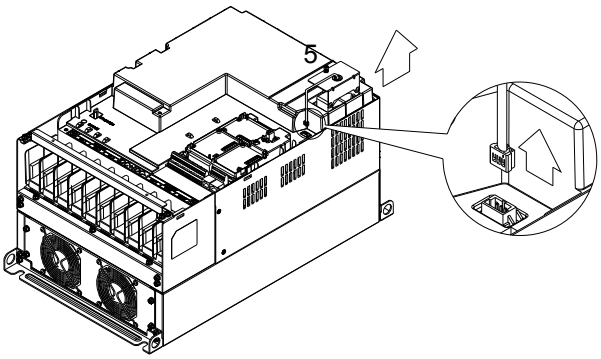


Figure 3

Frame D

Model『MKC-DFKM』Heat Sink Fan

Applicable model

VFD370CP23A-00/21; VFD450CP23A-00/21; VFD450CP43A-00/21; VFD550CP43A-00/21;

VFD750CP43B-00/21; VFD900CP43A-00/21; VFD450CP63A-00; VFD550CP63A-00; VFD450CP63A-21;

VFD550CP63A-21

1. Loosen the screw and remove the fan kit.『Screw torque: 24~26 kg-cm / [20.8~22.6 lb-in.] / [2.4~2.5 Nm]』
2. (As shown Figure 1) Before removing the fan, remove the cover by using a slotted screwdriver.

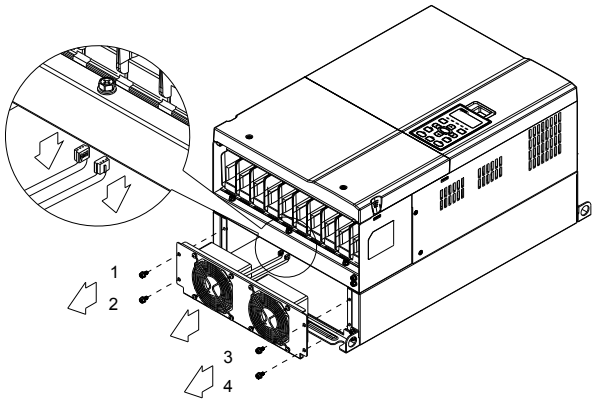


Figure 1

Frame E

Model『MKC-EFKM1』Heat Sink Fan

Applicable model

VFD550CP23A-00/21; VFD750CP23A-00/21

1. Loosen screw 1~4 (figure 1) and disconnect fan power and pull out the fan. (As shown in the enlarged picture 1) Screw1~4『Torque: 24~26 kg-cm / [20.8~22.6 lb-in.] / [2.4~2.5 Nm]』

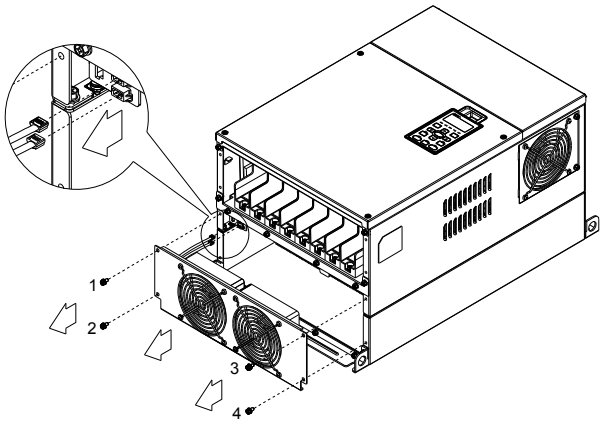


Figure 1

Model『MKC-EFKM2』Heat Sink Fan

Applicable model

VFD900CP23A-00/21; VFD1100CP43A-00/21;

VFD1320CP43B-00/21

1. Loosen screw 1~4 (figure 2) and disconnect fan power and pull out the fan. (As shown in the enlarged picture 2) Screw1~4『Torque: 24~26 kg-cm / [20.8~22.6 lb-in.] / [2.4~2.5 Nm]』

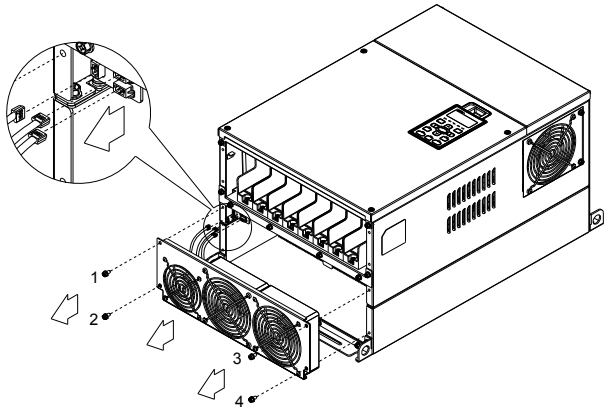


Figure 2

Frame E

Applicable model

VFD750CP63A-00; VFD900CP63A-00; VFD1100CP63A-00; VFD1320CP63A-00;

VFD750CP63A-21;VFD900CP63A-21; VFD1100CP63A-21; VFD1320CP63A-21

Model『MKC-EFKM3』: Heat Sink Fan

Loosen screw 1~4 (figure 3) and disconnect fan power and pull out the fan. (As shown in the enlarged picture 3) Screw1~4『Torque: 24~26 kg-cm / [20.8~22.6 lb-in.] / [2.4~2.5 Nm]』

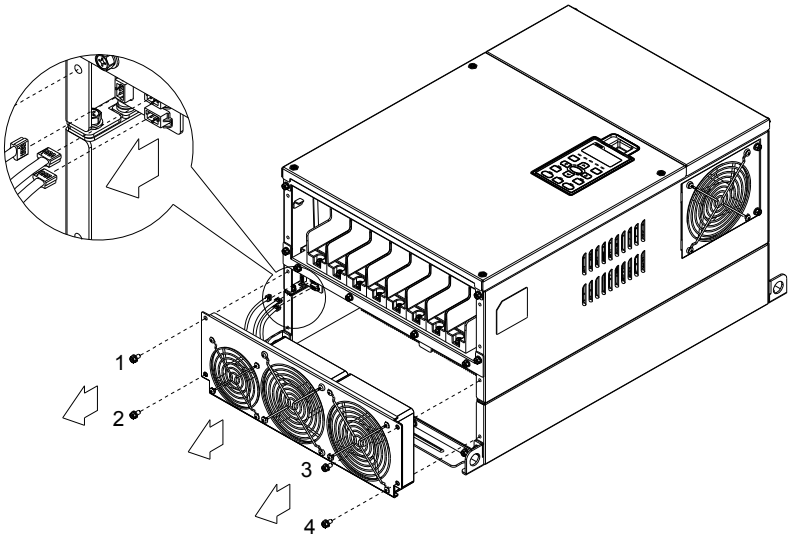


Figure 3

Model『MKC-EFKB』Capacitor Fan

Applicable model

VFD550CP23A-00/21; VFD750CP23A-00/21; VFD900CP23A-00/21; VFD1100CP43A-00/21;

VFD1320CP43B-00/21

1. Loosen screw 1~2 (figure 4) and disconnect fan power and pull out the fan. (As shown in the enlarged picture 3) Screw1~2『Torque: 24~26kgf-cm (20.8~22.6lb-in)』

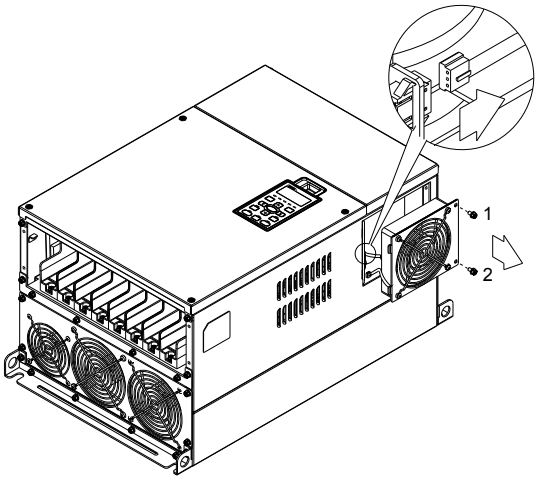


Figure 4

Frame F

Applicable model

VFD1600CP43A-00/21; VFD1850CP43B-00/21; VFD1600CP63A-00; VFD2000CP63A-00; VFD1600CP63A-21; VFD2000CP63A-21

Fan model『MKC-FFKM』Heat Sink Fan

Loosen the screws and plug out the power of fan before removing (figure 1). Screw torque: 12~15 kg-cm / [10.4~13 lb-in.] / [1.2~1.5 Nm]』

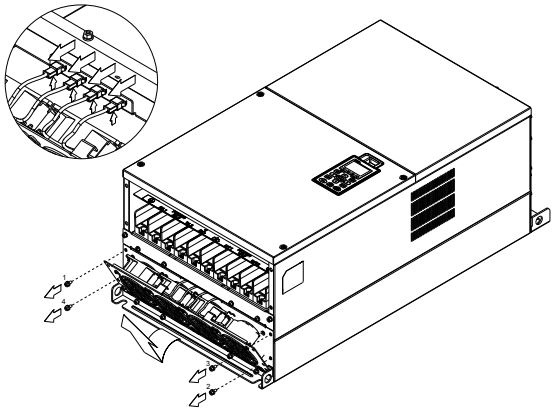

Figure 1

Fan model 『MKC-FFKB』Capacitor Fan

(1) Loosen the screw (figure 1) and removes the cover. Screw torque: 12~15 kg-cm / [10.4~13 lb-in.] / [1.2~1.5 Nm]

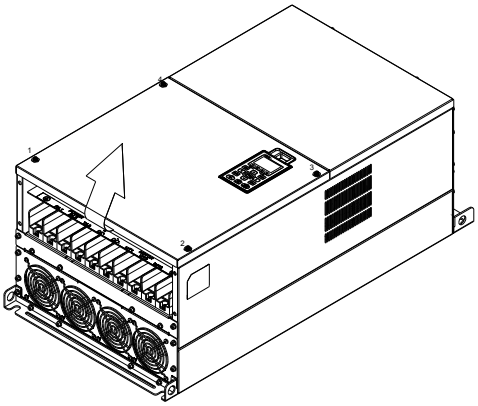

Figure 1

(2) Loosen the screw (figure 2) and removes the cover. Screw torque: 24~26 kg-cm / [20.8~22.6 lb-in.] / [2.4~2.5 Nm]

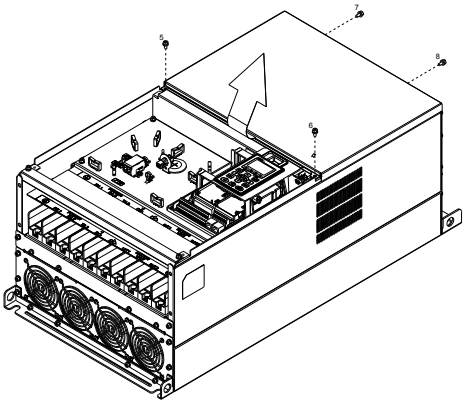

Figure 2

(3) Loosen the screws and remove the fan. (figure 3 and figure 4)
Screw torque: 24~26 kg-cm / [20.8~22.6 lb-in.] / [2.4~2.5 Nm]

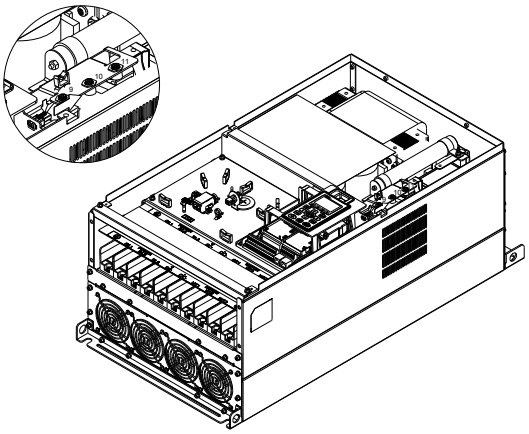

Figure 3

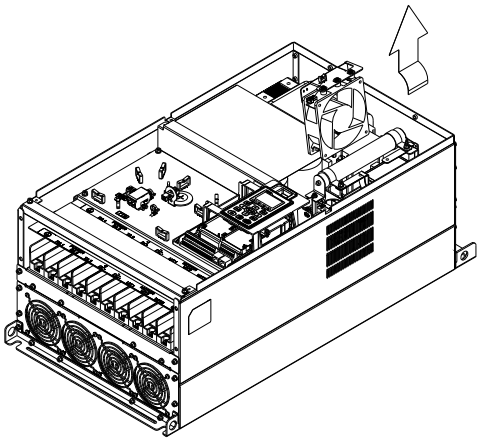

Figure 4

Frame G

Applicable model

VFD2200CP43A-00/21; VFD2800CP43A-00/21; VFD2500CP63A-00; VFD3150CP63A-00; VFD2500CP63A-21; VFD3150CP63A-21;

Fan model『MKC-GFKM』Heat Sink Fan

(1) Loosen the screw (figure 1) and remove the cover. Screw torque: 12~15 kg-cm / [10.4~13.1 lb-in.] / [1.2~1.5 Nm]

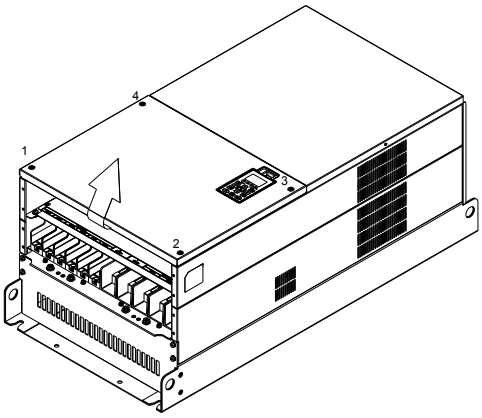


Figure 1

(2) For 1~8 shown in the figure 2: Loosen the screws Screw torque: 35~40 kg-cm / [30.4~34.7 lb-in.] / [3.4~3.9 Nm]

For 9~10 shown in the figure 2: Loosen the screws and removes the cover. Screw M4 torque: 14~16 kg-cm / [12.2~13.9 lb-in.] / [1.4~1.6 Nm]

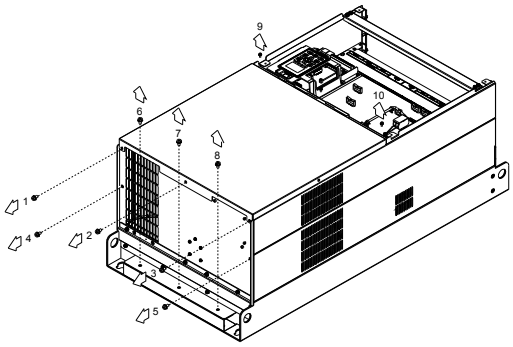


Figure 2

(3) Loosen screw 1,2,3 and remove the protective ring (as shown in figure 3) Screw torque: 14~16 kg-cm / [12.2~13.9 lb-in.] / [1.4~1.6 Nm]

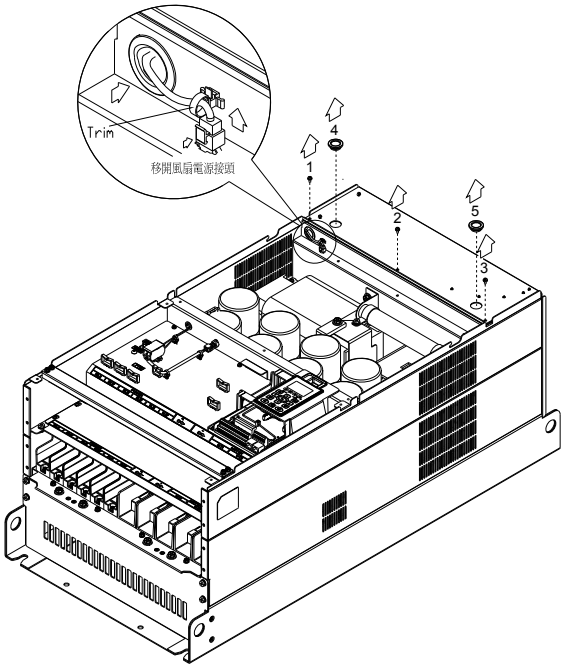


Figure 3

(4) Lift the fan by putting your finger through the protective holes, as indicates in 1 and 2 on the figure 4.

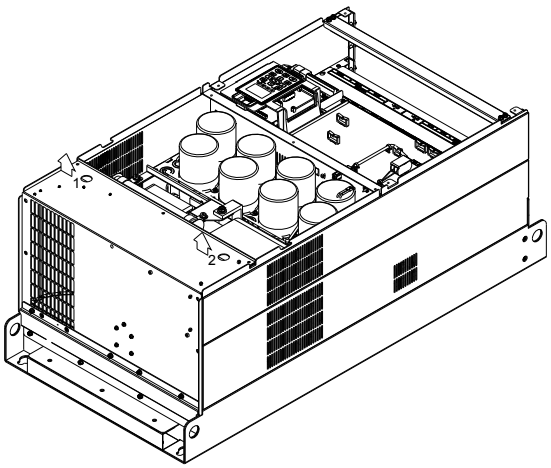


Figure 4

Frame H

Applicable model

VFD3150CP43A-00; VFD3150CP43C-00/21; VFD3550CP43A-00; VFD3550CP43C-00/21; VFD4000CP43A-00; VFD4000CP43C-00/21; VFD5000CP43A-00; VFD5000CP43C-00/21; VFD4000CP63A-00; VFD4500CP63A-00; VFD5600CP63A-00; VFD6300CP63A-00; VFD4000CP63A-21; VFD4500CP63A-21; VFD5600CP63A-21; VFD6300CP63A-21

Fan model 『MKC-HFKM』 Heat Sink Fan

(1) Loosen the screw and remove the top cover (figure 1)
Screw torque: 14~16 kg-cm / [12.2~13.9 lb-in.] / [1.4~1.6 Nm]

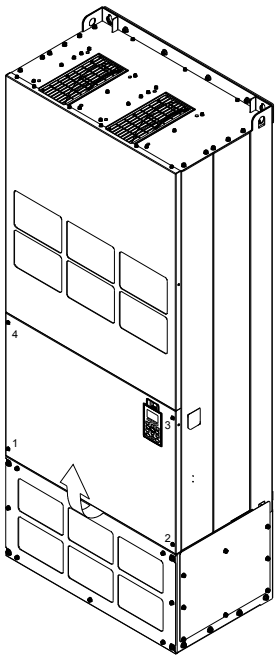


Figure 1

(2) Loosen the screw and remove the top cover (figure 2).
Screw torque: 24~26kg-cm / [20.8~22.6 lb-in.] / [2.4~2.5 Nm]

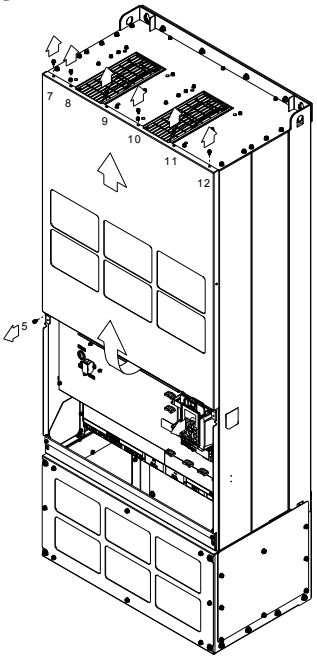


Figure 2

(3) Disconnect the fan (figure 3).

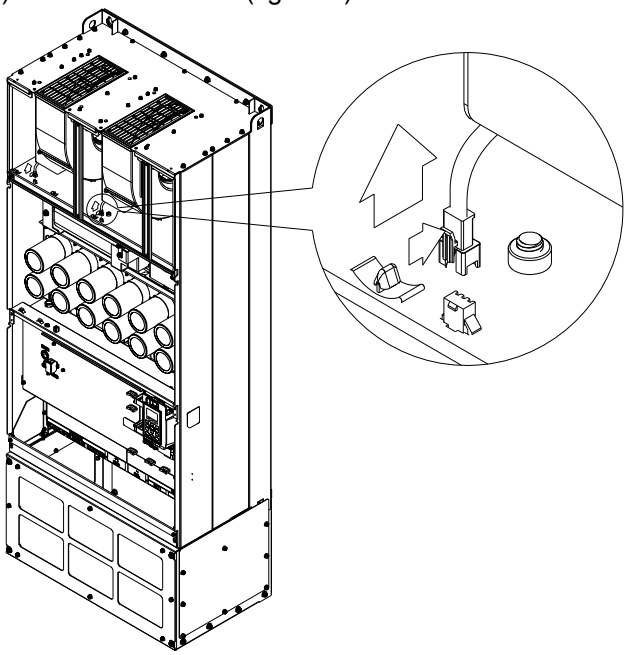

Figure 3

(4) Loosen the screw and remove the fan. Make sure fan power is properly disconnected before removal.
Screw torque: 24~26kg-cm / [20.8~22.6 lb-in.] / [2.4~2.5 Nm]

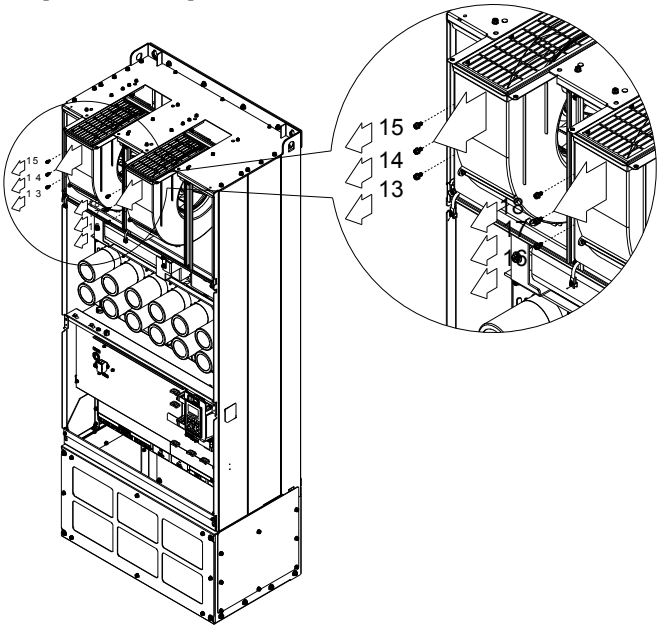


Figure 4

# 7-11 Flange Mounting Kit

Applicable Models, Frame A~F

Frame A

『MKC-AFM1』

Applicable model

VFD022CP23A-21; VFD022CP43B/4EB-21; VFD037CP23A-21; VFD015CP53A-21; VFD022CP53A-21; VFD037CP53A-21

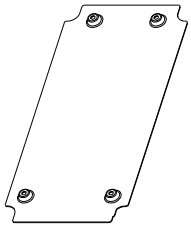

Accessories 1*1

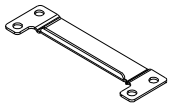

Accessories 2*2

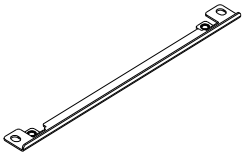

Accessories 3*2

Screw 1 *4
M3*P 0.5; L=6mm

Screw 2*8
M6*P 1.0; L=16mm

『MKC-AFM』

Applicable model

VFD007CP4EA-21; VFD015CP23A-21; VFD015CP43B/4EB-21; VFD022CP23A-21; VFD037CP43B/4EB-21; VFD055CP23A-21; VFD040CP43A/4EA-21; VFD055CP43B/4EB-21; VFD075CP43B/4EB-21

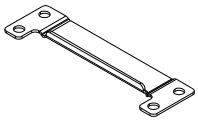

Accessory 2*2

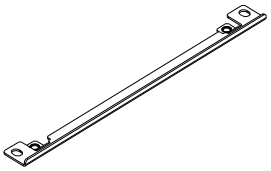

Accessory t 3*2

Screw *8
M6*P 1.0; L=16mm

Cutout dimension

Unit: mm [inch]

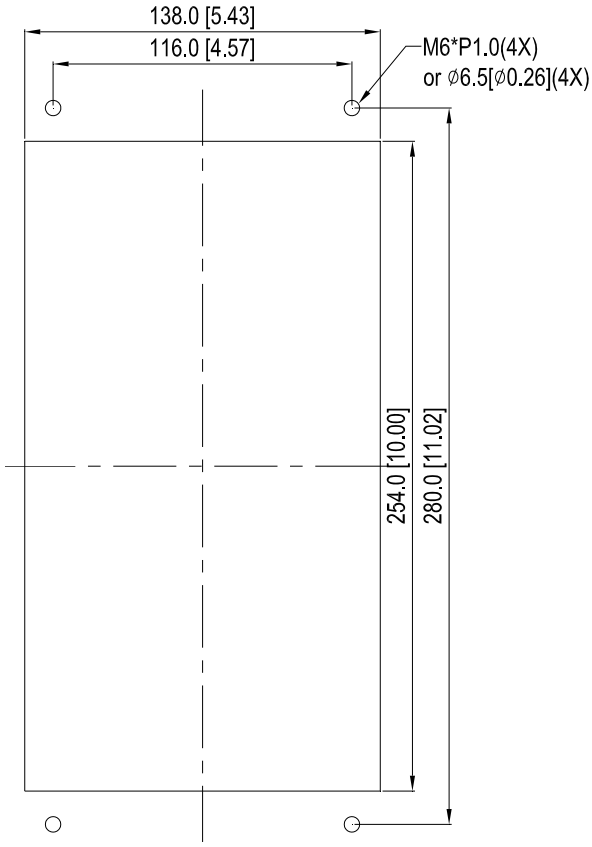


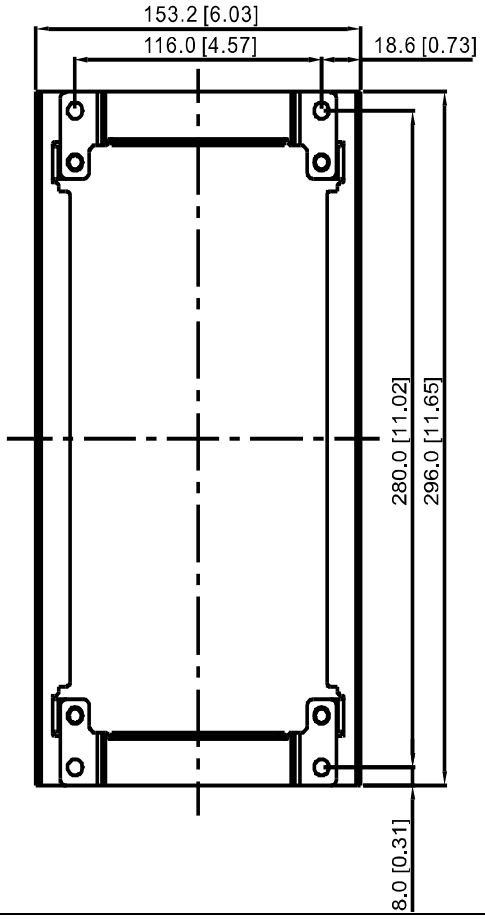

『MKC-AFM1』Installation

1. Install accessory 1 by fastening 4 of the screw 1(M3) (figure 1). Screw torque: 6~8 kg-cm / [5.21~6.94 lb-in.] / [0.6~0.8 Nm]

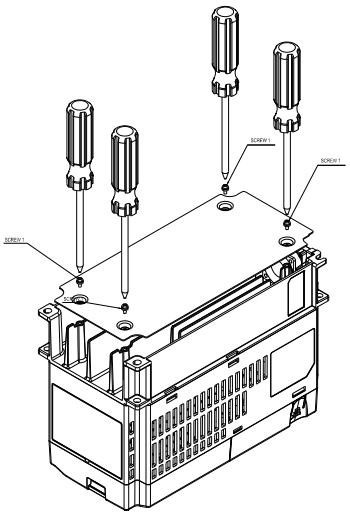


Figure 1

2. Install accessory 2&3 by fastening 2 of the screw 2(M6) (figure 2). Screw torque: 25~30 kg-cm / [21.7~26 lb-in.] / [2.5~2.9 Nm]

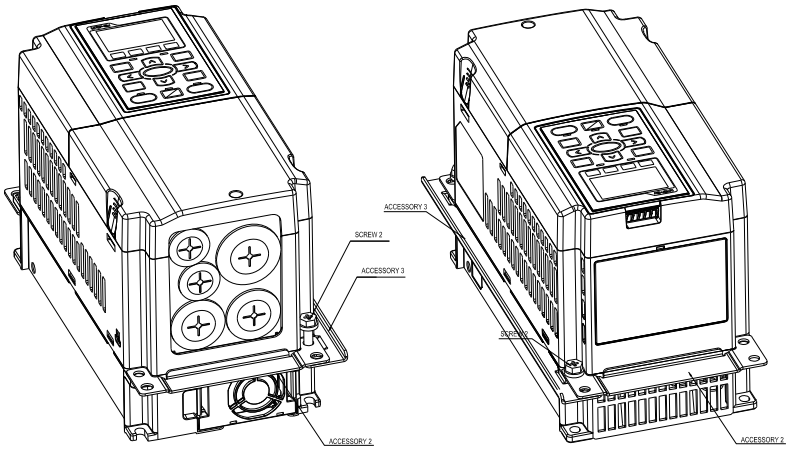


Figure 2

3. Install accessory 2&3 by fastening 2 of the screw 2(M6) (figure 3). Screw torque: 25~30 kg-cm / [21.7~26 lb-in.] / [2.5~2.9 Nm]

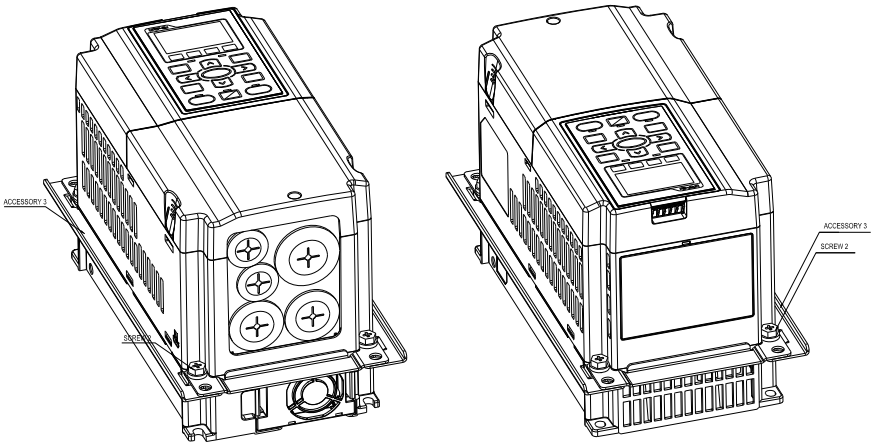


Figure 3

4. Plate installation, place 4 of the screw 2 (M6) (figure 4) through accessory 2&3 and the plate then fasten the screws. Screw torque: 25~30 kg-cm / [21.7~26 Ib-in.] / [2.5~2.9 Nm]

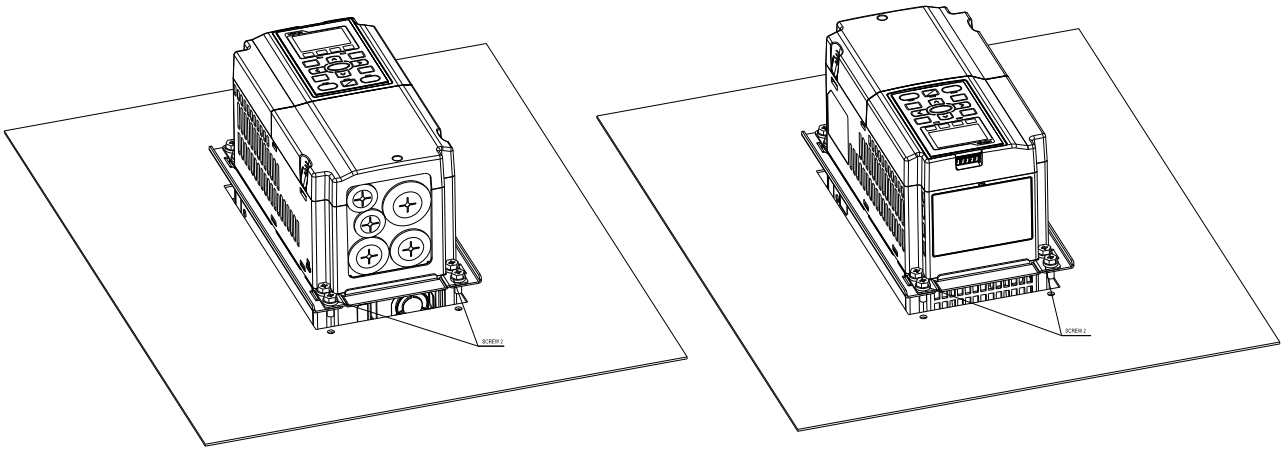


Figure 4

『MKC-AFM』 Installation

1. Fasten screw*2(M6) and accessory 2 &3. Screw torque: 25~30 kg-cm / [21.7~26 Ib-in.] / [2.5~2.9 Nm] (figure 1)

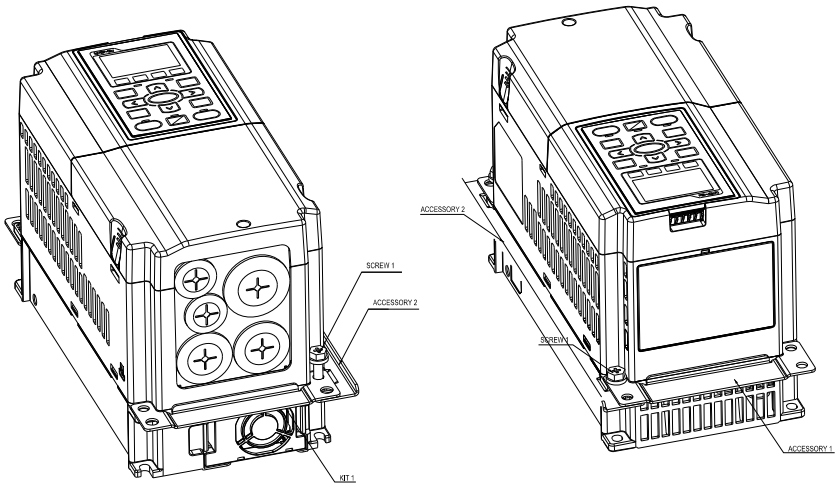


Figure 1

2. Fasten screw*2(M6) and accessory 2 &3. Screw torque: 25~30 kg-cm / [21.7~26 Ib-in.] / [2.5~2.9 Nm] (figure 2)

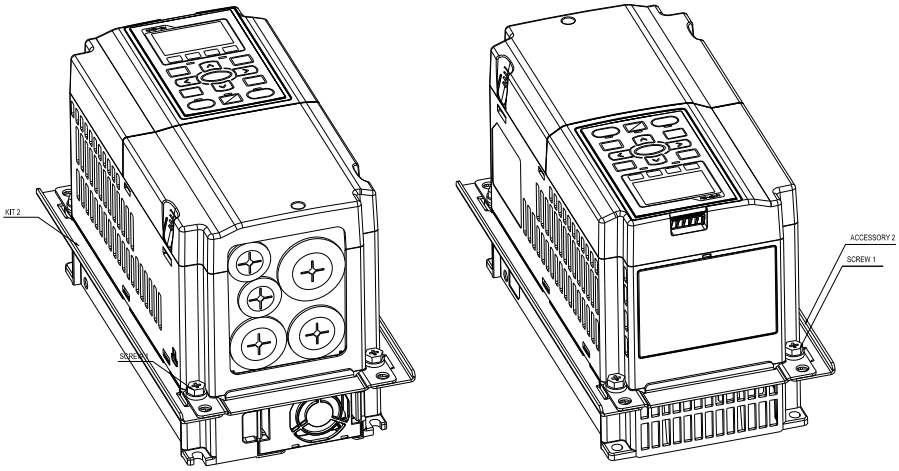


Figure 2

3. Plate installation, place 4 of the screw *4 (M6) through accessory 2&3 and the plate then fasten the screws. Screw torque: 25~30 kg-cm / [21.7~26 lb-in.] / [2.5~2.9 Nm] (figure 3)

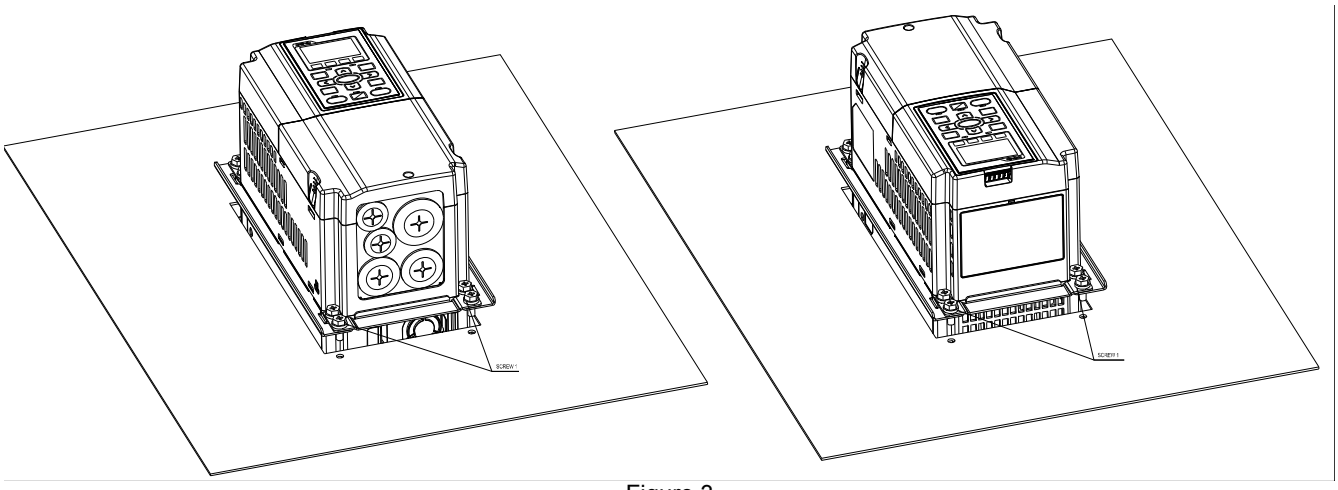


Figure 3

## Frame B

『MKC-BFM』

Applicable model

VFD075CP23A-21; VFD110CP23A-21; VFD110CP43B/4EB-21; VFD150CP23A-21; VFD150CP43B/4EB-21; VFD185CP43B/4EB-21;

VFD055CP53A-21; VFD075CP53A-21; VFD110CP53A-21; VFD150CP53A-21;

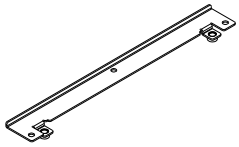

Accessory 1*2

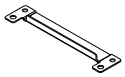

Accessory 2*2

Screw 1 *4 ~ M8*P 1.25;
Screw 2*6 ~ M6*P 1.0;

Cutout dimension

Unit: mm [inch]

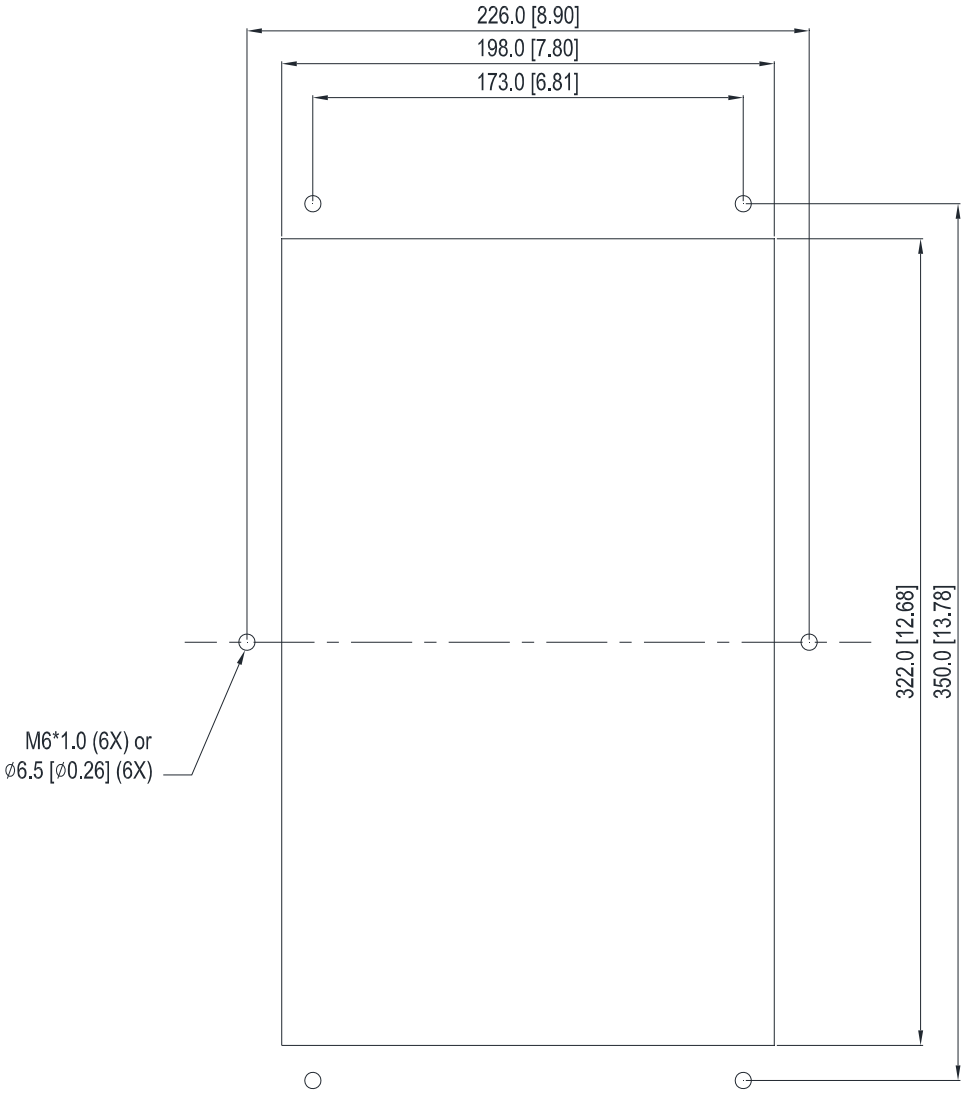

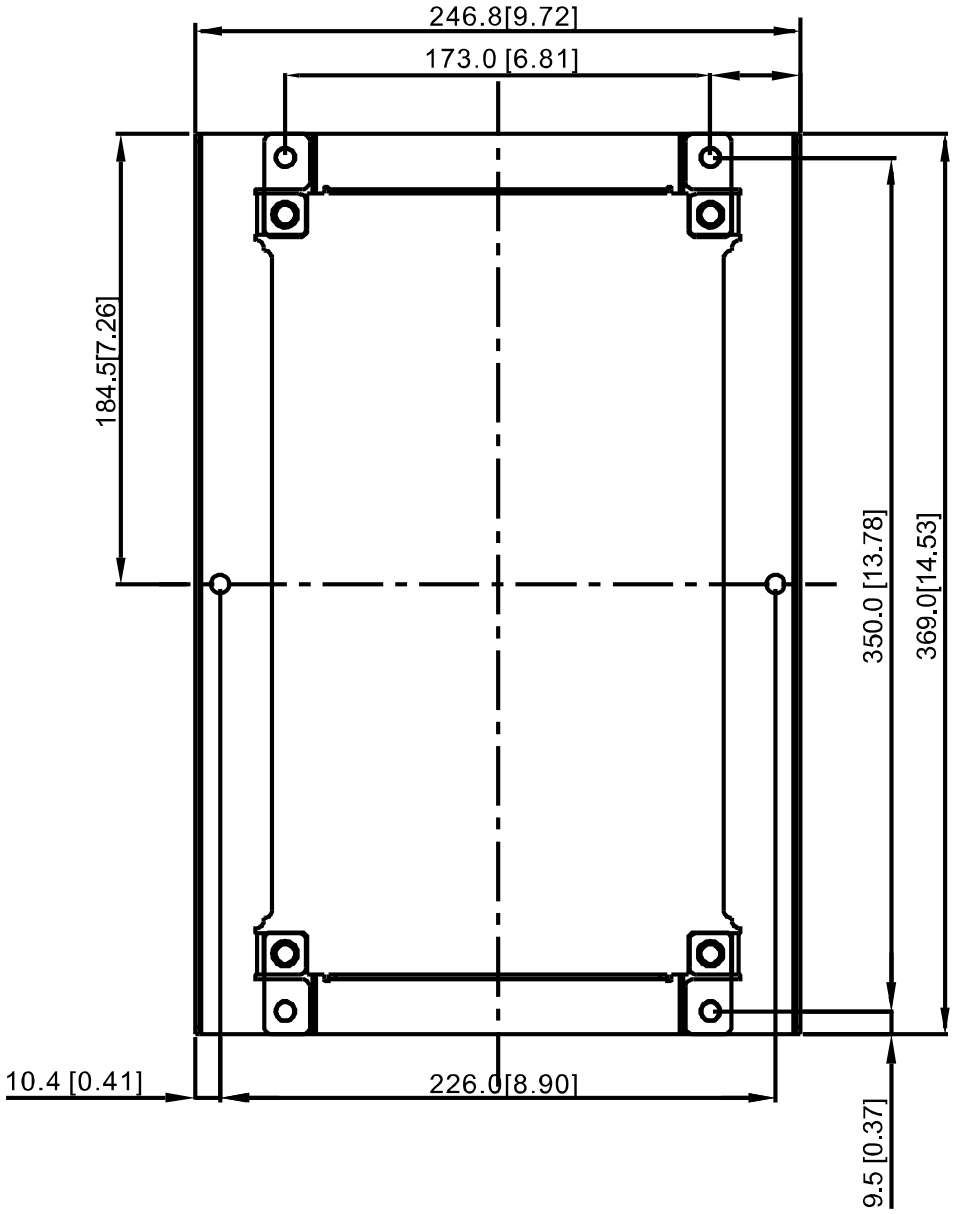
246.8[9.72]
173.0 [6.81]
184.5[7.26]
350.0 [13.78]
369.0[14.53]
10.4 [0.41]
226.0[8.90]
9.5 [0.37]

『MKC-BFM』Installation

1. Install accessory 1& 2 by fastening 4 of the screw 1(M8). Screw torque: 40~45 kg-cm / [34.7~39.0 lb-in.] / [3.9~4.4 Nm]
   (As shown in the following figure)

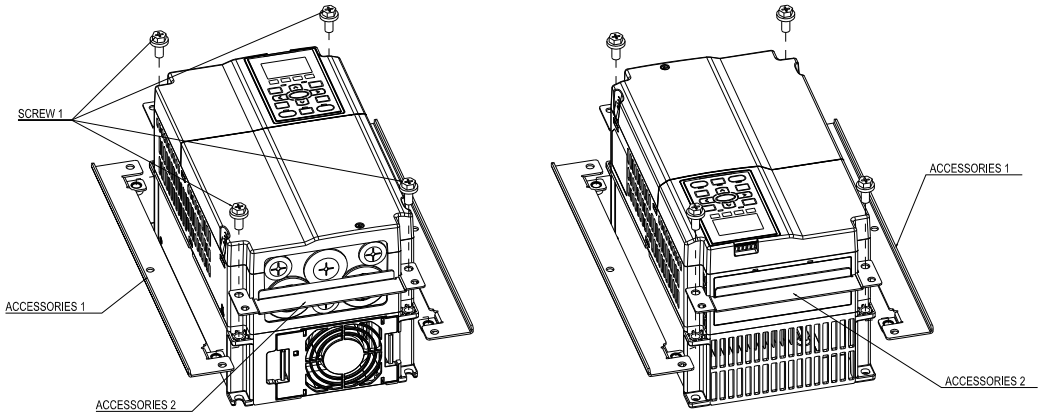


2. Plate installation, place 6 of the screw 2 (M6) through accessory 1&2 and the plate then fasten the screws. Screw torque: 25~30 kg-cm / [21.7~26 lb-in.] / [2.5~2.9 Nm] (As shown in the following figure)

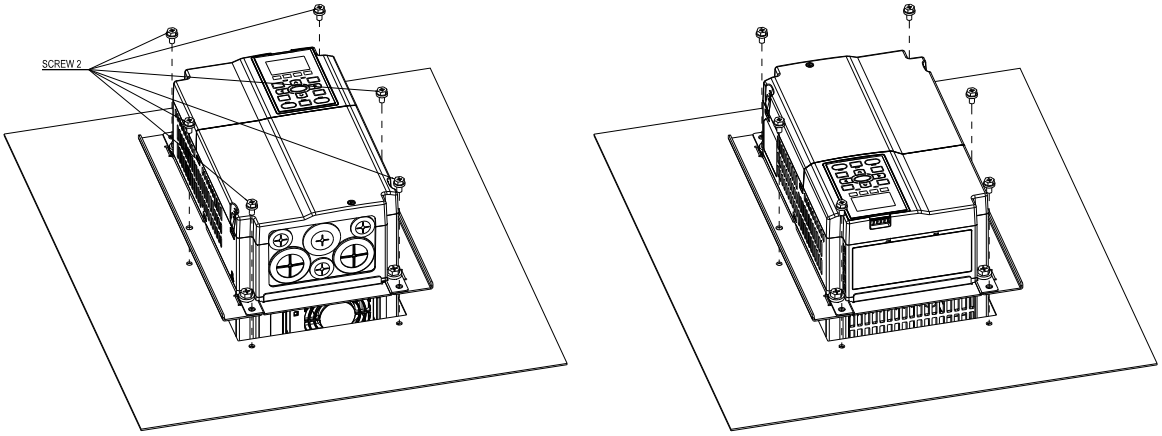

## Frame C

『MKC-CFM』

Applicable model

VFD185CP23A-21; VFD220CP23A-21; VFD220CP43A/4EA-21; VFD300CP23A-21; VFD300CP43B/4EB-21; VFD370CP43B/4EB-21;

VFD185CP63A-21; VFD220CP63A-21; VFD300CP63A-21; VFD370CP63A-21

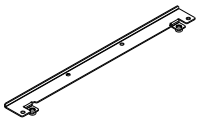

Accessory 1*2

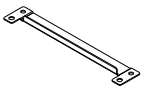

Accessory 2*2

Screw 1*4 ~ M8*P 1.25;
Screw 2*8 ~ M6*P 1.0;

Cutout dimension

Unit: mm [inch]

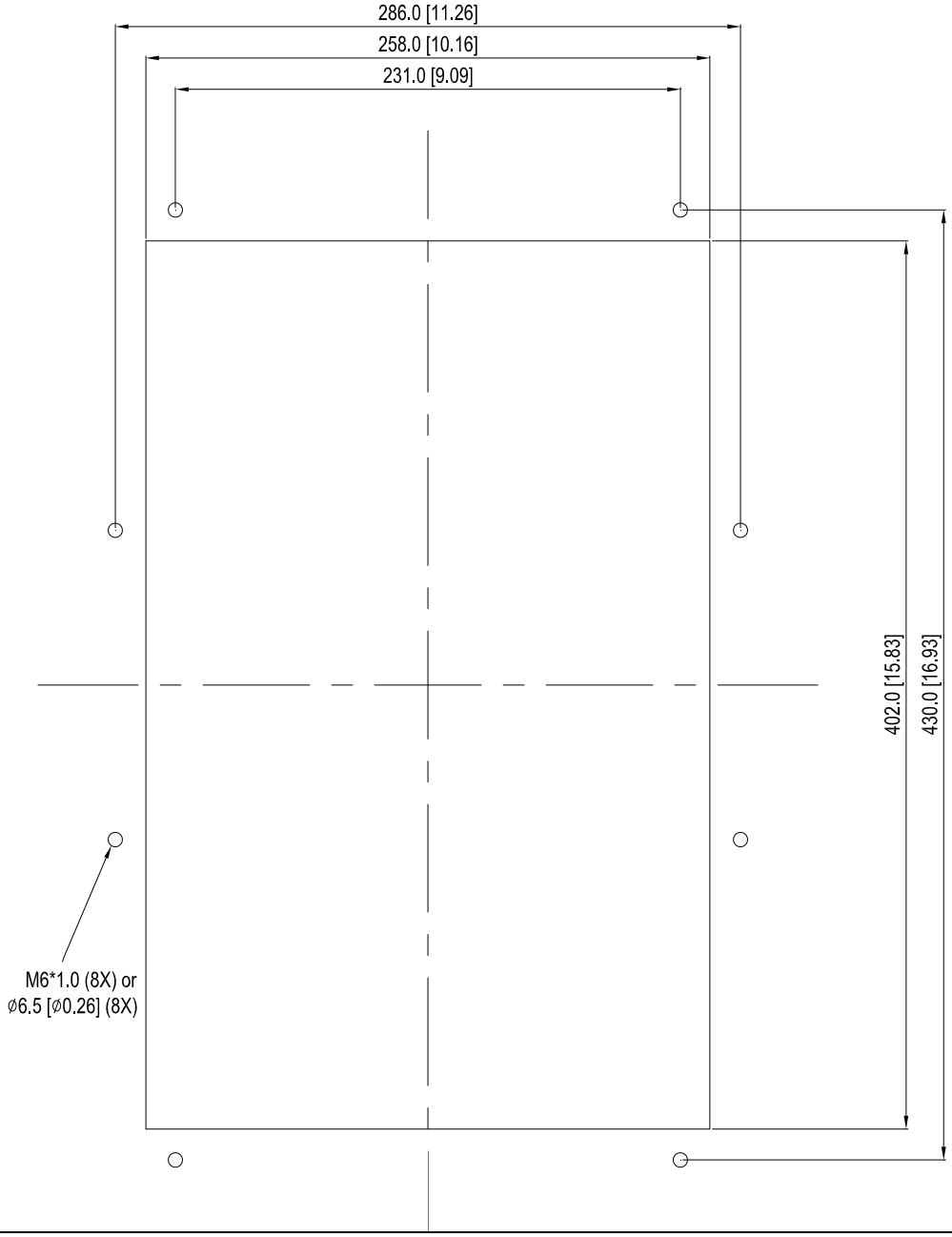

『MKC-CFM』Installation

1. Install accessory 1& 2 by fastening 4 of the screw 1(M8). Screw torque: 50~55 kg-cm / [43.4~47.7 lb-in.] / [4.9~5.4 Nm]
   (As shown in the following figure)

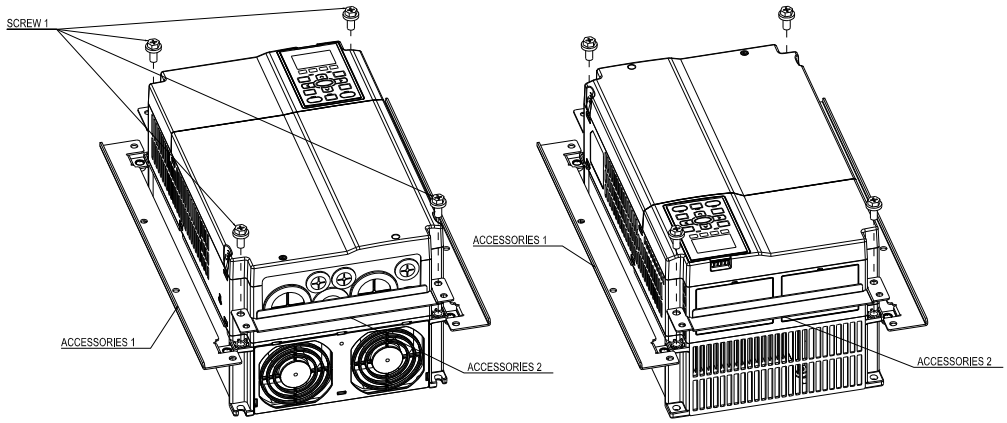


2. Plate installation, place 8 of the screw 2 (M6) through Accessory 1&2 and the plate then fasten the screws. Screw torque: 25~30 kg-cm / [21.7~26 lb-in.] / [2.5~2.9 Nm] (As shown in the following figure)

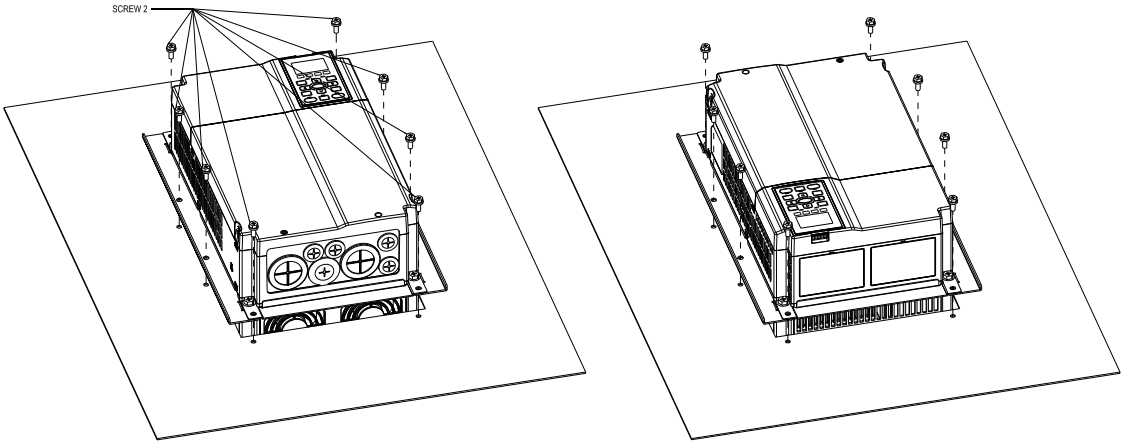

## Frame D0

Applicable model

VFD450CP43S-00/21; VFD550CP43S-00/21

Cutout dimension

Unit: mm [inch]

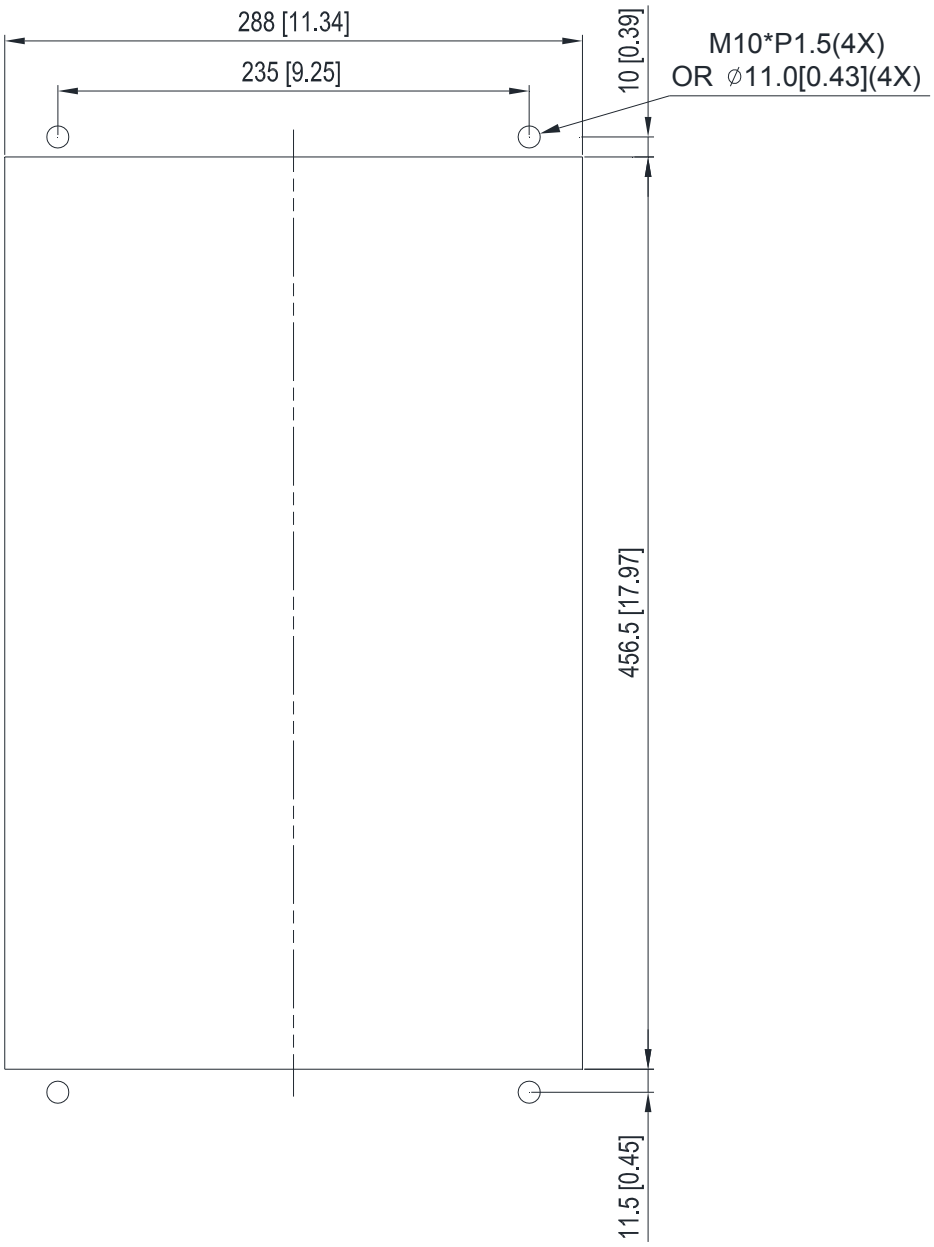

## Frame D

Applicable model

VFD370CP23A-00/21; VFD450CP23A-00/21; VFD450CP43A-00/21; VFD550CP43A-00/21; VFD750CP43B-00/21; VFD900CP43A-00/21; VFD450CP63A-00; VFD550CP63A-00; VFD450CP63A-21; VFD550CP63A-21

Cutout dimension Unit: mm [inch]

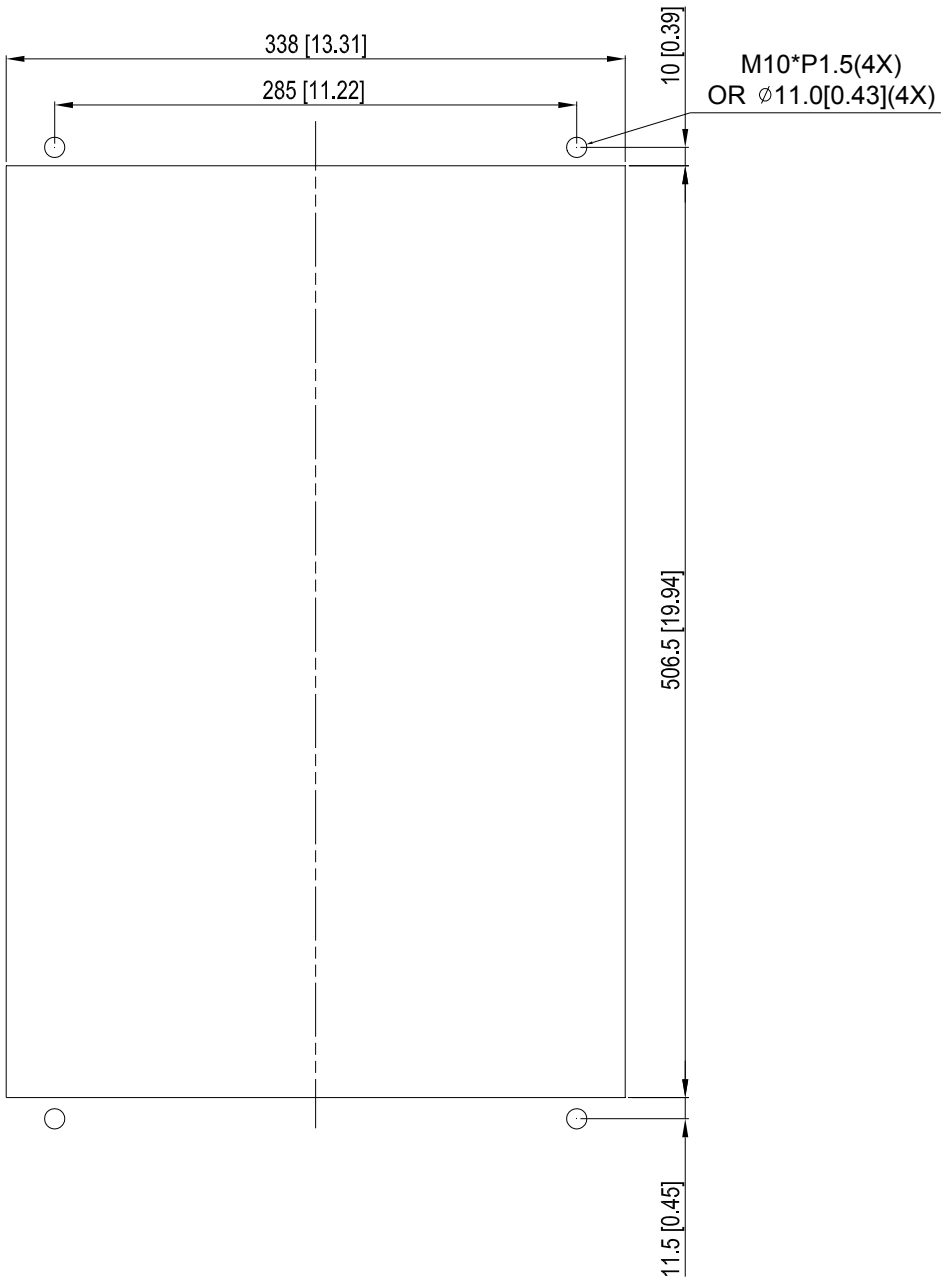

## Frame E

Applicable model

VFD550CP23A-00/21; VFD750CP23A-00/21; VFD900CP23A-00/21; VFD1100CP43A-00/21; VFD1320CP43B-00/21; VFD750CP63A-00; VFD900CP63A-00; VFD1100CP63A-00; VFD1320CP63A-00; VFD750CP63A-21; VFD900CP63A-21; VFD1100CP63A-21;

Cutout dimension Unit: mm [inch]

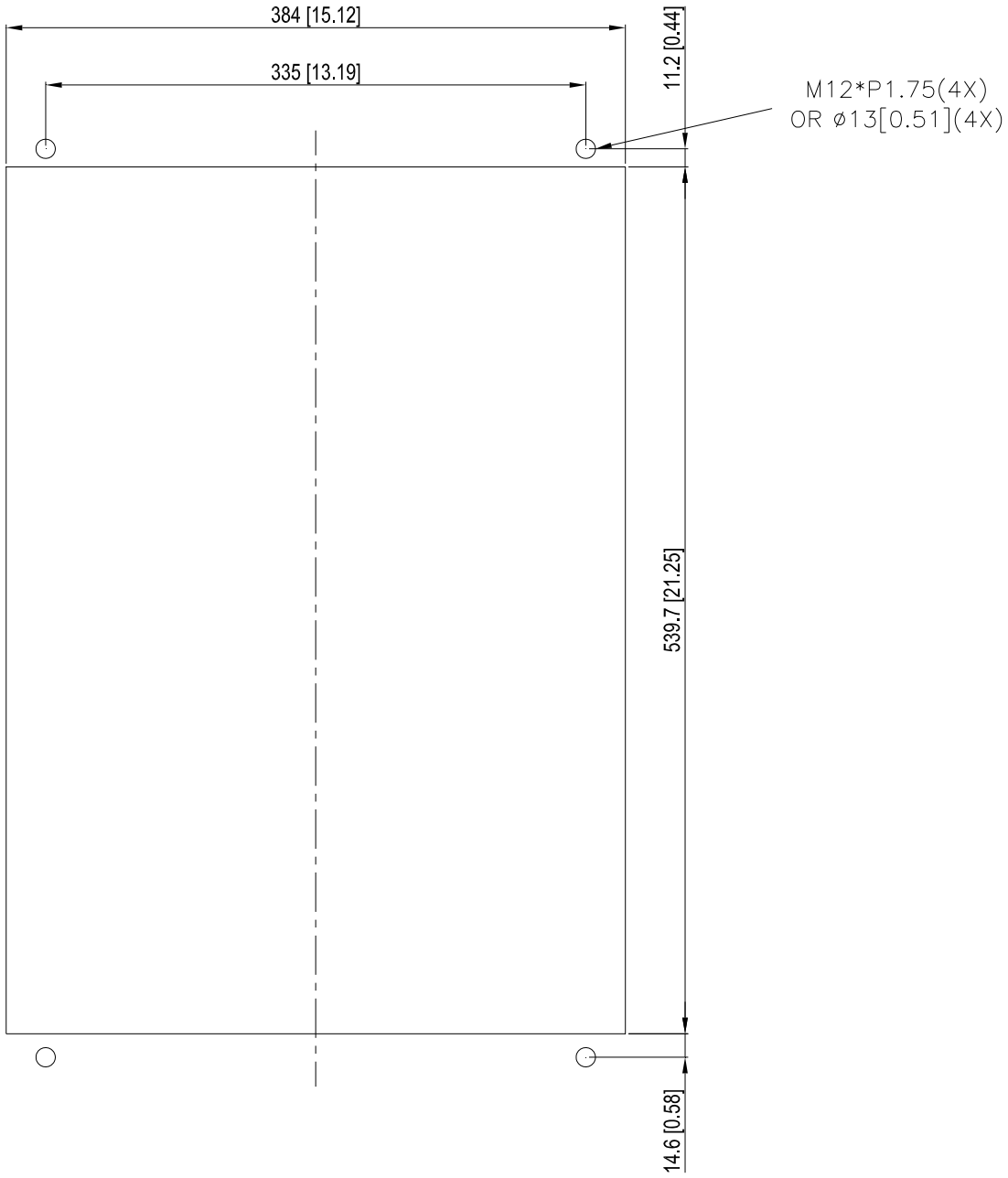

## Frame D0 & D & E

1. Loosen 8 screws and remove Fixture 2 (as shown in the following figure).

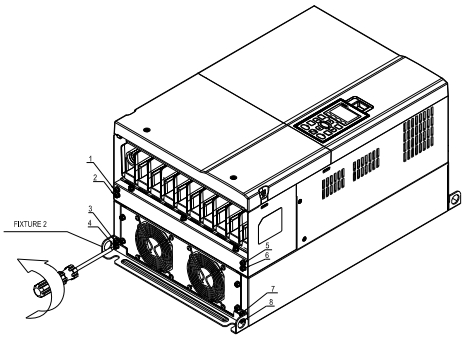


2. Loosen 10 screws and remove Fixture 1 (as shown in the following figure).

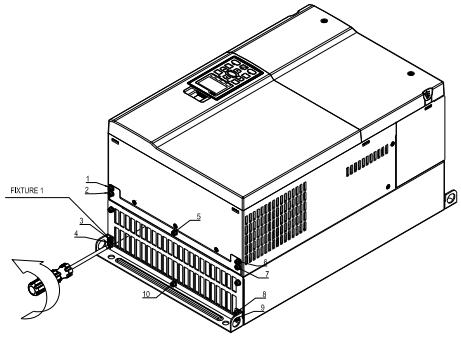


3. Fasten 4 screws (as shown in the following figure). Screw torque: 30~32 kg-cm / [26.0~27.8 Ib-in.] / [2.9~3.1 Nm]

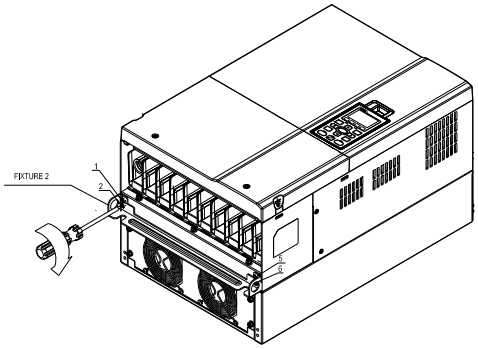


4. Fasten 5 screws (as shown in the following figure). Screw torque: 30~32 kg-cm / [26.0~27.8 Ib-in.] / [2.9~3.1 Nm]

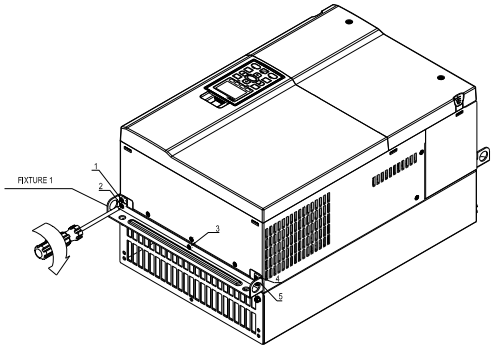


5. Fasten 4 screws (as shown in the following figure). Screw torque: 24~26 kg-cm / [20.8~22.6 Ib-in.] / [2.4~2.5 Nm]

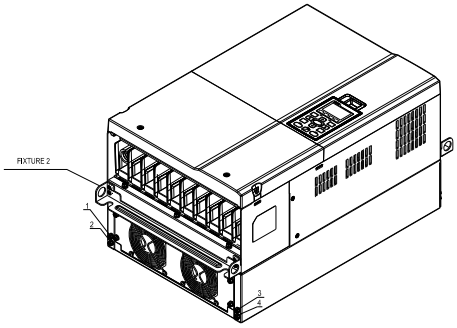


6. Fasten 5 screws (as shown in the following figure). Screw torque: 24~26 kg-cm / [20.8~22.6 Ib-in.] / [2.4~2.5 Nm]

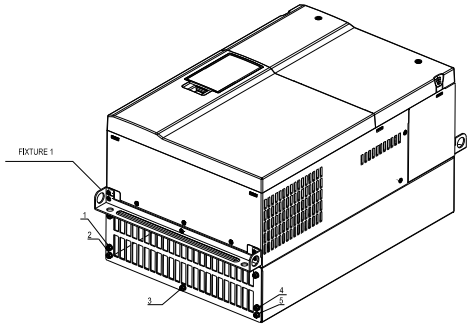


7. Place 4 screws (M10) through Fixture 1&2 and the plate then fasten the screws. (as shown in the following figure)

   Frame D0/D M10*4
   Screw torque: 200~240 kg-cm / [173.6~208.3 Ib-in.] / [19.6~235 Nm]

   Frame E M12*4
   Screw torque: 300~400 kg-cm / [260~347 Ib-in.] / [29.4~39.2 Nm]

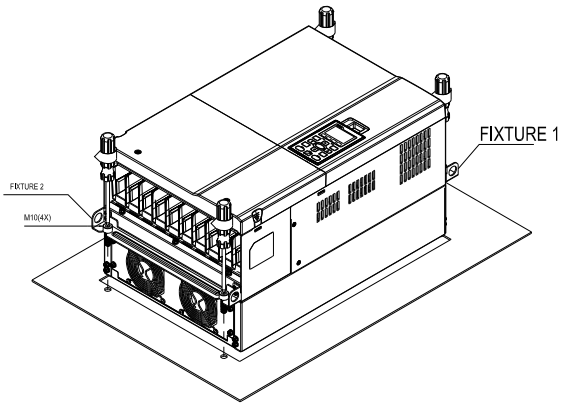

## Frame F

### Applicable model

VFD1600CP43A-00/21; VFD1850CP43B-00/21; VFD1600CP63A-00; VFD2000CP63A-00; VFD1600CP63A-21; VFD2000CP63A-21

### Cutout dimension

Unit: mm [inch]

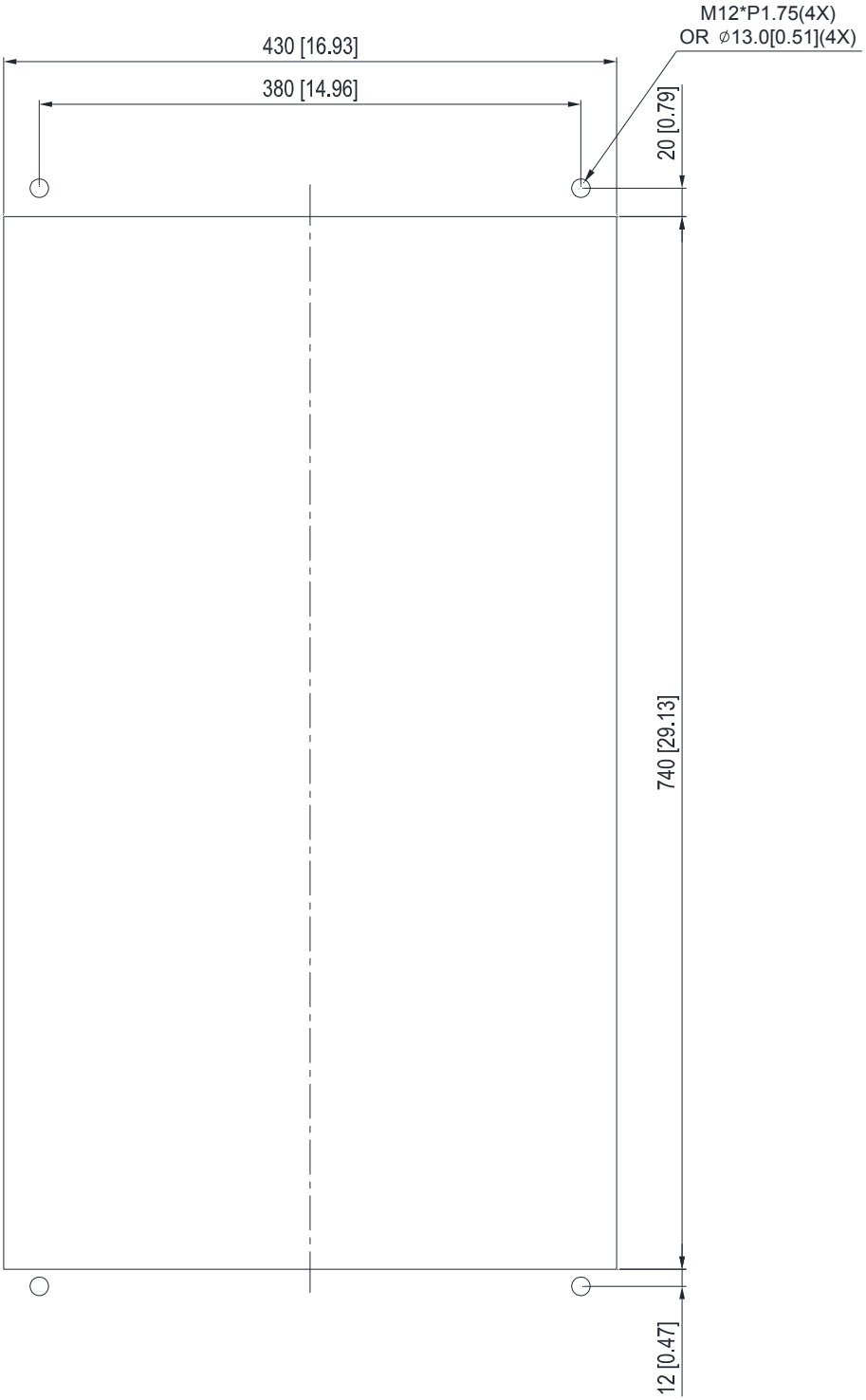

Frame F

1. Loosen 12 screws and remove Fixture 2.

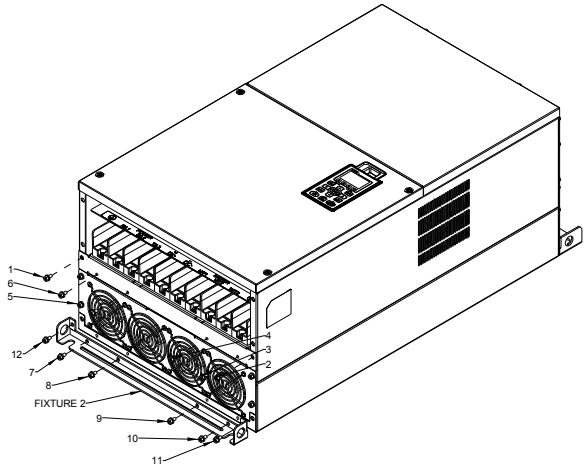


2. Loosen 12 screws and remove Fixture 2.
Screw torque: 24~26 kg-cm / [20.8~22.6 lb-in.] / [2.4~2.5 Nm]

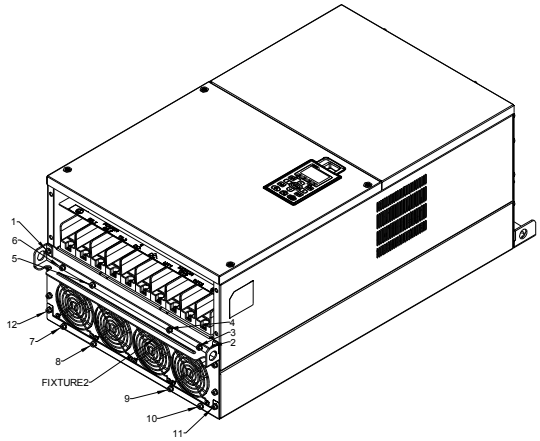


3. Loosen screw 13 ~26 and remove Fixture 1.

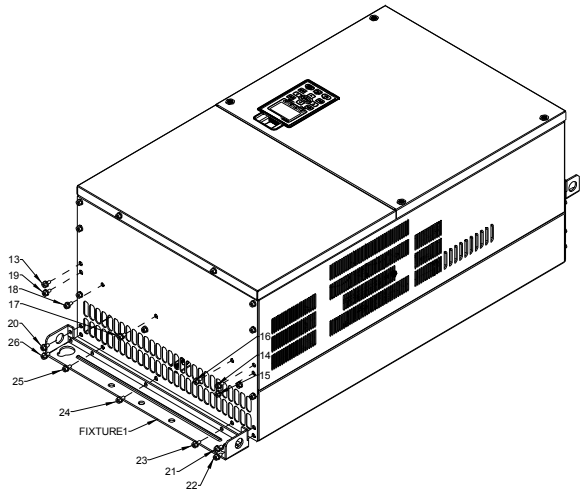


4. Install Fixture 1 by fasten screw 13 ~26
Screw torque: 24~26 kg-cm / [20.8~22.6 lb-in.] / [2.4~2.5 Nm]

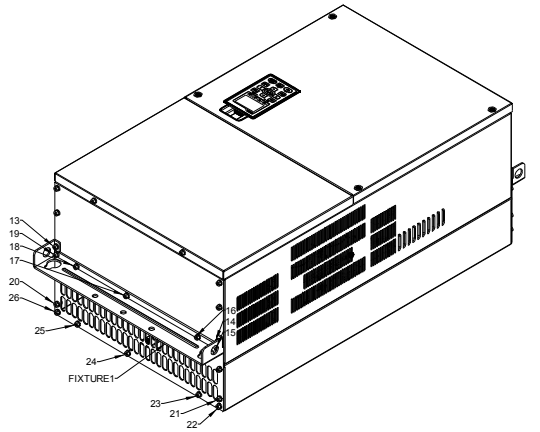


5. Place 4 of the M12 screws through Fixture 1&2 and plate then fasten the screws.
Screw torque: 300~400 kg-cm / [260~347 lb-in.] / [29.4~39.2 Nm]

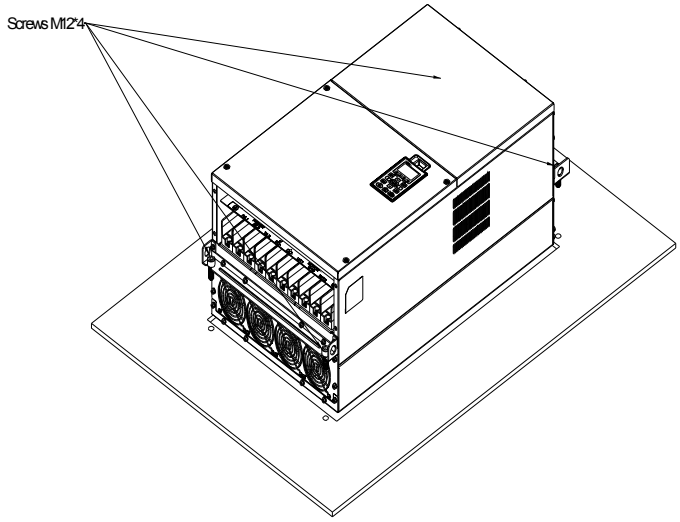

# 7-12 USB/RS-485 Communication Interface IFD6530

## ⚠ Warning

- ✓ *Please thoroughly read this instruction sheet before installation and putting it into use.*
- ✓ *The content of this instruction sheet and the driver file may be revised without prior notice. Please consult our distributors or download the most updated instruction/driver version at http://www.delta.com.tw/product/em/control/cm/control_cm_main.asp*

## 1. Introduction

IFD6530 is a convenient RS-485-to-USB converter, which does not require external power-supply and complex setting process. It supports baud rate from 75 to 115.2kbps and auto switching direction of data transmission. In addition, it adopts RJ-45 in RS-485 connector for users to wire conveniently. And its tiny dimension, handy use of plug-and-play and hot-swap provide more conveniences for connecting all DELTA IABU products to your PC.

Applicable Models: All DELTA IABU products.

(Application & Dimension)

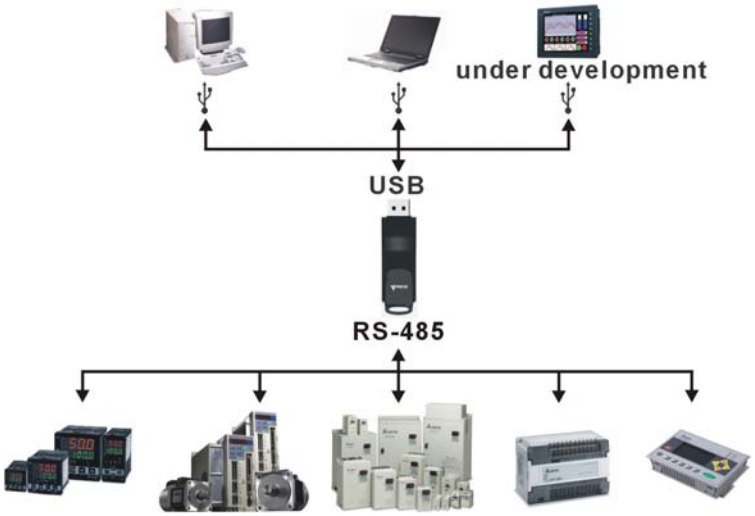


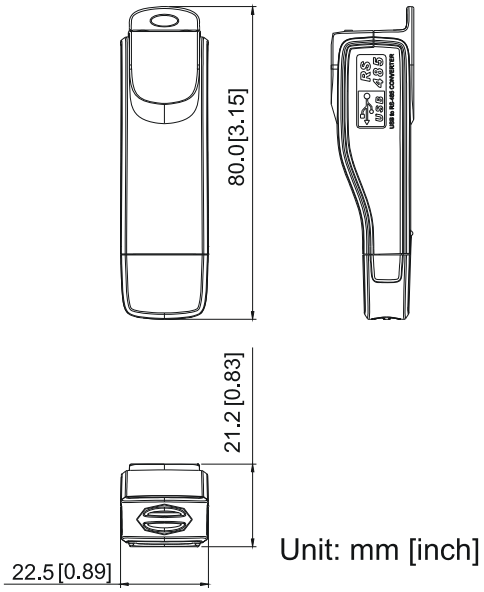


## 2. Specifications

| | |
|---|---|
| Power supply | No external power is needed |
| Power consumption | 1.5W |
| Isolated voltage | 2,500VDC |
| Baud rate | 75, 150, 300, 600, 1,200, 2,400, 4,800, 9,600, 19,200, 38,400, 57,600, 115,200 bps |
| RS-485 connector | RJ-45 |
| USB connector | A type (plug) |
| Compatibility | Full compliance with USB V2.0 specification |
| Max. cable length | RS-485 Communication Port: 100 m |
| Support RS-485 half-duplex transmission | |

■ **RJ-45**

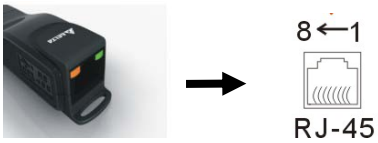


| PIN | Description |
|---|---|
| 1 | Reserved |
| 2 | Reserved |
| 3 | GND |
| 4 | SG- |

| PIN | Description |
|---|---|
| 5 | SG+ |
| 6 | GND |
| 7 | Reserved |
| 8 | +9V |

## 3. Preparations before Driver Installation

Please extract the driver file (IFD6530_Drivers.exe) by following steps. You could find driver file (IFD6530_Drivers.exe) in the CD supplied with IFD6530.

✐**Note:** DO NOT connect IFD6530 to PC before extracting the driver file.

**STEP 1**

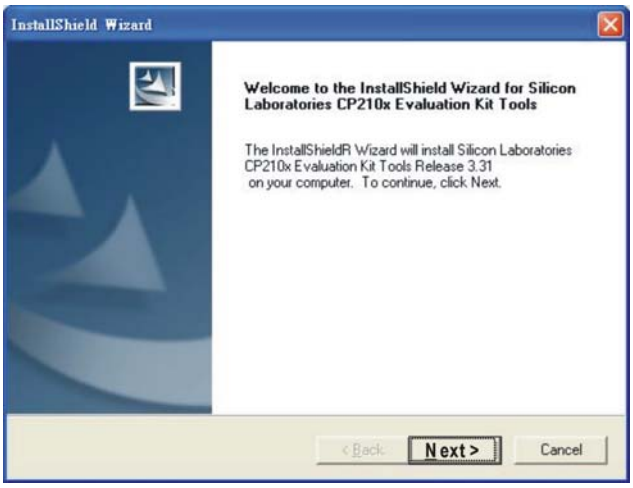


**STEP 2**

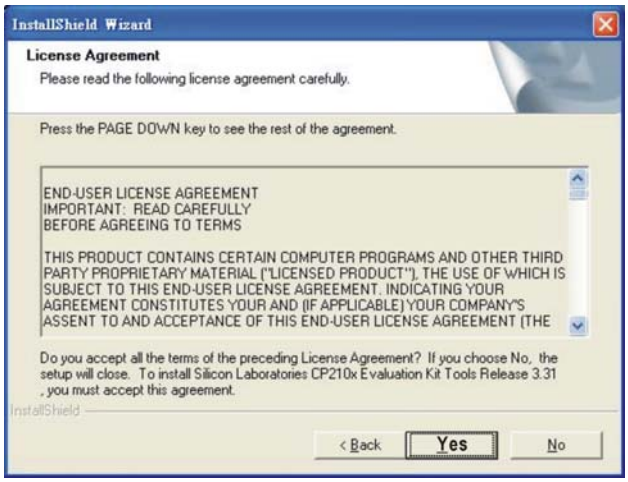


**STEP 3**

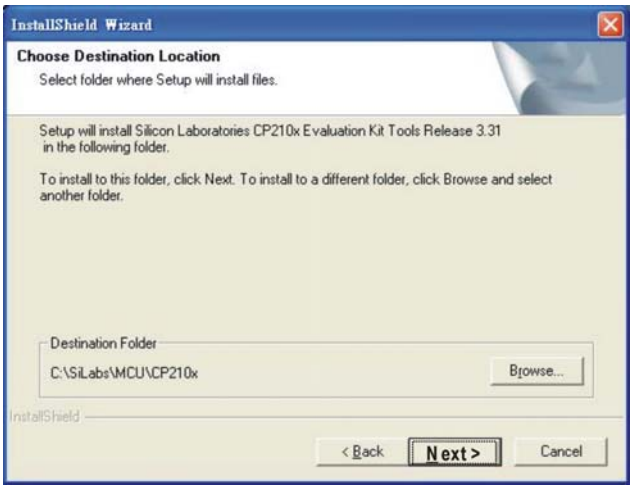


**STEP 4**

**STEP 5**

You should have a folder marked SiLabs under drive C. c:\ SiLabs

## 4. Driver Installation

After connecting IFD6530 to PC, please install driver by following steps.

STEP 1

STEP 2

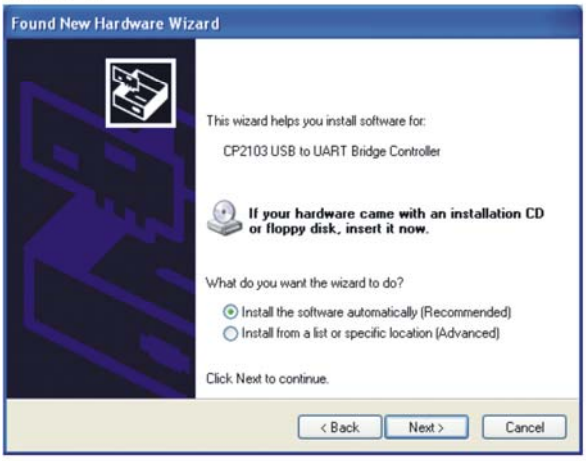


OR

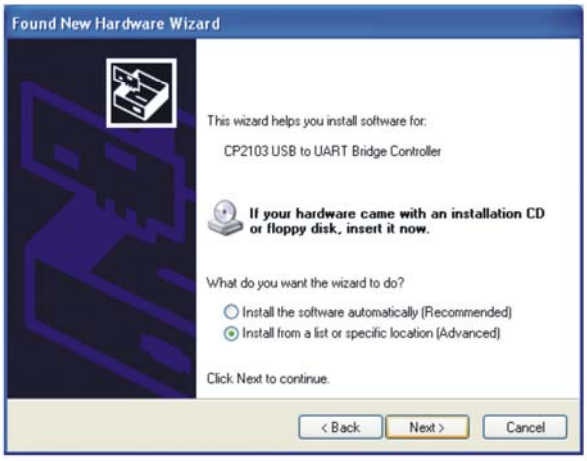


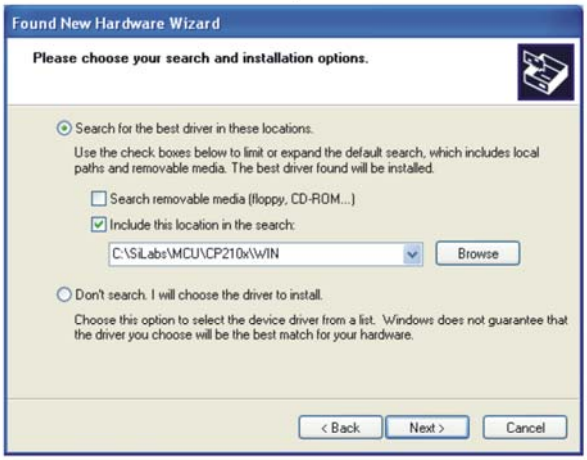


Browse and select directory, or enter C:\SiLabs\MCU\CP210x\WIN

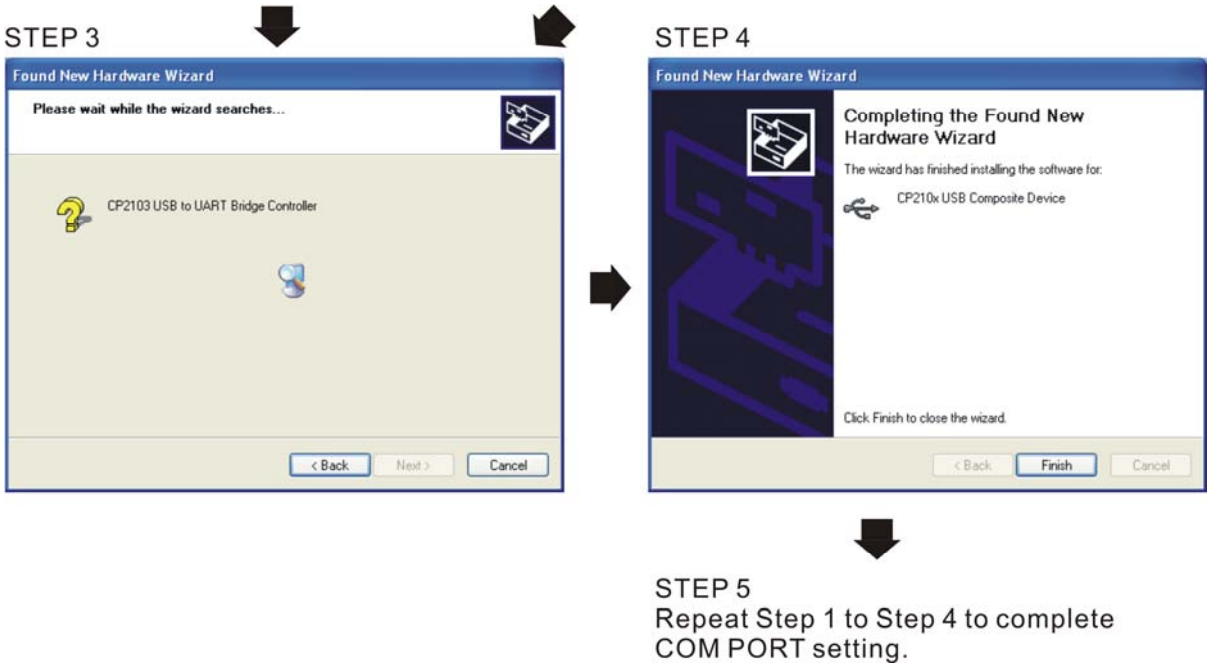


## 5. LED Display

1. Steady Green LED ON: power is ON.
2. Blinking orange LED: data is transmitting.

[This page intentionally left blank]

# *Chapter 8 Option Cards*

8-1 Optional Card Installation

8-2 EMC-D42A (I/O Extension Card)

8-3 EMC-D611A (I/O Extension Card)

8-4 EMC-R6AA (Relay Extension Card)

8-5 CMC-MOD01 (Communication Extension Card)

8-6 CMC-PD01 (Communication Extension Card)

8-7 CMC-DN01 (Communication Extension Card)

8-8 CMC-EIP01

8-9 EMC-COP01 (Communication Extension Card)

8-10 EMC-BPS01 (24V Power Extension Card)

Please select applicable option cards for your drive or contact local distributor for suggestion. To prevent drive damage during installation, please removes the digital keypad and the cover before wiring. Refer to the following instruction.

## 8-1 Optional Card Installation

### 8-1-1 Remove the top cover

Frame A~C
Screw Torque: 8~10kg-cm / [6.9~8.7lb-in.] / [0.8~1.0 Nm]

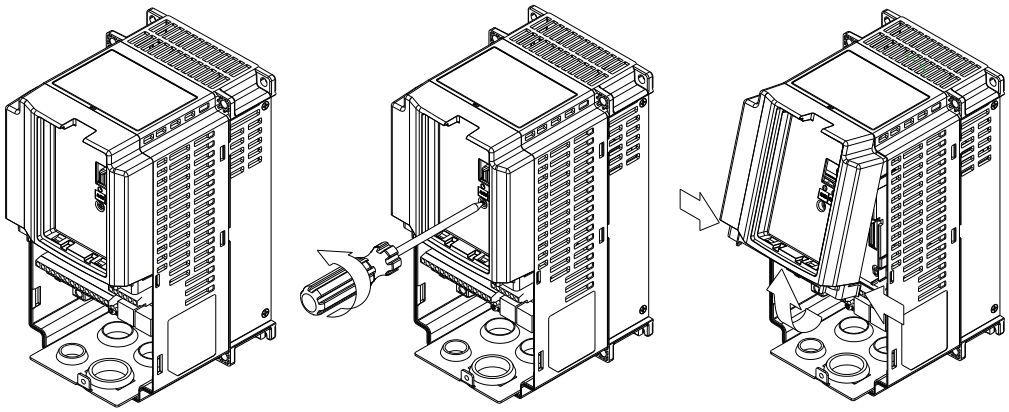

Frame D0
Screw Torque: 8~10Kg-cm / [6.9~8.7lb-in.] / [0.8~1.0 Nm]

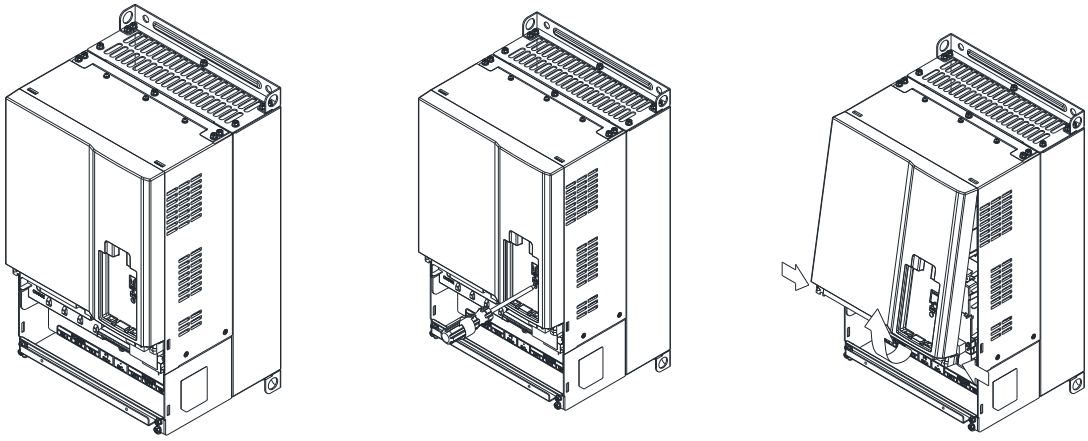

Frame D
Screw Torque: 8~10kg-cm / [6.9~8.7lb-in.] / [0.8~1.0 Nm]

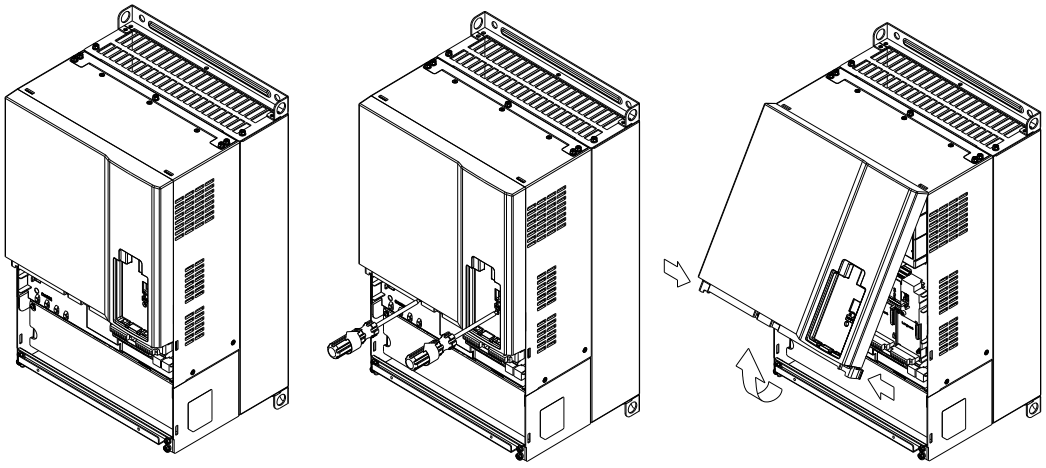

Frame E
Screw Torque: 12~15Kg-cm / [10.4~13lb-in.] / [1.2~1.5 Nm]

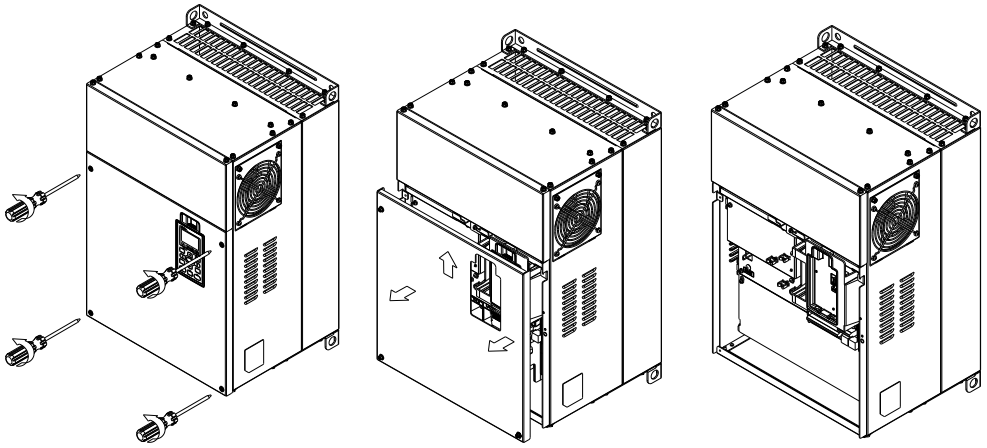

Frame F
Screw Torque: 12~15Kg-cm / [10.4~13lb-in.] / [1.2~1.5 Nm]

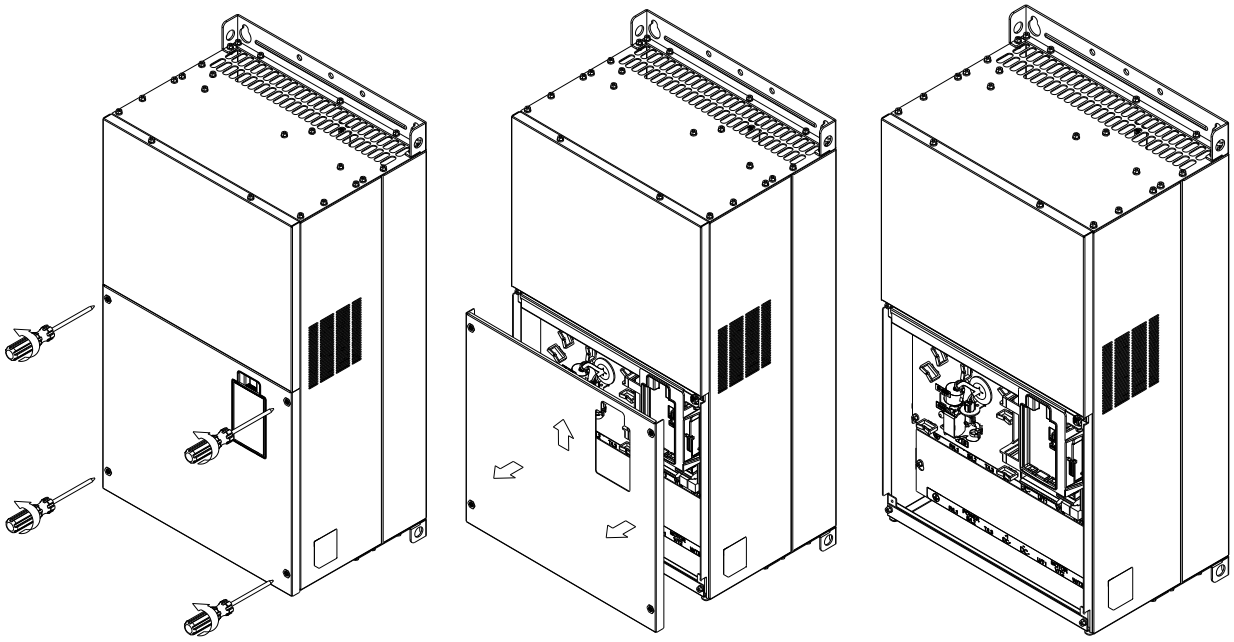

Frame G
Screw Torque: 12~15Kg-cm / [10.4~13lb-in.] / [1.2~1.5 Nm]

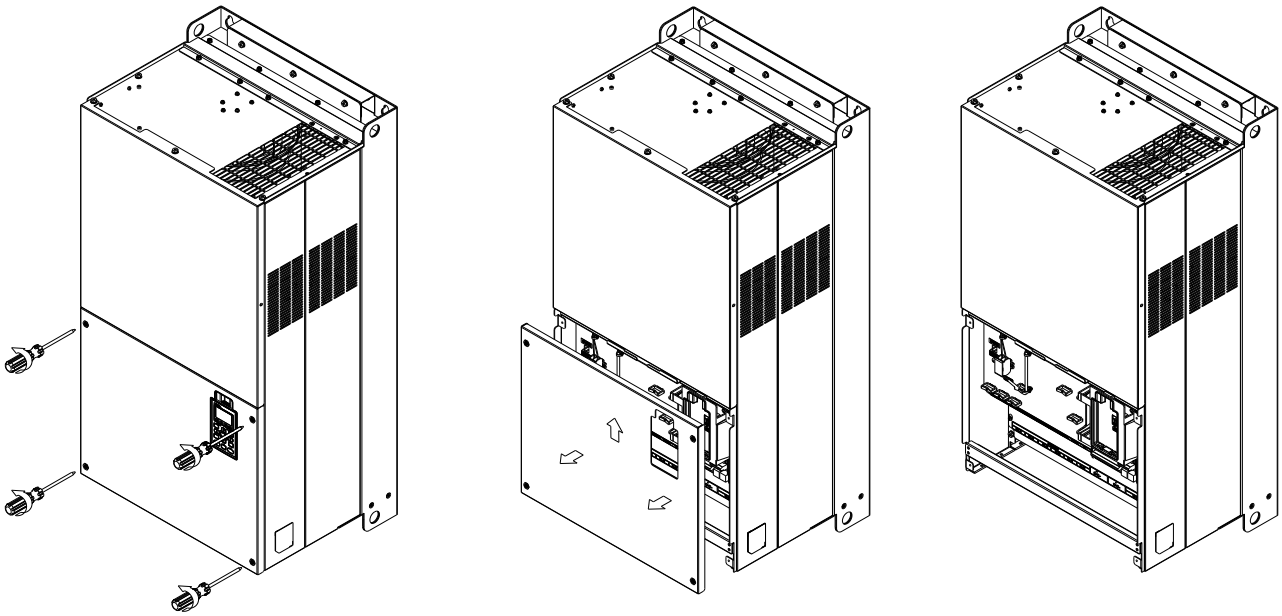

Frame H
Screw Torque: 14~16kg-cm / [12.15~13.89lb-in.] / [1.4~1.6 Nm]

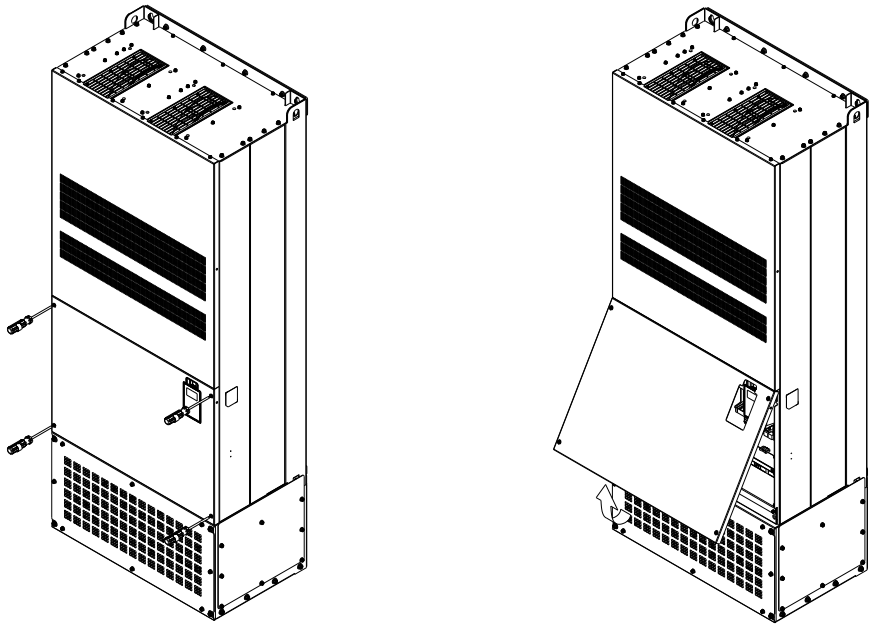

## 8-1-2 Location to Install Extension Card

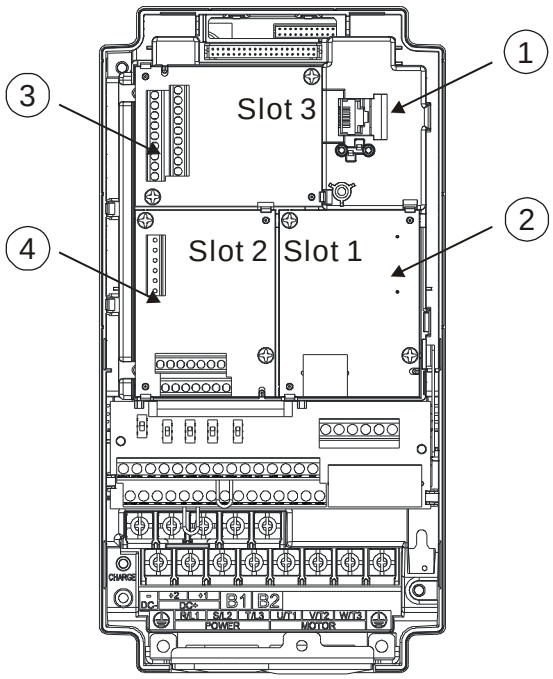


| | |
|---|---|
| 1 | RJ45 (Socket) for digital keypad<br>KPC-CC01; KPC-CE01<br>1. Please refer to Ch.10 Digital Keypad for more details on KPC-CC01.<br>2. Please refer to Ch.10 Digital Keypad for more details on optional accessory RJ45 extension cable. |
| 2 | Communication extension card (Slot 1)<br>1. CMC-MOD01<br>2. CMC-PD01<br>3. CMC-DN01<br>4. CMC-EIP01<br>5. EMC-COP01 |
| 3 | I/O & Relay extension card (Slot 3)<br>1. EMC-D42A<br>2. EMC-D611A<br>3. EMC-R6AA<br>4. EMC-BPS01 |
| 4 | PG Card (Slot 2)<br>※CP2000 don't support PG card. |

Screws Specification for option card terminals:

| | | |
|---|---|---|
| EMC-D42A; EMC-D611A; EMC-BPS01 | Wire gauge | 24~12AWG [0.205~3.31mm$^2$] |
| | Torque | 5kg-cm / [4.4 Ib-in.] / [0.5Nm] |
| EMC-R6AA | Wire gauge | 26~16AWG [0.128~1.31mm$^2$] |
| | Torque | 8kg-cm / [7 Ib-in.] / [0.8Nm] |

Communication extension card (Slot 1)

CMC-PD01

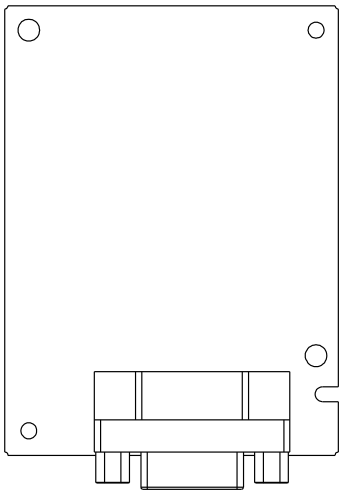

CMC-DN01

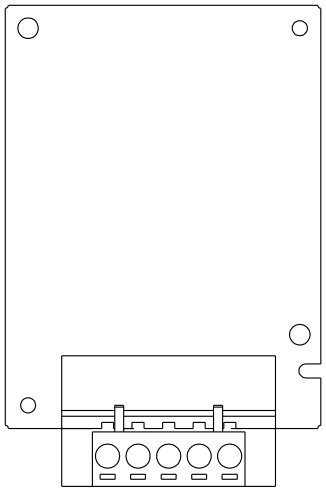

CMC-MOD01/ CMC-EIP01

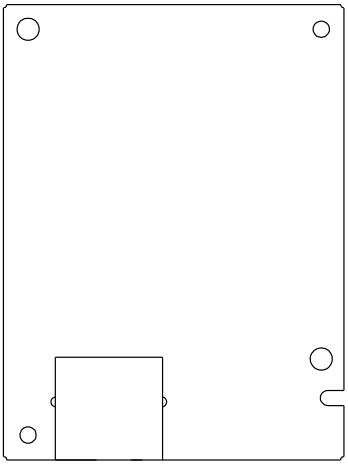

EMC-COP01

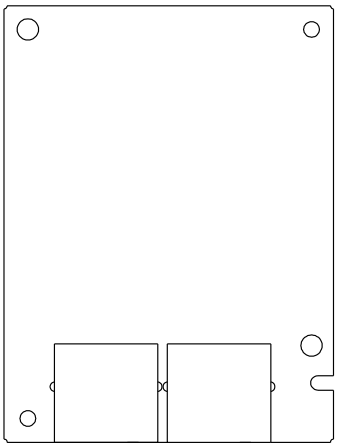

I/O / Relay extension card & 24V Power extension card (Slot 3)

EMC-D42A

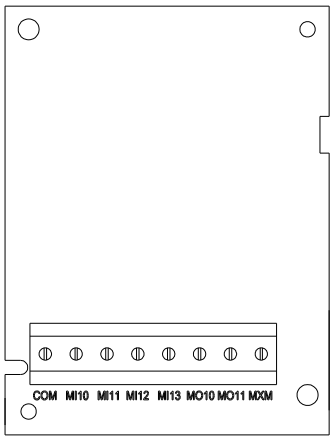


EMC-R6AA

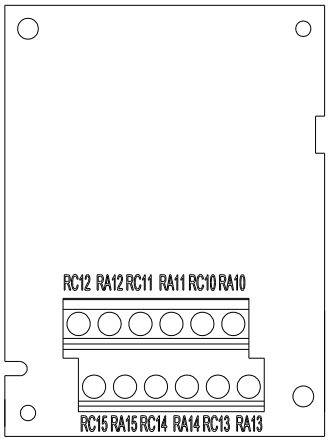

| | |
|---|---|
| EMC-BPS01<br> 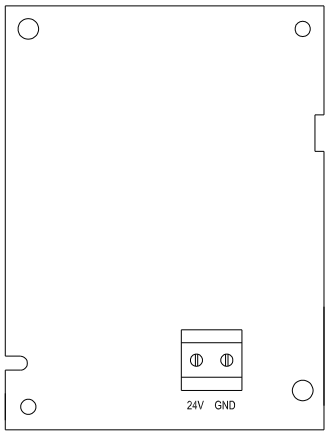 <br> | EMC-D611A<br> 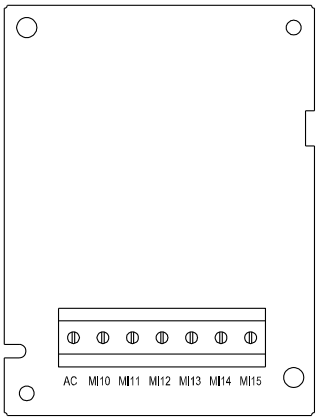 <br> |

## 8-1-3 Install and Uninstall of Extension Cards (i.e. communication card installation)

8-1-3-1 Installation

Extension Card installation

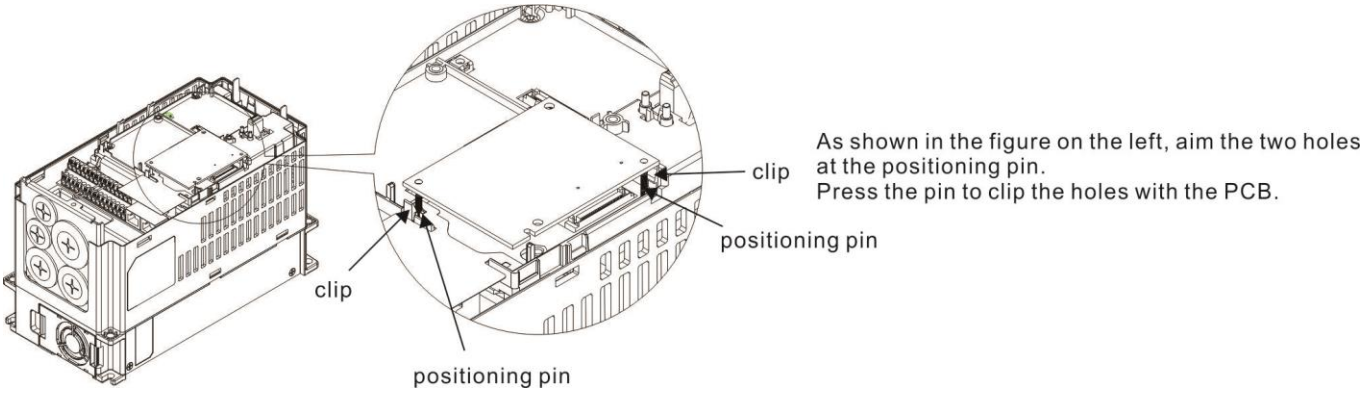


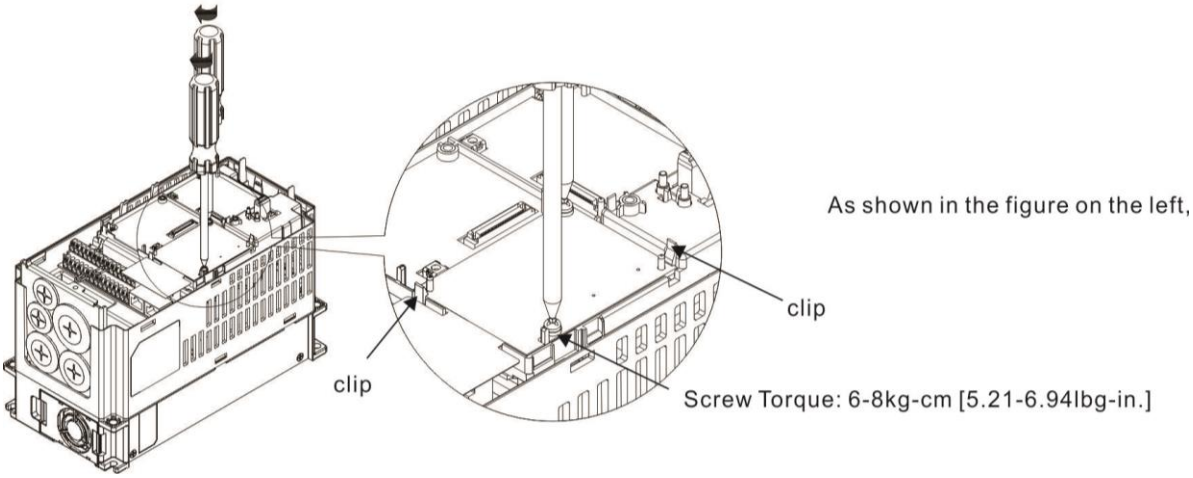


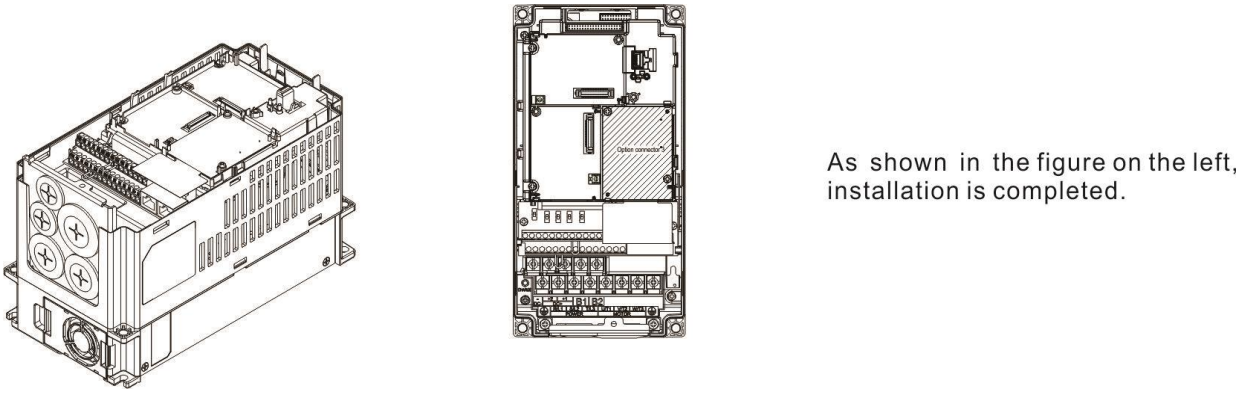

8-1-3-2 Disconnecting the extension card

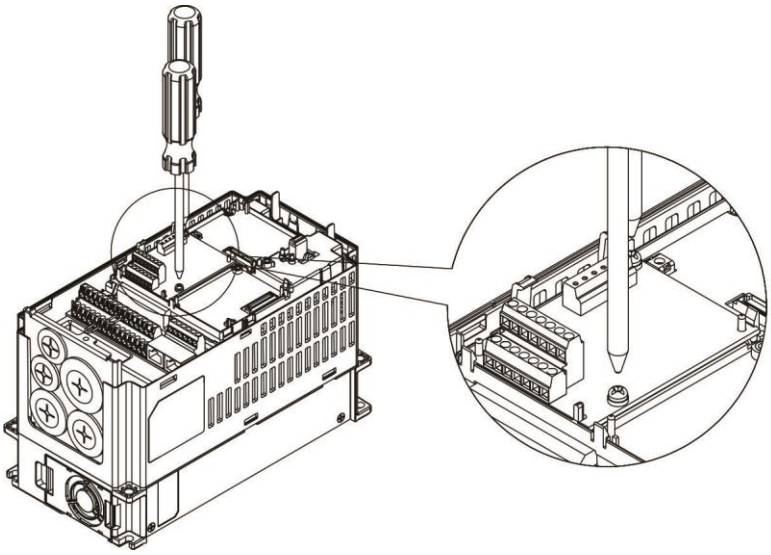

Remove the two screws as shown in the figure on the left.

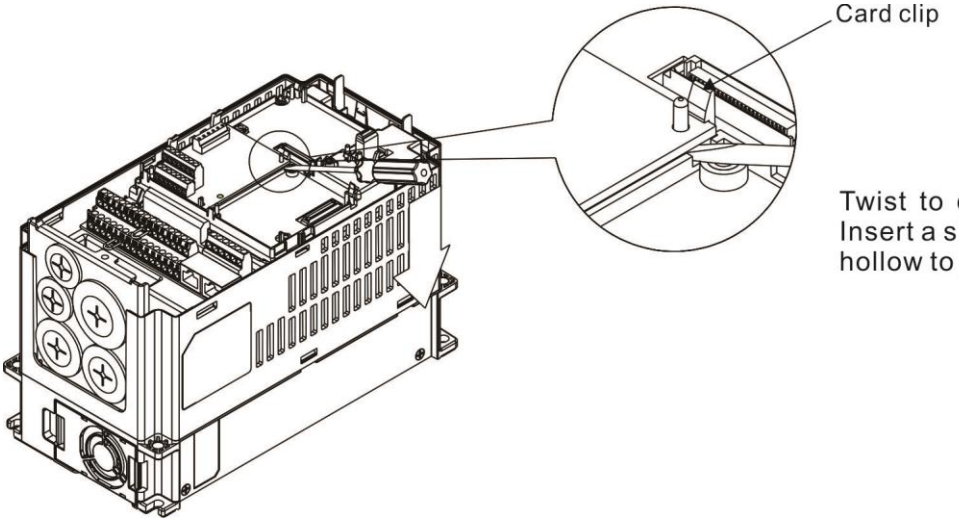


Twist to open the card clip.
Insert a slot type screwdriver into the hollow to prize the PCB off the card clip.

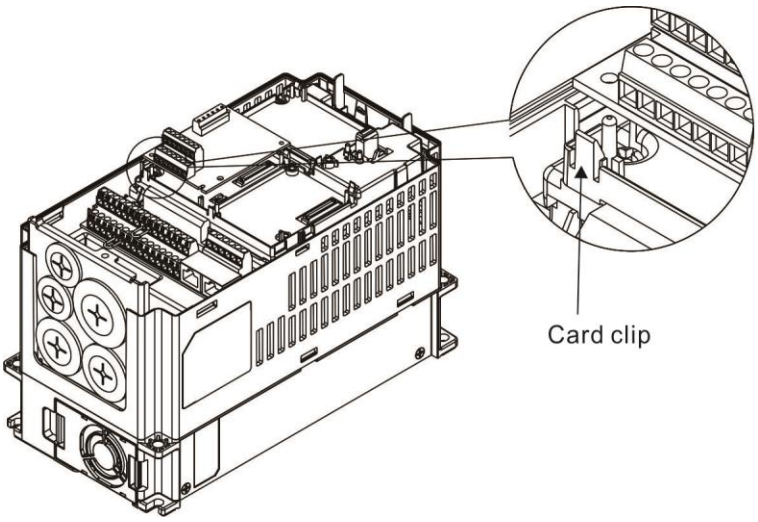


Twist to open the other card clip to remove the PCB.

## 8-2 EMC-D42A

| | Terminals | Descriptions |
|---|---|---|
| I/O Extension Card | COM | Common for Multi-function input terminals<br>Select SINK（NPN）/SOURCE（PNP）in J1 jumper / external power supply |
| | MI10~ MI13 | Refer to Pr. 02-26~Pr. 02-29 to program the multi-function inputs MI10~MI13.<br>Internal power is applied from terminal E24: +24Vdc±5% 200mA, 5W<br>External power +24VDC: max. voltage 30VDC, min. voltage 19VDC, 30W<br>ON: the activation current is 6.5mA<br>OFF: leakage current tolerance is 10μA |
| | MO10~MO11 | Multi-function output terminals (photocoupler)<br>The AC motor drive releases various monitor signals, such as drive in operation, frequency attained and overload indication, via transistor (open collector).<br> 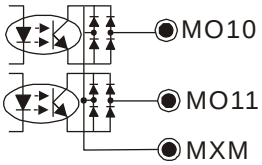 |
| | MXM | Common for multi-function output terminals MO10, MO11(photo coupler)<br>Max 48VDC 50mA |

## 8-3 EMC-D611A

| | Terminals | Descriptions |
|---|---|---|
| I/O Extension Card | AC | AC power Common for multi-function input terminal (Neutral) |
| | MI10~ MI15 | Refer to Pr. 02.26~ Pr. 02.31 for multi-function input selection<br>Input voltage: 100~130VAC<br>Input frequency: 47~63Hz<br>Input impedance: 27KΩ<br>Terminal response time:<br>ON: 10ms<br>OFF: 20ms |

## 8-4 EMC-R6AA

| | Terminals | Descriptions |
|---|---|---|
| Relay Extension Card | R10~R15<br>R10~R15 | Refer to Pr. 02-36~ Pr. 02-41 for multi-function input selection<br>Resistive load:<br>5A(N.O.) 250VAC<br>5A(N.O.) 30VDC<br>Inductive load (COS 0.4)<br>2.0A(N.O.) 250VAC<br>2.0A(N.O.) 30VDC<br>It is used to output each monitor signal, such as drive is in operation, frequency attained or overload indication. |

# 8-5 CMC-MOD01

## 8-5-1 Features

1. Supports Modbus TCP protocol
2. MDI/MDI-X auto-detect
3. Baud rate: 10/100Mbps auto-detect
4. E-mail alarm
5. AC motor drive keypad/Ethernet configuration
6. Virtual serial port.

## 8-5-2 Product File

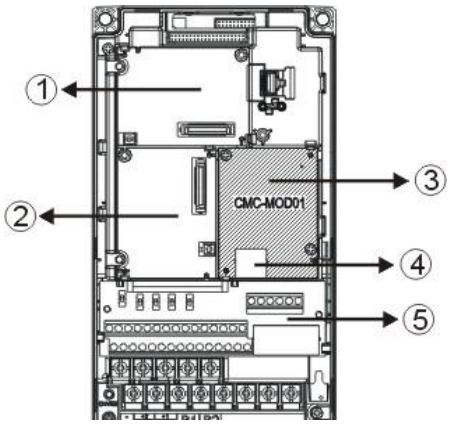


| | |
|---|---|
| ① | I/O CARD & Relay Card |
| ② | PG Card |
| ③ | Comm. Card |
| ④ | RJ-45 connection port |
| ⑤ | Removable control circuit terminal |

## 8-5-3 Specifications

Network Interface

| | |
|---|---|
| Interface | RJ-45 with Auto MDI/MDIX |
| Number of ports | 1 Port |
| Transmission method | IEEE 802.3, IEEE 802.3u |
| Transmission cable | Category 5e shielding 100M |
| Transmission speed | 10/100 Mbps Auto-Detect |
| Network protocol | ICMP, IP, TCP, UDP, DHCP, HTTP, SMTP, MODBUS OVER TCP/IP, Delta Configuration |

Electrical Specification

| | |
|---|---|
| Power supply voltage | 5VDC (supply by the AC motor drive) |
| Insulation voltage | 500VDC |
| Power consumption | 0.8W |
| Weight | 25g |

Environment

| | |
|---|---|
| Noise immunity | ESD (IEC 61800-5-1, IEC 61000-4-2)<br>EFT (IEC 61800-5-1, IEC 61000-4-4)<br>Surge Test (IEC 61800-5-1, IEC 61000-4-5)<br>Conducted Susceptibility Test (IEC 61800-5-1, IEC 61000-4-6) |
| Operation/storage | Operation: -10°C ~ 50°C (temperature), 90% (humidity)<br>Storage: -25°C ~ 70°C (temperature), 95% (humidity) |
| Vibration/shock immunity | International standard: IEC 61800-5-1, IEC 60068-2-6/IEC 61800-5-1, IEC 60068-2-27 |

### 8-5-4 Install CMC-MOD01 to VFD-CP2000

1. Switch off the power supply of VFD-CP2000.
2. Open the front cover of VFD-CP2000.
3. Place the insulation spacer into the positioning pin at Slot 1 (shown in Figure 3), and aim the two holes on the PCB at the positioning pin. Press the pin to clip the holes with the PCB (shown in Figure 4).
4. Screw up at torque 6~8 kg-cm / [5.21~6.94 in-lb.] / [0.6~0.8Nm] after the PCB is clipped with the holes (shown in Figure 5).

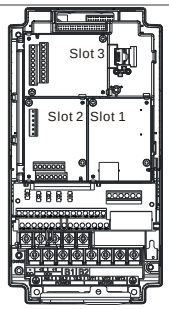

[Figure 3]

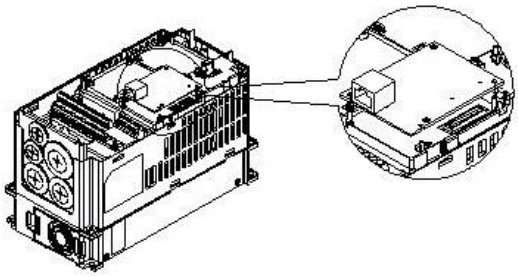
[Figure 4]

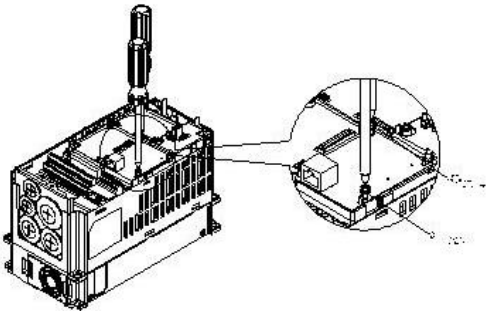
[Figure 5]

### 8-5-5 Communication Parameters for VFD-CP2000 Connected to Ethernet

When VFD-CP2000 is linking to Ethernet, please set up the communication parameters base on the table below. Ethernet master will be able to read/write the frequency word and control word of VFD-CP2000 after communication parameters setup.

| Parameter | Function | Set value (Dec) | Explanation |
|---|---|---|---|
| 00-20 | Source of frequency command setting | 8 | The frequency command is controlled by communication card. |
| 00-21 | Source of operation command setting | 5 | The operation command is controlled by communication card. |

| Parameter | Function | Set value (Dec) | Explanation |
|---|---|---|---|
| 09-30 | Decoding method for communication | 0 | Decoding method for Delta AC motor drive |
| 09-75 | IP setting | 0 | Static IP(0) / Dynamic distribution IP(1) |
| 09-76 | IP address -1 | 192 | IP address 192.168.1.5 |
| 09-77 | IP address -2 | 168 | IP address 192.168.1.5 |
| 09-78 | IP address -3 | 1 | IP address 192.168.1.5 |
| 09-79 | IP address -4 | 5 | IP address 192.168.1.5 |
| 09-80 | Netmask -1 | 255 | Netmask 255.255.255.0 |
| 09-81 | Netmask -2 | 255 | Netmask 255.255.255.0 |
| 09-82 | Netmask -3 | 255 | Netmask 255.255.255.0 |
| 09-83 | Netmask -4 | 0 | Netmask 255.255.255.0 |
| 09-84 | Default gateway -1 | 192 | Default gateway 192.168.1.1 |
| 09-85 | Default gateway -2 | 168 | Default gateway 192.168.1.1 |
| 09-86 | Default gateway -3 | 1 | Default gateway 192.168.1.1 |
| 09-87 | Default gateway -4 | 1 | Default gateway 192.168.1.1 |

### 8-5-6 Disconnecting CMC- MOD01 from VFD-CP2000

1. Switch off the power supply of VFD-CP2000.
2. Remove the two screws (shown in Figure 6).
3. Twist opens the card clip and inserts the slot type screwdriver to the hollow to prize the PCB off the card clip (shown in Figure 7).
4. Twist opens the other card clip to remove the PCB (shown in Figure 8).

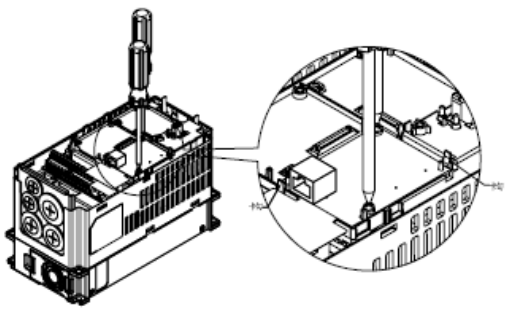

[Figure 6]

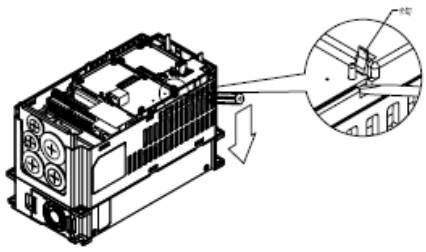

[Figure 7]

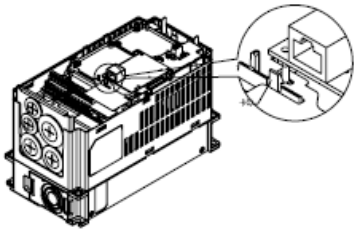

[Figure 8]

### 8-5-7 Basic Registers

| BR# | R/W | Content | Explanation |
|---|---|---|---|
| #0 | R | Model name | Set up by the system; read only. The model code of CMC-MOD01=H'0203 |
| #1 | R | Firmware version | Displaying the current firmware version in hex, e.g. H'0100 indicates the firmware version V1.00. |
| #2 | R | Release date of the version | Displaying the data in decimal form. 10,000s digit and 1,000s digit are for "month"; 100s digit and 10s digit are for "day".<br>For 1 digit: 0 = morning; 1 = afternoon. |
| #11 | R/W | Modbus Timeout | Default setting: 500 (ms) |

| | | | |
|---|---|---|---|
| #13 | R/W | Keep Alive Time | Default setting: 30 (s) |

### 8-5-8 LED Indicator & Troubleshooting

LED Indicators

| LED | Status | | Indication | How to correct it? |
|---|---|---|---|---|
| POWER | Green | On | Power supply in normal status | -- |
| | | Off | No power supply | Check the power supply |
| LINK | Green | On | Network connection in normal status | -- |
| | | Flashes | Network in operation | -- |
| | | Off | Network not connected | Check if the network cable is connected |

Troubleshooting

| Abnormality | Cause | How to correct it? |
|---|---|---|
| POWER LED off | AC motor drive not powered | Check if AC motor drive is powered, and if the power supply is normal. |
| | CMC-MOD01 not connected to AC motor drive | Make sure CMC-MOD01 is connected to AC motor drive. |
| LINK LED off | CMC-MOD01 not connected to network | Make sure the network cable is correctly connected to network. |
| | Poor contact to RJ-45 connector | Make sure RJ-45 connector is connected to Ethernet port. |
| No module found | CMC-MOD01 not connected to network | Make sure CMC-MOD01 is connected to network. |
| | PC and CMC-MOD01 in different networks and blocked by network firewall. | Search by IP or set up relevant settings by AC motor drive keypad. |
| Fail to open CMC-MOD01 setup page | CMC-MOD01 not connected to network | Make sure CMC-MOD01 is connected to the network. |
| | Incorrect communication setting in DCISoft | Make sure the communication setting in DCISoft is set to Ethernet. |
| | PC and CMC-MOD01 in different networks and blocked by network firewall. | Conduct the setup by AC motor drive keypad. |
| Able to open CMC-MOD01 setup page but fail to utilize webpage monitoring | Incorrect network setting in CMC-MOD01 | Check if the network setting for CMC-MOD01 is correct. For the Intranet setting in your company, please consult your IT staff. For the Internet setting in your home, please refer to the network setting instruction provided by your ISP. |
| Fail to send e-mail | Incorrect network setting in CMC-MOD01 | Check if the network setting for CMC-MOD01 is correct. |
| | Incorrect mail server setting | Please confirm the IP address for SMTP-Server. |

# 8-6 CMC-PD01

## 8-6-1 Features

1. Supports PZD control data exchange.
2. Supports PKW polling AC motor drive parameters.
3. Supports user diagnosis function.
4. Auto-detects baud rates; supports Max. 12Mbps.

## 8-6-2 Product Profile

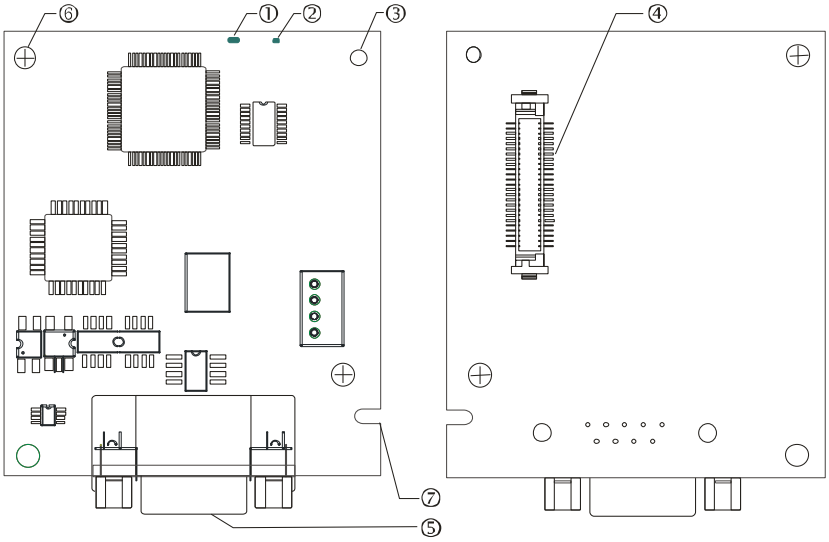


| |
|---|
| 1. NET indicator |
| 2. POWER indicator |
| 3. Positioning hole |
| 4. AC motor drive connection port |
| 5. PROFIBUS DP connection port |
| 6. Screw fixing hole |
| 7. Fool-proof groove |

## 8-6-3 Specifications

PROFIBUS DP Connector

| | |
|---|---|
| Interface | DB9 connector |
| Transmission method | High-speed RS-485 |
| Transmission cable | Shielded twisted pair cable |
| Electrical isolation | 500VDC |

Communication

| | |
|---|---|
| Message type | Cyclic data exchange |
| Module name | CMC-PD01 |
| GSD document | DELA08DB.GSD |
| Company ID | 08DB (HEX) |
| Serial transmission speed supported (auto-detection) | 9.6kbps; 19.2kbps; 93.75kbps; 187.5kbps; 125kbps; 250kbps; 500kbps; 1.5Mbps; 3Mbps; 6Mbps; 12Mbps (bit /per second) |

Electrical Specification

| | |
|---|---|
| Power supply voltage | 5VDC (supplied by AC motor drive) |
| Insulation voltage | 500VDC |
| Power consumption | 1W |
| Weight | 28g |

Environment

| | |
|---|---|
| Noise immunity | ESD(IEC 61800-5-1,IEC 6100-4-2)<br>EFT(IEC 61800-5-1,IEC 6100-4-4)<br>Surge Teat(IEC 61800-5-1,IEC 6100-4-5)<br>Conducted Susceptibility Test(IEC 61800-5-1,IEC 6100-4-6) |
| Operation /storage | Operation: -10ºC ~ 50ºC (temperature), 90% (humidity)<br>Storage: -25ºC ~ 70ºC (temperature), 95% (humidity) |
| Shock / vibration resistance | International standards: IEC61131-2, IEC68-2-6 (TEST Fc)/IEC61131-2 & IEC 68-2-27 (TEST Ea) |

### 8-6-4 Installation

PROFIBUS DP Connector

| PIN | PIN name | Definition |
|---|---|---|
| 1 | - | Not defined |
| 2 | - | Not defined |
| 3 | Rxd/Txd-P | Sending/receiving data P(B) |
| 4 | - | Not defined |
| 5 | DGND | Data reference ground |
| 6 | VP | Power voltage – positive |
| 7 | - | Not defined |
| 8 | Rxd/Txd-N | Sending/receiving data N(A) |
| 9 | - | Not defined |

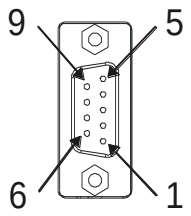


### 8-6-5 LED Indicator & Troubleshooting

There are 2 LED indicators on CMC-PD01. POWER LED displays the status of the working power. NET LED displays the connection status of the communication.

POWER LED

| LED status | Indication | How to correct it? |
|---|---|---|
| Green light on | Power supply in normal status. | -- |
| Off | No power | Check if the connection between CMC-PD01 and AC motor drive is normal. |

NET LED

| LED status | Indication | How to correct it? |
|---|---|---|
| Green light on | Normal status | -- |
| Red light on | CMC-PD01 is not connected to PROFIBUS DP bus. | Connect CMC-PD01 to PROFIBUS DP bus. |
| Red light flashes | Invalid PROFIBUS communication address | Set the PROFIBUS address of CMC-PD01 between 1 ~ 125 (decimal) |
| Orange light flashes | CMC-PD01 fails to communication with AC motor drive. | Switch off the power and check whether CMC-PD01 is correctly and normally connected to AC motor drive. |

# 8-7 CMC-DN01

## 8-7-1 Functions

1. Based on the high-speed communication interface of Delta HSSP protocol, able to conduct immediate control to AC motor drive.
2. Supports Group 2 only connection and polling I/O data exchange.
3. For I/O mapping, supports Max. 32 words of input and 32 words of output.
4. Supports EDS file configuration in DeviceNet configuration software.
5. Supports all baud rates on DeviceNet bus: 125kbps, 250kbps, 500kbps and extendable serial transmission speed mode.
6. Node address and serial transmission speed can be set up on AC motor drive.
7. Power supplied from AC motor drive.

## 8-7-2 Product Profile

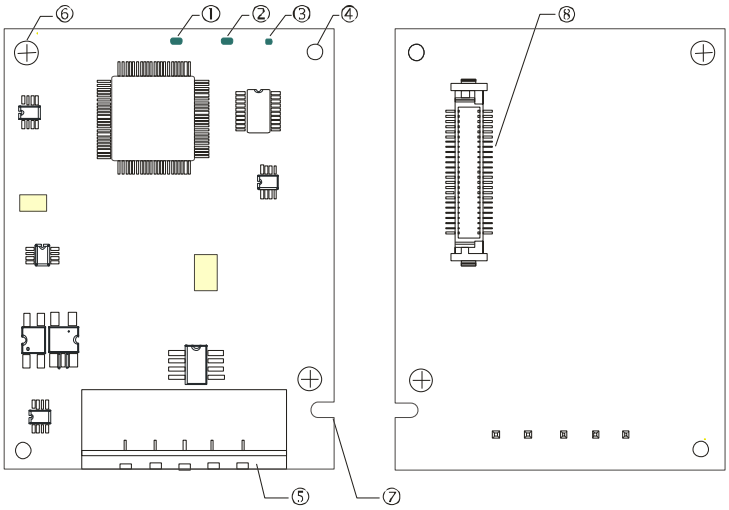


| |
|---|
| 1. NS indicator |
| 2. MS indicator |
| 3. POWER indicator |
| 4. Positioning hole |
| 5. DeviceNet connection port |
| 6. Screw fixing hole |
| 7. Fool-proof groove |
| 8. AC motor drive connection port |

## 8-7-3 Specifications

DeviceNet Connector

| | |
|---|---|
| Interface | 5-PIN open removable connector. Of 5.08mm PIN interval |
| Transmission method | CAN |
| Transmission cable | Shielded twisted pair cable (with 2 power cables) |
| Transmission speed | 125kbps, 250kbps, 500kbps and extendable serial transmission speed mode |
| Network protocol | DeviceNet protocol |

AC Motor Drive Connection Port

| | |
|---|---|
| Interface | 50 PIN communication terminal |
| Transmission method | SPI communication |
| Terminal function | 1. Communicating with AC motor drive<br>2. Transmitting power supply from AC motor drive |
| Communication protocol | Delta HSSP protocol |

Electrical Specification

| | |
|---|---|
| Power supply voltage | 5VDC (supplied by AC motor drive) |
| Insulation voltage | 500VDC |
| Communication wire power consumption | 0.85W |
| Power consumption | 1W |
| Weight | 23g |

Environment

| | |
|---|---|
| Noise immunity | ESD (IEC 61800-5-1,IEC 6100-4-2)<br>EFT (IEC 61800-5-1,IEC 6100-4-4)<br>Surge Teat(IEC 61800-5-1,IEC 6100-4-5)<br>Conducted Susceptibility Test (IEC 61800-5-1,IEC 6100-4-6) |
| Operation /storage | Operation: -10ºC ~ 50ºC (temperature), 90% (humidity)<br>Storage: -25ºC ~ 70ºC (temperature), 95% (humidity) |
| Shock / vibration resistance | International standards: IEC61131-2, IEC68-2-6 (TEST Fc)/IEC61131-2 & IEC 68-2-27 (TEST Ea) |

DeviceNet Connector

| PIN | Signal | Color | Definition |
|---|---|---|---|
| 1 | V+ | Red | DC24V |
| 2 | H | White | Signal+ |
| 3 | S | - | Earth |
| 4 | L | Blue | Signal- |
| 5 | V- | Black | 0V |

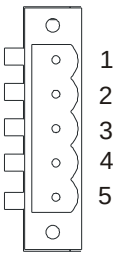


## 8-7-4 LED Indicator & Troubleshooting

There are 3 LED indicators on CMC-DN01. POWER LED displays the status of power supply. MS LED and NS LED are dual-color LED, displaying the connection status of the communication and error messages.

POWER LED

| LED status | Indication | How to correct it? |
|---|---|---|
| Off | Power supply in abnormal status. | Check the power supply of CMC-DN01. |
| Green light on | Power supply in normal status | -- |

NS LED

| LED status | Indication | How to correct it? |
|---|---|---|
| Off | No power supply or CMC-DN01 has not completed MAC ID test yet. | 1. Check the power of CMC-DN01 and see if the connection is normal.<br>2. Make sure at least one or more nodes are on the bus.<br>3. Check if the serial transmission speed of CMC-DN01 is the same as that of other nodes. |
| Green light flashes | CMC-DN01 is on-line but has not established connection to the master. | 1. Configure CMC-DN01 to the scan list of the master.<br>2. Re-download the configured data to the master. |
| Green light on | CMC-DN01 is on-line and is normally connected to the master | -- |
| Red light flashes | CMC-DN01 is on-line, but I/O connection is timed-out. | 1. Check if the network connection is normal.<br>2. Check if the master operates normally. |
| Red light on | 1. The communication is down.<br>2. MAC ID test failure.<br>3. No network power supply.<br>4. CMC-DN01 is off-line. | 1. Make sure all the MAC IDs on the network are not repeated.<br>2. Check if the network installation is normal.<br>3. Check if the baud rate of CMC-DN01 is consistent with that of other nodes.<br>4. Check if the node address of CMC-DN01 is illegal.<br>5. Check if the network power supply is normal. |

MS LED

| LED status | Indication | How to correct it? |
|---|---|---|
| Off | No power supply or being off-line | Check the power supply of CMC-DN01 and see of the connection is normal. |
| Green light flashes | Waiting for I/O data | Switch the master PLC to RUN status |
| Green light on | I/O data are normal | -- |
| Red light flashes | Mapping error | 1. Reconfigure CMC-DN01<br>2. Re-power AC motor drive |
| Red light on | Hardware error | 1. See the error code displayed on AC motor drive.<br>2. Send back to the factory for repair if necessary. |
| Orange light flashes | CMC-DN01 is establishing connection with AC motor drive. | If the flashing lasts for a long time, check if CMC-DN01 and AC motor drive are correctly installed and normally connected to each other. |

# 8-8 CMC-EIP01

## 8-8-1 Features

1. Supports Modbus TCP and Ethernet/IP protocol
2. MDI/MDI-X auto-detect
3. Baud rate: 10/100Mbps auto-detect
4. AC motor drive keypad/Ethernet configuration
5. Virtual serial port

## 8-8-2 Product Profile

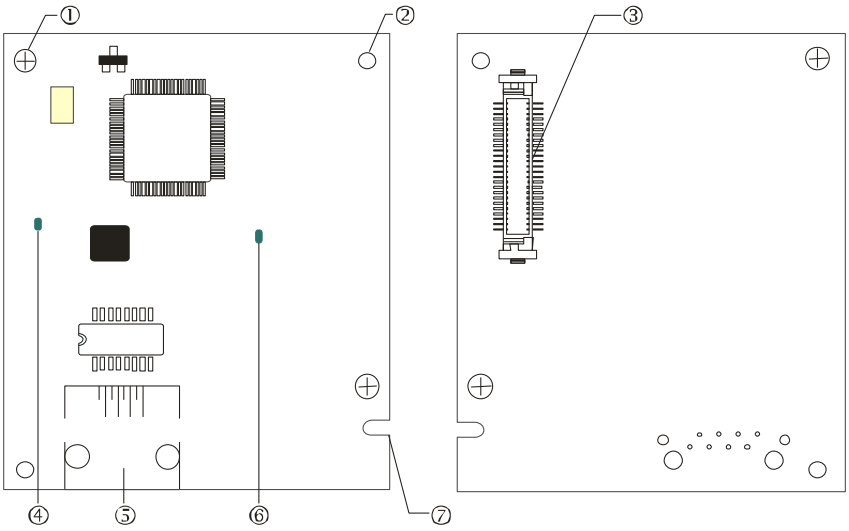


[Figure1]

| |
|---|
| 1. Screw fixing hole |
| 2. Positioning hole |
| 3. AC motor drive connection port |
| 4. LINK indicator |
| 5. RJ-45 connection port |
| 6. POWER indicator |
| 7. Fool-proof groove |

## 8-8-3 Specifications

Network Interface

| | |
|---|---|
| Interface | RJ-45 with Auto MDI/MDIX |
| Number of ports | 1 Port |
| Transmission method | IEEE 802.3, IEEE 802.3u |
| Transmission cable | Category 5e shielding 100M |
| Transmission speed | 10/100 Mbps Auto-Detect |
| Network protocol | ICMP, IP, TCP, UDP, DHCP, HTTP, SMTP, MODBUS OVER TCP/IP, EtherNet/IP, Delta Configuration |

Electrical Specification

| | |
|---|---|
| Weight | 25g |
| Insulation voltage | 500VDC |
| Power consumption | 0.8W |
| Power supply voltage | 5VDC |

Environment

| | |
|---|---|
| Noise immunity | ESD (IEC 61800-5-1,IEC 61000-4-2)<br>EFT (IEC 61800-5-1,IEC 61000-4-4)<br>Surge Test (IEC 61800-5-1,IEC 61000-4-5)<br>Conducted Susceptibility Test (IEC 61800-5-1,IEC 61000-4-6) |
| Operation/storage | Operation: -10°C ~ 50°C (temperature), 90% (humidity)<br>Storage: -25°C ~ 70°C (temperature), 95% (humidity) |
| Vibration/shock immunity | International standard: IEC 61800-5-1, IEC 60068-2-6/IEC 61800-5-1, IEC 60068-2-27 |

### 8-8-4 Installation

Connecting CMC-EIP01 to Network

1. Turn off the power of AC motor drive.
2. Open the cover of AC motor drive.
3. Connect CAT-5e network cable to RJ-45 port on CMC-EIP01 (See Figure 2).

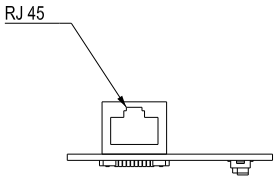


[Figure 2]

**RJ-45** PIN Definition

| PIN | Signal | Definition |
|---|---|---|
| 1 | Tx+ | Positive pole for data transmission |
| 2 | Tx- | Negative pole for data transmission |
| 3 | Rx+ | Positive pole for data receiving |
| 4 | -- | N/C |

| PIN | Signal | Definition |
|---|---|---|
| 5 | -- | N/C |
| 6 | Rx- | Negative pole for data receiving |
| 7 | -- | N/C |
| 8 | -- | N/C |

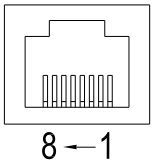


### 8-8-5 Connecting CMC-EIP01 to VFD-CP2000

1. Switch off the power of AC motor drive.
2. Open the front cover of AC motor drive.
3. Place the insulation spacer into the positioning pin at Slot 1 (shown in Figure 3), and aim the two holes on the PCB at the positioning pin. Press the pin to clip the holes with the PCB (see Figure 4).
4. Screw up at torque 6~8 kg-cm / [5.21~6.94 in-lb.] / [0.6~0.8Nm] after the PCB is clipped with the holes (see Figure 5).

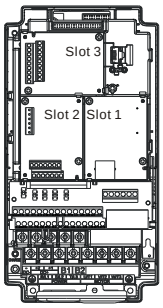


[Figure 3]

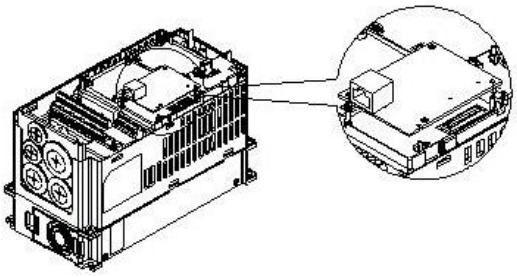

[Figure 4]

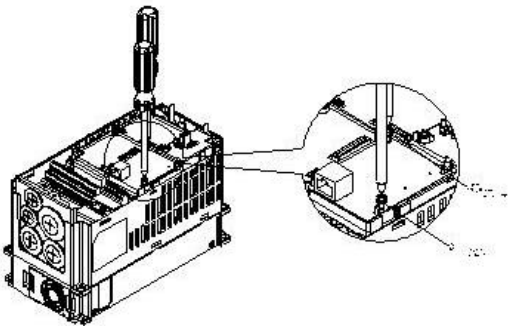

[Figure 5]

### 8-8-6 Communication Parameters for VFD-CP2000 Connected to Ethernet

When CP2000 is connected to Ethernet network, please set up the communication parameters according to the table below. The Ethernet master is only able to read/write the frequency word and control word of VFD-CP2000 after the communication parameters are set.

| Parameter | Function | Set value (Dec) | Explanation |
|---|---|---|---|
| 00-20 | Source of frequency command setting | 8 | The frequency command is controlled by communication card. |
| 00-21 | Source of operation command setting | 5 | The operation command is controlled by communication card. |
| 09-30 | Decoding method for communication | 0 | The decoding method for Delta AC motor drive |
| 09-75 | IP setting | 0 | Static IP(0) / Dynamic distribution IP(1) |
| 09-76 | IP address -1 | 192 | IP address 192.168.1.5 |
| 09-77 | IP address -2 | 168 | IP address 192.168.1.5 |
| 09-78 | IP address -3 | 1 | IP address 192.168.1.5 |
| 09-79 | IP address -4 | 5 | IP address 192.168.1.5 |
| 09-80 | Netmask -1 | 255 | Netmask 255.255.255.0 |
| 09-81 | Netmask -2 | 255 | Netmask 255.255.255.0 |
| 09-82 | Netmask -3 | 255 | Netmask 255.255.255.0 |
| 09-83 | Netmask -4 | 0 | Netmask 255.255.255.0 |
| 09-84 | Default gateway -1 | 192 | Default gateway 192.168.1.1 |
| 09-85 | Default gateway -2 | 168 | Default gateway 192.168.1.1 |
| 09-86 | Default gateway -3 | 1 | Default gateway 192.168.1.1 |
| 09-87 | Default gateway -4 | 1 | Default gateway 192.168.1.1 |

### 8-8-7 Disconnecting CMC- EIP01 from VFD-CP2000

1. Switch off the power supply of VFD-CP2000.
2. Remove the two screws (see Figure 6).
3. Twist opens the card clip and inserts the slot type screwdriver to the hollow to prize the PCB off the card clip (see Figure 7).
4. Twist opens the other card clip to remove the PCB (see Figure 8).

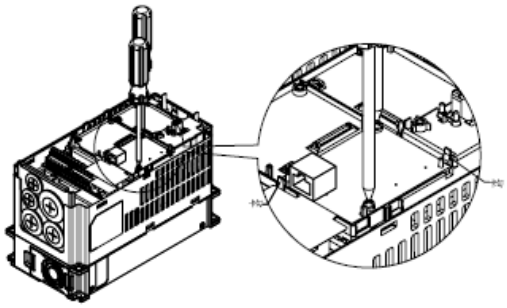

[Figure 6]

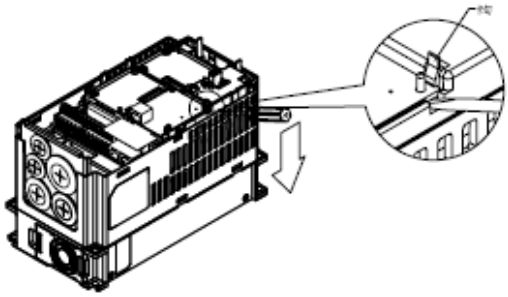

[Figure 7]

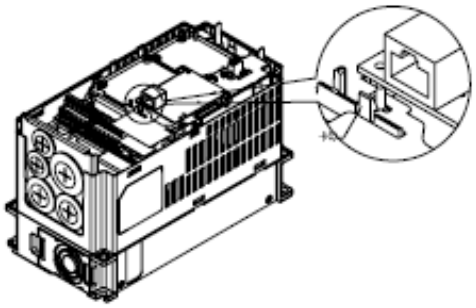

[Figure 8]

### 8-8-8 LED Indicator & Troubleshooting

There are 2 LED indicators on CMC-EIP01. The POWER LED displays the status of power supply, and the LINK LED displays the connection status of the communication.

LED Indicators

| LED | Status | | Indication | How to correct it? |
|---|---|---|---|---|
| POWER | Green | On | Power supply in normal status | -- |
| | | Off | No power supply | Check the power supply. |
| LINK | Green | On | Network connection in normal status | -- |
| | | Flashes | Network in operation | -- |
| | | Off | Network not connected | Check if the network cable is connected. |

Troubleshooting

| Abnormality | Cause | How to correct it? |
|---|---|---|
| POWER LED off | AC motor drive not powered | Check if AC motor drive is powered, and if the power supply is normal. |
| | CMC-EIP01 not connected to AC motor drive | Make sure CMC-EIP01 is connected to AC motor drive. |
| LINK LED off | CMC-EIP01 not connected to network | Make sure the network cable is correctly connected to network. |

| Abnormality | Cause | How to correct it? |
|---|---|---|
| | Poor contact to RJ-45 connector | Make sure RJ-45 connector is connected to Ethernet port. |
| No communication card found | CMC-EIP01 not connected to network | Make sure CMC-EIP01 is connected to network. |
| | PC and CMC-EIP01 in different networks and blocked by network firewall. | Search by IP or set up relevant settings by AC motor drive keypad. |
| Fail to open CMC-EIP01 setup page | CMC-EIP01 not connected to network | Make sure CMC-EIP01 is connected to the network. |
| | Incorrect communication setting in DCISoft | Make sure the communication setting in DCISoft is set to Ethernet. |
| | PC and CMC-EIP01 in different networks and blocked by network firewall. | Conduct the setup by AC motor drive keypad. |
| Able to open CMC-EIP01 setup page but fail to utilize webpage monitoring | Incorrect network setting in CMC-EIP01 | Check if the network setting for CMC-EIP01 is correct. For the Intranet setting in your company, please consult your IT staff. For the Internet setting in your home, please refer to the network setting instruction provided by your ISP. |
| Fail to send e-mail | Incorrect network setting in CMC-EIP01 | Check if the network setting for CMC-EIP01 is correct. |
| | Incorrect mail server setting | Please confirm the IP address for SMTP-Server. |

# 8-9 EMC-COP01

## 8-9-1 Position of terminal resistance

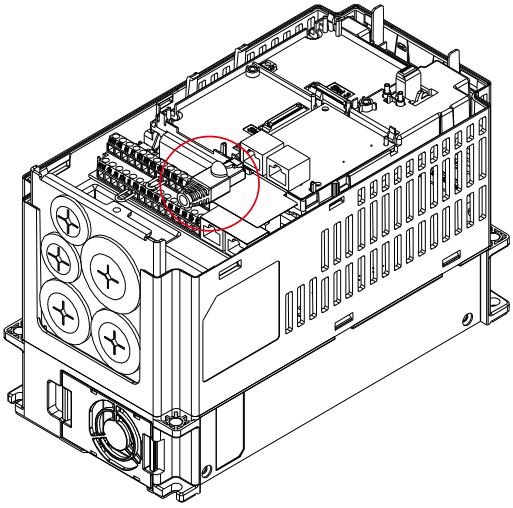

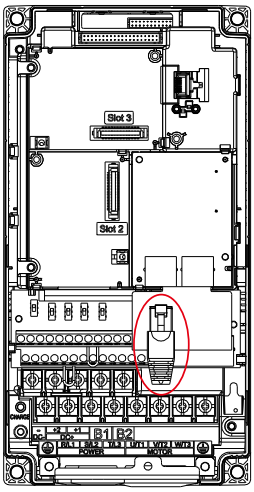


## 8-9-2 RJ-45 Pin definition

RS485 socket

| Pin | Pin name | Definition |
|---|---|---|
| 1 | CAN_H | CAN_H bus line (dominant high) |
| 2 | CAN_L | CAN_L bus line (dominant low) |
| 3 | CAN_GND | Ground/0V/V- |
| 7 | CAN_GND | Ground/0V/V- |

## 8-9-3 Specifications

| | |
|---|---|
| Interface | RJ-45 |
| Number of ports | 1 Port |
| Transmission method | CAN |
| Transmission cable | CAN standard cable |
| Transmission speed | 1M bps, 500K bps, 250K bps, 125K bps, 100K bps, 50K bps |
| Communication protocol | CANopen |

## ■ CANopen Communication Cable

Model: TAP-CB03, TAP-CB04

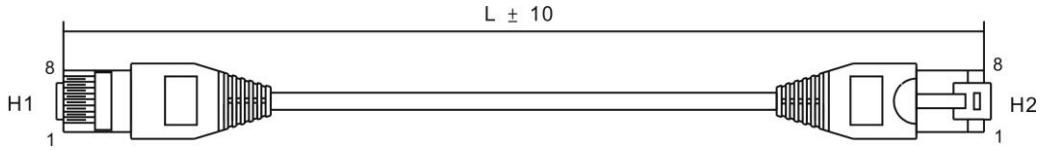


| No. | Models | L | |
|---|---|---|---|
| | | mm | inch |
| 1 | UC-CMC003-01A | 300 | 11.8 |
| 2 | UC-CMC005-01A | 500 | 19.6 |
| 3 | UC-CMC010-01A | 1000 | 39 |
| 4 | UC-CMC015-01A | 1500 | 59 |
| 5 | UC-CMC020-01A | 2000 | 78.7 |
| 6 | UC-CMC030-01A | 3000 | 118.1 |
| 7 | UC-CMC050-01A | 5000 | 196.8 |
| 8 | UC-CMC100-01A | 10000 | 393.7 |
| 9 | UC-CMC200-01A | 20000 | 787.4 |

## ■ CANopen Dimension

Model: TAP-CN03

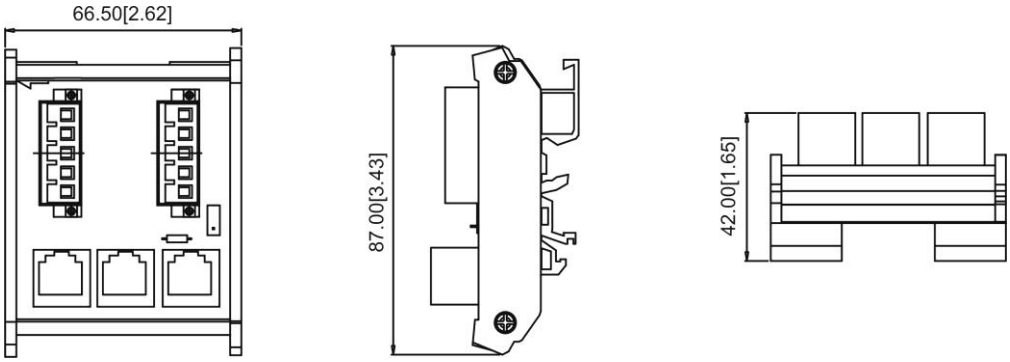


**NOTE**

For more information on CANopen, please refer to Chapter 15 CANopen Overview or CANopen user manual can also be downloaded on Delta website: http://www.delta.com.tw/industrialautomation/.

## 8-10 EMC-BPS01

| | Terminals | Descriptions |
|---|---|---|
| External Power Supply | 24V<br>GND | Input power: 24V±5%<br>Maximum input current:0.5A<br>Note:<br>1) Do not connect control terminal +24V (Digital control signal common: SOURCE) directly to the EMC-BPS01input terminal 24V.<br>2) Do not connect control terminal GND directly to the EMC-BPS01 input terminal GND. |
| | | Function: When the motor drive is powered by the EMC-BPS01, all the communications are open. All the communication cards and functions below are supported.<br>1. Read and write parameters.<br>2. Warning messages can be displayed on the keypad.<br>3. Every button on the keypad is operational except the RUN button.<br>4. Analog inputs are effective<br>5. Keep the communication open.<br>6. Multi-function input terminals needs external power to work.<br>The following functions are NOT supported.<br>Relay out (including extension card), PG card and PLC function. |

Note: Refer to I/O & Relay extension card installation/ disconnecting method for PG Card installation/ disconnecting.

[This page intentionally left blank]

# Chapter 9 Specifications

9-1 230V Series

9-2 460V Series

9-3 575V Series

9-4 690V Series

9-5 Environment for Operation, Storage and Transportation

9-6 Specification for Operation Temperature and Protection Level

9-7 Derating of Ambient Temperature and Altitude

# 9-1 230V Series

| Frame | | | A | | | | | B | | | C | | | D | | E | | |
|---|---|---|---|---|---|---|---|---|---|---|---|---|---|---|---|---|---|---|
| Model: VFD_ _ _CP23_-_ _ | | | 007 | 015 | 022 | 037 | 055 | 075 | 110 | 150 | 185 | 220 | 300 | 370 | 450 | 550 | 750 | 900 |
| Output Rating | Light Duty | Rated output capacity (kVA) | 2 | 3 | 4 | 6 | 8.4 | 12 | 18 | 24 | 30 | 36 | 42 | 58 | 72 | 86 | 110 | 128 |
| | | Rated output current (A) | 5 | 7.5 | 10 | 15 | 21 | 31 | 46 | 61 | 75 | 90 | 105 | 146 | 180 | 215 | 276 | 322 |
| | | Applicable motor output (kW) | 0.75 | 1.5 | 2.2 | 3.7 | 5.5 | 7.5 | 11 | 15 | 18.5 | 22 | 30 | 37 | 45 | 55 | 75 | 90 |
| | | Applicable motor output (HP) | 1 | 2 | 3 | 5 | 7.5 | 10 | 15 | 20 | 25 | 30 | 40 | 50 | 60 | 75 | 100 | 125 |
| | | Overload tolerance | 120% of rated current for 1 minute during every 5 minutes | | | | | | | | | | | | | | | |
| | | Max. output frequency (Hz) | 599.00Hz | | | | | | | | | | | | | 400.00Hz | | |
| | | Carrier frequency (kHz) | 2~15kHz (8kHz) | | | | | | | | 2~10kHz(6kHz) | | | | | 2~9kHz(4kHz) | | |
| | Normal Duty | Rated output capacity (kVA) | 1.2 | 2 | 3.2 | 4.4 | 6.8 | 10 | 13 | 20 | 26 | 30 | 36 | 48 | 58 | 72 | 86 | 102 |
| | | Rated output current (A) | 3 | 5 | 8 | 11 | 17 | 25 | 33 | 49 | 65 | 75 | 90 | 120 | 146 | 180 | 215 | 255 |
| | | Applicable motor output (kW) | 0.4 | 0.75 | 1.5 | 2.2 | 3.7 | 5.5 | 7.5 | 11 | 15 | 19 | 22 | 30 | 37 | 45 | 55 | 75 |
| | | Applicable motor output (HP) | 0.5 | 1 | 2 | 3 | 5 | 7.5 | 10 | 15 | 20 | 25 | 30 | 40 | 50 | 60 | 75 | 100 |
| | | Overload tolerance | 120% of rated current for 1 minute during every 5 minutes;<br>160% of rated current for 3 seconds during every 25 seconds | | | | | | | | | | | | | | | |
| | | Max. output frequency (Hz) | 599.00Hz | | | | | | | | | | | | | 400.00Hz | | |
| | | Carrier frequency (kHz) | 2~15kHz (8kHz) | | | | | | | | 2~10kHz(6kHz) | | | | | 2~9kHz(4kHz) | | |
| Input Rating | | Input current (A) Light duty | 6.4 | 9.6 | 15 | 22 | 25 | 35 | 50 | 65 | 83 | 100 | 116 | 146 | 180 | 215 | 276 | 322 |
| | | Input current (A) Normal duty | 3.9 | 6.4 | 12 | 16 | 20 | 28 | 36 | 52 | 72 | 83 | 99 | 124 | 143 | 171 | 206 | 245 |
| | | Rated voltage / Frequency | 3 phase, AC 200V~240V (-15% ~ +10%), 50/60Hz | | | | | | | | | | | | | | | |
| | | Operating voltage range | 170~264Vac | | | | | | | | | | | | | | | |
| | | Frequency tolerance | 47~63Hz | | | | | | | | | | | | | | | |
| Efficiency (%) | | | 96 | | | | | 96.5 | | | 96.5 | | | 97 | | 97 | | |
| Weight (Kg) | | | 2.6± 0.3 | | | | | 5.4± 1 | | | 9.8± 1.5 | | | 38.5± 1.5 | | 64.8± 1.5 | | |
| Cooling method | | | Natural cooling | Fan cooling | | | | | | | | | | | | | | |
| Braking chopper | | | Built-in | | | | | | | | | | | Optional | | | | |
| DC choke | | | Optional | | | | | | | | | | | Built-in, 3% | | | | |
| EMI Filter | | | Optional | | | | | | | | | | | | | | | |

## 9-2 460V Series

| Frame | | | A | | | | | | | B | | | C | | | D0 | |
|---|---|---|---|---|---|---|---|---|---|---|---|---|---|---|---|---|---|
| Model<br>VFD_ _ _CP43_-_ _<br>VFD_ _ _CP4E_-_ _ | | | 007 | 015 | 022 | 037 | 040 | 055 | 075 | 110 | 150 | 185 | 220 | 300 | 370 | 450 | 550 |
| Output rating | Light duty | Rated output capacity (kVA) | 2.4 | 3.3 | 4.4 | 6.8 | 8.4 | 10.4 | 14.3 | 19 | 25 | 30 | 36 | 48 | 58 | 73 | 88 |
| | | Rated output current (A) | 3 | 4.2* | 5.5* | 8.5* | 10.5 | 13* | 18* | 24* | 32* | 38* | 45 | 60* | 73* | 91 | 110 |
| | | Applicable motor output (kW) | 0.75 | 1.5 | 2.2 | 3.7 | 4 | 5.5 | 7.5 | 11 | 15 | 18.5 | 22 | 30 | 37 | 45 | 55 |
| | | Applicable motor output (HP) | 1 | 2 | 3 | 5 | 5 | 7.5 | 10 | 15 | 20 | 25 | 30 | 40 | 50 | 60 | 75 |
| | | Overload tolerance | 120% of rated current for 1 minute during every 5 minutes | | | | | | | | | | | | | | |
| | | Max.output frequency (Hz) | 599.00Hz | | | | | | | | | | | | | | |
| | | Carrier frequency (kHz) | 2~15kHz (8kHz) | | | | | | | | | | 2~10kHz (6kHz) | | | | |
| | Normal duty | Rated output capacity (kVA) | 2.2 | 2.4 | 3.2 | 4.8 | 7.2 | 8.4 | 10.4 | 14.3 | 19 | 25 | 30 | 36 | 48 | 58 | 73 |
| | | Rated output current (A) | 1.7 | 3.0 | 4.0 | 6.0 | 9.0 | 10.5 | 12 | 18 | 24 | 32 | 38 | 45 | 60 | 73 | 91 |
| | | Applicable motor output (kW) | 0.4 | 0.75 | 1.5 | 2.2 | 3.7 | 4 | 5.5 | 7.5 | 11 | 15 | 18.5 | 22 | 30 | 37 | 45 |
| | | Applicable motor output (HP) | 0.5 | 1 | 2 | 3 | 5 | 5 | 7.5 | 10 | 15 | 20 | 25 | 30 | 40 | 53 | 60 |
| | | Overload tolerance | 120% of rated current for 1 minute during every 5 minutes;<br>160% of rated current for 3 seconds during every 25 seconds | | | | | | | | | | | | | | |
| | | Max.output frequency (Hz) | 599.00Hz | | | | | | | | | | | | | | |
| | | Carrier frequency (kHz) | 2~15kHz (8kHz) | | | | | | | | | | 2~10kHz (6kHz) | | | | |
| Input rating | | Input current (A) Light duty | 4.3 | 6 | 8.1 | 12.4 | 16 | 20 | 22 | 26 | 35 | 42 | 50 | 66 | 80 | 91 | 110 |
| | | Input current (A) Normal duty | 3.5 | 4.3 | 5.9 | 8.7 | 14 | 15.5 | 17 | 20 | 26 | 35 | 40 | 47 | 63 | 74 | 101 |
| | | Rated voltage / Frequency | 3 phase, 380V~480VAC (-15% ~ +10%), 50/60Hz | | | | | | | | | | | | | | |
| | | Operating voltage range | 323~528 VAC | | | | | | | | | | | | | | |
| | | Frequency tolerance | 47~63 Hz | | | | | | | | | | | | | | |
| Efficiency (%) | | | 96 | | | | | | | 96.5 | | | 96.5 | | | 97 | |
| Power factor | | | >0.98 | | | | | | | | | | | | | | |
| Weight (Kg) | | | 2.6± 0.3 | | | | | | | 5.4± 1 | | | 9.8± 1.5 | | | 27± 1 | |
| Cooling method | | | Natural cooling | | | Fan cooling | | | | | | | | | | | |
| Braking chopper | | | Frame A, B, C, Built-in;<br>Frame D above, Optional | | | | | | | | | | | | | | |
| DC choke | | | Frame A, B, C, Optional;<br>Frame D above, Built-in 3% | | | | | | | | | | | | | | |
| EMI Filter | | | Frame A, B, C of VFD_ _ _ _CP4EA-_ _: Built-in;<br>Frame A, B, C of VFD_ _ _ _CP43A-_ _, no built-in<br>Frame D above, Optional | | | | | | | | | | | | | | |

# 460V Series

| Frame | | | D | | E | | F | | G | | H | | | |
|---|---|---|---|---|---|---|---|---|---|---|---|---|---|---|
| Model VFD_ _ _CP43_-_ _ | | | 750 | 900 | 1100 | 1320 | 1600 | 1850 | 2200 | 2800 | 3150 | 3550 | 4000 | 5000 |
| Output rating | Light duty | Rated output capacity (kVA) | 120 | 143 | 175 | 207 | 247 | 295 | 367 | 422 | 491 | 544 | 613 | 773 |
| | | Rated output current (A) | 150* | 180 | 220 | 260* | 310 | 370* | 460 | 530 | 616 | 683 | 770 | 930 |
| | | Applicable motor output (kW) | 75 | 90 | 110 | 132 | 160 | 185 | 220 | 280 | 315 | 355 | 400 | 500 |
| | | Applicable motor output (HP) | 100 | 125 | 150 | 175 | 215 | 250 | 300 | 375 | 425 | 475 | 536 | 675 |
| | | Overload tolerance | 120% of rated current for 1 minute during every 5 minutes | | | | | | | | | | | |
| | | Max.output frequency (Hz) | 599.00Hz | 400.00Hz | | | | | | | | | | |
| | | Carrier frequency (kHz) | 2~10kHz (6kHz) | 2~9kHz (4kHz) | | | | | | | | | | |
| | Normal duty | Rated output capacity (kVA) | 88 | 120 | 143 | 175 | 207 | 247 | 295 | 367 | 438 | 491 | 544 | 720 |
| | | Rated output current (A) | 110 | 150 | 180 | 220 | 260 | 310 | 370 | 460 | 550 | 616 | 683 | 866 |
| | | Applicable motor output (kW) | 55 | 75 | 90 | 110 | 132 | 160 | 185 | 220 | 280 | 315 | 355 | 450 |
| | | Applicable motor output (HP) | 75 | 100 | 125 | 150 | 175 | 215 | 250 | 300 | 375 | 425 | 475 | 600 |
| | | Overload tolerance | 120% of rated current for 1 minute during every 5 minutes;<br>160% of rated current for 3 seconds during every 25 seconds | | | | | | | | | | | |
| | | Max.output frequency (Hz) | 599.00Hz | 400.00Hz | | | | | | | | | | |
| | | Carrier frequency (kHz) | 2~10kHz (6kHz) | 2~9kHz (4kHz) | | | | | | | | | | |
| Input rating | | Input current (A) Light duty | 150 | 180 | 220 | 260 | 310 | 370 | 460 | 530 | 616 | 683 | 770 | 930 |
| | | Input current (A) Normal duty | 114 | 157 | 167 | 207 | 240 | 300 | 380 | 400 | 494 | 555 | 625 | 866 |
| | | Rated voltage / Frequency | 3-phase, 380V~480 VAC (-15% ~ +10%) · 50/60Hz | | | | | | | | | | | |
| | | Operating voltage range | 323~528 VAC | | | | | | | | | | | |
| | | Frequency tolerance | 47~63 Hz | | | | | | | | | | | |
| Efficiency (%) | | | 97 | | 97 | | 97 | | 97.5 | | 97.5 | | | |
| Power factor | | | >0.98 | | | | | | | | | | | |
| Weight (Kg) | | | 38.5± 1.5 | | 64.8± 1.5 | | 86.5± 1.5 | | 134± 4 | | 228 | | | |
| Cooling method | | | Fan cooling | | | | | | | | | | | |
| Braking chopper | | | Optional | | | | | | | | | | | |
| DC choke | | | Built-in, 3% | | | | | | | | | | | |
| EMI Filter | | | Optional | | | | | | | | | | | |

* It means the rated output current is for the models of Version B.

# 9-3 575V Series

| Frame | | | A | | | B | | | |
|---|---|---|---|---|---|---|---|---|---|
| Model VFD_ _ _ _CP53-21 | | | 015 | 022 | 037 | 055 | 075 | 110 | 150 |
| *Output rating | Light duty | Rated output capacity (kVA) | 3 | 4.3 | 6.7 | 9.9 | 12.1 | 18.6 | 24.1 |
| | | Rated output current (A) | 3 | 4.3 | 6.7 | 9.9 | 12.1 | 18.7 | 24.2 |
| | | Applicable motor output (kW) | 1.5 | 2.2 | 3.7 | 5.5 | 7.5 | 11 | 15 |
| | | Applicable motor output (HP) | 2 | 3 | 5 | 7.5 | 10 | 15 | 20 |
| | Normal duty | Rated output capacity (kVA) | 2.5 | 3.6 | 5.5 | 8.2 | 10 | 15.4 | 19.9 |
| | | Rated output current (A) | 2.5 | 3.6 | 5.5 | 8.2 | 10 | 15.4 | 20 |
| | | Applicable motor output (kW) | 0.75 | 1.5 | 2.2 | 3.7 | 5.5 | 7.5 | 11 |
| | | Applicable motor output (HP) | 1 | 2 | 3 | 5 | 7.5 | 10 | 15 |
| | Carrier frequency (kHz) | | 2~15kHz (4kHz) | | | | | | |
| Input rating | Input current (A) Light duty | | 3.8 | 5.4 | 10.4 | 14.9 | 16.9 | 21.3 | 26.3 |
| | Input current (A) Normal duty | | 3.1 | 4.5 | 7.2 | 12.3 | 15 | 18 | 22.8 |
| | Rated voltage / Frequency | | 3-phase, 525V~600 VAC (-15% ~ +10%) · 50/60Hz | | | | | | |
| | Operating voltage range | | 446~660 VAC | | | | | | |
| | Frequency tolerance | | 47~63 Hz | | | | | | |
| Efficiency (%) | | | 97 | | | 98 | | | |
| Power factor | | | > 0.98 | | | | | | |
| Weight (Kg) | | | 3± 0.3 | | | 4.8± 1 | | | |
| Cooling method | | | Natural cooling | | Fan cooling | | | | |
| Braking chopper | | | Built-in | | | | | | |
| DC choke | | | Optional | | | | | | |

# 9-4 690V Series

| Frame | | | C | | | | D | | E | | | |
|---|---|---|---|---|---|---|---|---|---|---|---|---|
| Model VFD_ _ _ _CP63-_ _ | | | 185 | 220 | 300 | 370 | 450 | 550 | 750 | 900 | 1100 | 1320 |
| *Output rating | Light duty | Rated output capacity (kVA) | 29 | 36 | 43 | 54 | 65 | 80 | 103 | 124 | 149 | 179 |
| | | Rated output current (A) | 18.5 | 22 | 30 | 37 | 45 | 55 | 75 | 90 | 110 | 132 |
| | | Applicable motor output (kW) | 25 | 30 | 40 | 50 | 60 | 75 | 100 | 125 | 150 | 175 |
| | | Applicable motor output (HP) | 20 | 25 | 30 | 40 | 50 | 60 | 75 | 100 | 125 | 150 |
| | | Rated output capacity (kVA) | 24 | 30 | 36 | 45 | 54 | 67 | 86 | 104 | 125 | 150 |
| | Normal duty | Rated output current (A) | 24 | 29 | 36 | 43 | 54 | 65 | 80 | 103 | 124 | 149 |
| | | Applicable motor output (kW) | 15 | 18.5 | 22 | 30 | 37 | 45 | 55 | 75 | 90 | 110 |
| | | Applicable motor output (HP) | 20 | 25 | 30 | 40 | 50 | 60 | 75 | 100 | 125 | 150 |
| | | Rated output capacity (kVA) | 15 | 20 | 25 | 30 | 40 | 50 | 60 | 75 | 100 | 125 |
| | | Rated output current (A) | 20 | 24 | 30 | 36 | 45 | 54 | 67 | 86 | 104 | 125 |
| | Carrier frequency (kHz) | | 2~9kHz (4kHz) | | | | | | | | | |
| Input rating | Input current (A) Light duty | | 29 | 36 | 43 | 54 | 65 | 81 | 84 | 102 | 122 | 147 |
| | Input current (A) Normal duty | | 24 | 29 | 36 | 43 | 54 | 65 | 66 | 84 | 102 | 122 |
| | Rated voltage / Frequency | | 3-phase, AC 525V~690V (-15% ~ +10%) · 50/60Hz | | | | | | | | | |
| | Operating voltage range | | 446~759 VAC | | | | | | | | | |
| | Frequency tolerance | | 47~63 Hz | | | | | | | | | |
| Efficiency (%) | | | 97 | | | | | | | | | |
| Power factor | | | >0.98 | | | | | | | | | |
| Weight (Kg) | | | 10± 1.5 | | | | 39± 1.5 | | 61± 1.5 | | | |
| Cooling method | | | Fan cooling | | | | | | | | | |
| Braking chopper | | | Built-in | | | | Optional | | | | | |
| DC choke | | | Optional | | | | Built-in | | | | | |

| Frame | | | F | | G | | H | | | |
|---|---|---|---|---|---|---|---|---|---|---|
| Model VFD_ _ _ _CP63-_ _ | | | 1600 | 2000 | 2500 | 3150 | 4000 | 4500 | 5600 | 6300 |
| *Output rating | Light duty | Rated output capacity (kVA) | 215 | 263 | 347 | 418 | 494.5 | 534.7 | 678.5 | 776 |
| | | Rated output current (A) | 160 | 200 | 250 | 315 | 400 | 450 | 560 | 630 |
| | | Applicable motor output (kW) | 215 | 270 | 335 | 425 | 530 | 600 | 745 | 850 |
| | | Applicable motor output (HP) | 150 | 200 | 250 | 350 | 400 | 450 | 500 | 675 |
| | | Rated output capacity (kVA) | 180 | 220 | 290 | 350 | 430 | 465 | 590 | 675 |
| | Normal duty | Rated output current (A) | 179 | 215 | 239 | 347 | 402.5 | 442.7 | 534.7 | 776 |
| | | Applicable motor output (kW) | 132 | 160 | 200 | 250 | 315 | 355 | 450 | 630 |
| | | Applicable motor output (HP) | 175 | 215 | 270 | 335 | 425 | 475 | 600 | 850 |
| | | Rated output capacity (kVA) | 150 | 150 | 200 | 250 | 350 | 400 | 450 | 500 |
| | | Rated output current (A) | 150 | 180 | 220 | 290 | 350 | 385 | 465 | 675 |
| | Carrier frequency (kHz) | | 2~9kHz (4kHz) | | | | | | | 2~9kHz (3kHz) |
| Input rating | Input current (A) Light duty | | 178 | 217 | 292 | 353 | 454 | 469 | 595 | 681 |
| | Input current (A) Normal duty | | 148 | 178 | 222 | 292 | 353 | 388 | 504 | 681 |
| | Rated voltage / Frequency | | 3-phase, AC 525V~690V (-15% ~ +10%) · 50/60Hz | | | | | | | |
| | Operating voltage range | | 446~759 VAC | | | | | | | |
| | Frequency tolerance | | 47~63 Hz | | | | | | | |
| Efficiency (%) | | | 97 | | 98 | | | | | |
| Power factor | | | >0.98 | | | | | | | |
| Weight (Kg) | | | 88± 1.5 | | 135± 4 | | 243± 5 | | | |
| Cooling method | | | Fan cooling | | | | | | | |
| Braking chopper | | | Optional | | | | | | | |
| DC choke | | | Built-in | | | | | | | |

- The value of the carrier frequency is a factory setting. To increase the carrier frequency, the current needs to be decrease. See derating curve diagram of Pr.06-55 for more information.
- When a load is a surge load, use a higher level model.
- For Frame A, B and C, Model VFDXXXCPXXX-21, the enclosure type is IP20/ UL OPEN TYPE.
- For FRAME D and above, if the last two characters of the model are 00 then the enclosure type is IP00/ IP20/UL OPEN TYPE; if the last two characters of the model are 21, the enclosure type is IP20/ NEMA1/ UL TYPE1.
- *Factory default setting is Light Duty, user can select Normal Duty and Light Duty by Pr. 00-16.

## General Specifications

| | | |
|---|---|---|
| Control Characteristics | Control Mode | Pulse-Width Modulation (PWM) |
| | Control Method | 230V/460V Series: 1: V/F, 2: SVC, 3: PM<br>575V/690V Series: 1: V/F, 2: SVC |
| | Starting Torque | Reach up to 150% above at 0.5Hz. |
| | V/F Curve | 4 point adjustable V/F curve and square curve |
| | Speed Response Ability | 5Hz (vector control can reach up to 40Hz) |
| | Torque Limit | Light duty: max. 130% torque current<br>Normal duty: max. 160% torque current |
| | Torque Accuracy | ±5% |
| | Max. output frequency (Hz) | 230V models: 599.00Hz (55kW and above: 400.00Hz)<br>460V models: 599.00Hz (90kW and above: 400.00Hz)<br>575/690V models: 599.00Hz |
| | Frequency Output Accuracy | Digital command:±0.01%, -10℃~+40℃, Analog command: ±0.1%, 25±10℃ |
| | Output Frequency Resolution | Digital command: 0.01Hz<br>Analog command: 0.03 X max. output frequency/60 Hz (±11 bit) |
| | Overload Tolerance | Normal duty: rated output current is 120% for 60 seconds, rated output current is 160% for 3 seconds<br>Light duty: rated output current is 120% for 60 seconds |
| | Frequency Setting Signal | 0~+10V, 4~20mA, 0~20mA, Pulse input |
| | Accel./decel. Time | 0.00~600.00/0.0~6000.0 seconds |
| | Main control function | Momentary power loss ride thru, Speed search, Over-torque detection, Torque limit, 17-step speed (max), Accel/decel time switch, S-curve accel./decel., 3-wire sequence, Auto-Tuning (rotational, stationary), Dwell, Slip compensation, Torque compensation, JOG frequency, Frequency upper/lower limit settings, DC injection braking at start/stop, High slip braking, Energy saving control, MODOBUS communication (RS-485 RJ45, max. 115.2 kbps) |
| | Fan Control | 230V models: VFD185CP23(included) and above use PWM control; VFD150CP23 and below use On/Off switch.<br>460V models: VFD220CP43/4E(included) and above use PWM control; VFD185CP43/4E and below use On/Off switch.<br>575V / 690V models: PWM control |
| | Motor Protection | Electronic thermal relay protection |
| Protection Characteristics | Over-current Protection | 230V/460V models:<br>Light duty: Over-protection for 200% rated current; current clamp: 130~135%<br>Normal duty: Over-protection for 240%; current clamp: 170~175%<br>575/690V models:<br>Light duty: current clamp: 128~141%<br>Normal duty: Over-protection for 225%; current clamp: 170~175% |
| | Over-voltage Protection | 230V models: drive will stop when DC-BUS voltage exceeds 410V<br>460V models: drive will stop when DC-BUS voltage exceeds 820V<br>575/690V models: drive will stop when DC-BUS voltage exceeds 1189V |
| | Over-temperature Protection | Built-in temperature sensor |
| | Stall Prevention | Stall prevention during acceleration, deceleration and running independently |
| | Restart After Instantaneous Power Failure | Parameter setting up to 20 seconds |
| | Grounding Leakage Current Protection | Leakage current is higher than 50% of rated current of the AC motor drive |
| Certifications | | GB/T12668-2 |

The max. output frequency will vary with the setting of carrier frequency, please refer to the description of Pr. 01-00.

Only 230V/460V models are complied with EAC certification. 575V/690V models are not yet for certified.

# 9-5 Environment for Operation, Storage and Transportation

| | | | |
|---|---|---|---|
| Do NOT expose the AC motor drive in the bad environment, such as dust, direct sunlight, corrosive/inflammable gasses, humidity, liquid and vibration environment. The salt in the air must be less than 0.01mg/cm$^2$ every year. | | | |
| Environment | Installation location | IEC60364-1/IEC60664-1 Pollution degree 2, Indoor use only | |
| | Surrounding Temperature | Storage | -25 ºC ~ +70 ºC |
| | | Transportation | -25 ºC ~ +70 ºC |
| | | Non-condensation, non-frozen | |
| | Rated Humidity | Operation | Max. 95% |
| | | Storage/ Transportation | Max. 95% |
| | | No condense water | |
| | Air Pressure | Operation/ Storage | 86 to 106 kPa |
| | | Transportation | 70 to 106 kPa |
| | Pollution Level | IEC721-3-3 | |
| | | Operation | Class 3C2; Class 3S2 |
| | | Storage | Class 1C2; Class 1S2 |
| | | Transportation | Class 2C2; Class 2S2 |
| | | If the AC motor drive is to be used under harsh environment with high level of contamination (e.g. dew, water, dust), make sure it is installed in an environment qualified for IP54 such as in a cabinet. | |
| | Altitude | Operation | If AC motor drive is installed at altitude 0~1000m, follow normal operation restriction. If it is install at altitude 1000~2000m, decrease 1% of rated current or lower 0.5℃ of temperature for every 100m increase in altitude. Maximum altitude for Corner Grounded is 2000m.Contact Delta for more information, if you need to use this motor drive at an altitude of 2000m or higher. |
| Package Drop | Storage | ISTA procedure 1A (according to weight) IEC60068-2-31 | |
| | Transportation | | |
| Vibration | 1.0mm, peak to peak value range from 2Hz to 13.2 Hz; 0.7G~1.0G range from 13.2Hz to 55Hz; 1.0G range from 55Hz to 512 Hz. Comply with IEC 60068-2-6 | | |
| Impact | IEC/EN 60068-2-27 | | |
| Operation Position | Max. allowed offset angle ±10º (under normal installation position) | | 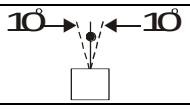 |

## 9-6 Specification for Operation Temperature and Protection Level

| Model | Frame | Top cover | Conduit box | Protection level | Operation temperature |
|---|---|---|---|---|---|
| VFDxxxxCP23A-21<br>VFDxxxxCP43A-21<br>VFDxxxxCP4EA-21<br>VFDxxxxCP4EB-21<br>VFDxxxxCP43C-21<br>VFDxxxxCP53A-21<br>VFDxxxxCP63A-xx | Frame A~C<br>230V: 0.75~30kW<br>460V: 0.75~37kW<br>575V: 1.5~15kW<br>690V: 18.5~37kW | Top cover removed | Standard conduit plate | IP20/UL Open Type | 230V&460V:<br>ND:-10°C~50°C<br>LD:-10°C~40°C<br>575V&690V:<br>-10°C~50°C |
| | | Standard with top cover | | IP20/ UL Type1/ NEMA1 | -10~40℃ |
| | Frame D~H<br>230V: 37kW and above<br>460V: 45kW and above<br>690V: 45kW and above | N/A | With conduit box | IP20/UL Type1/NEMA1 | -10~40℃ |
| VFDxxxxCP23A-00<br>VFDxxxxCP43A-00<br>VFDxxxxCP43B-00<br>VFDxxxxCP43C-00<br>VFDxxxxCP63A-xx | Frame D~H<br>230V: 37kW and above<br>460V: 45kW and above<br>690V: 45kW and above | N/A | No conduit box | IP00<br>IP20/UL Open Type<br> 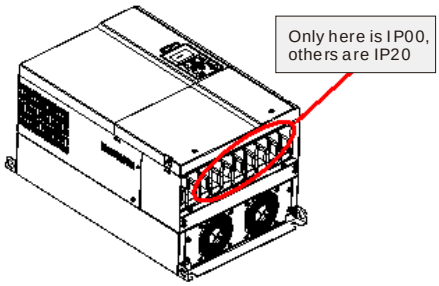 | 230V&460V:<br>ND: -10°C~ 50°C<br>LD: -10°C~40°C<br>690V:<br>-10°C~50°C |

NOTE: ND=Normal Duty; LD=Light Duty

## 9-7 Derating of Ambient Temperature and Altitude

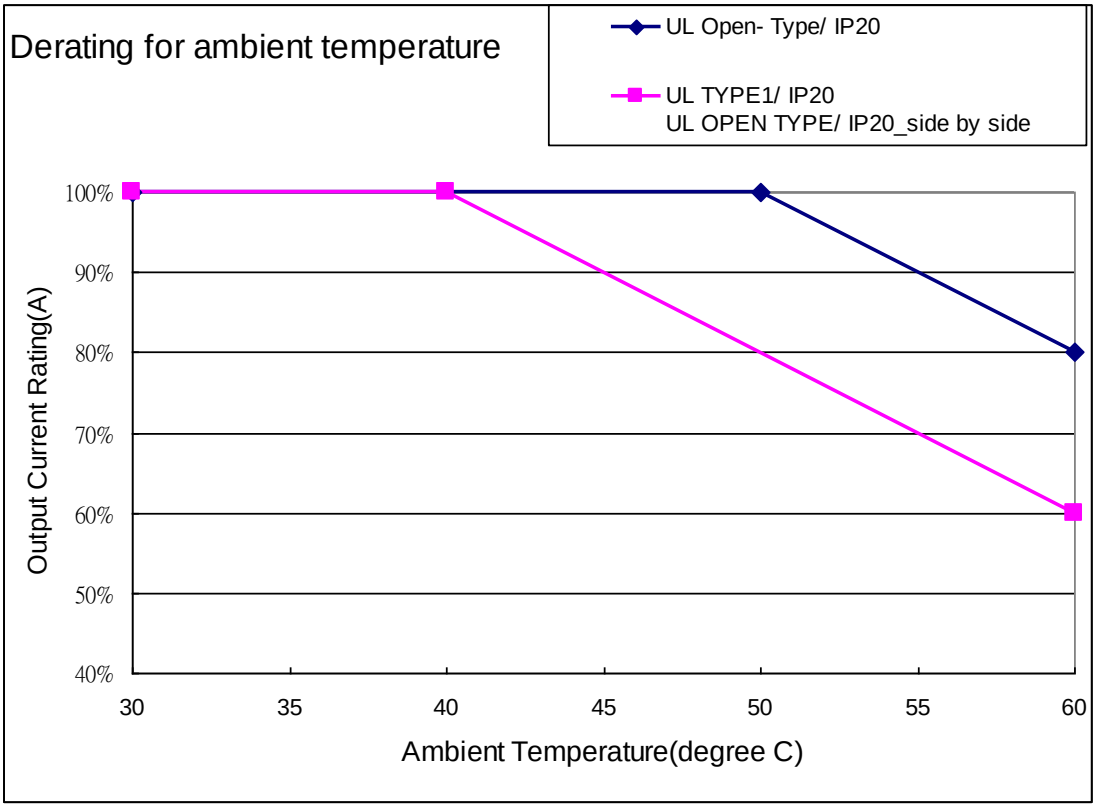


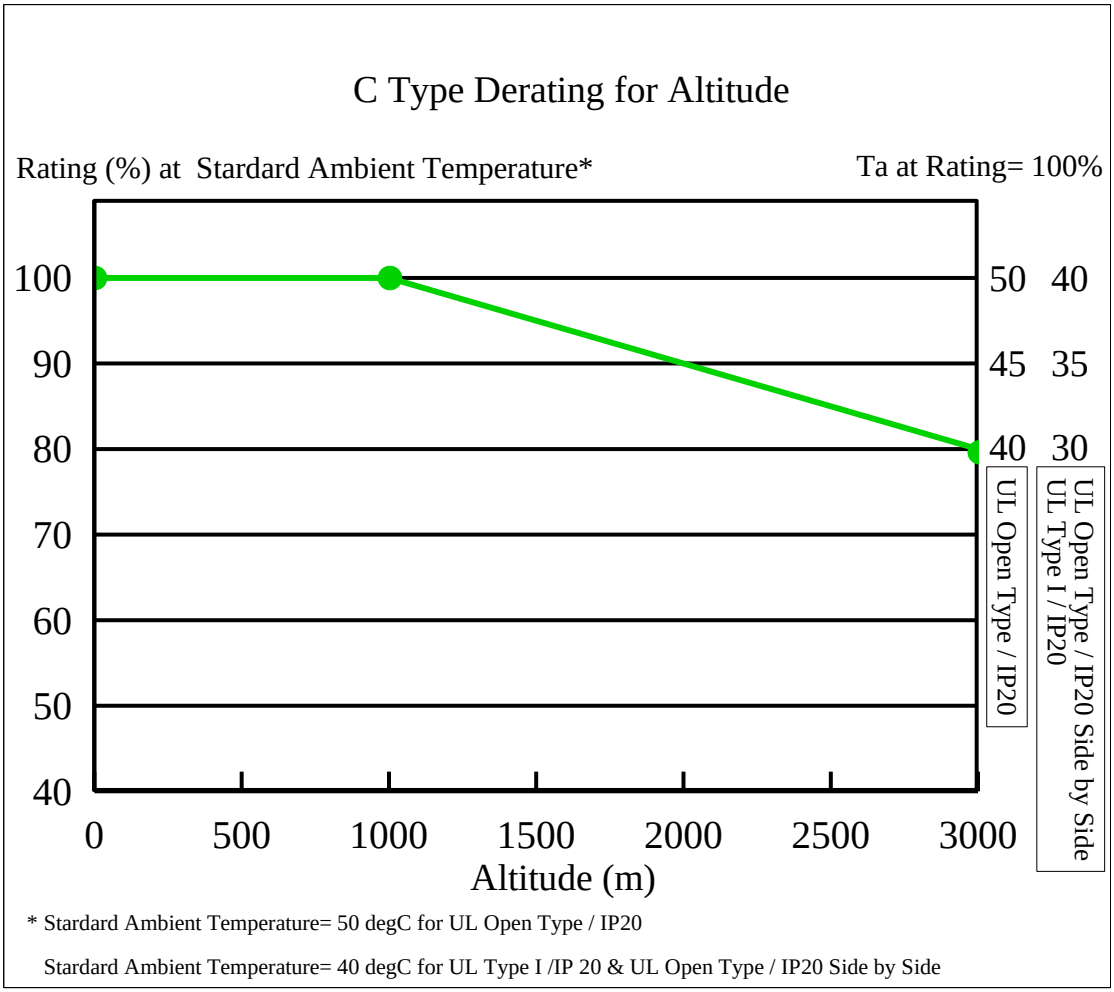

| Protection Level | Operating Environment |
|---|---|
| UL Type I / IP20 | When the AC motor drive is operating at the rated current and the ambient temperature has to be between -10℃ ~ +40℃. When the temperature is over 40℃, for every increase by 1℃, decrease 2% of the rated current. The maximum allowable temperature is 60℃. |
| UL Open Type / IP20 | When the AC motor drive is operating at the rated current and the ambient temperature has to be between -10℃ ~ +50℃. When the temperature is over 50℃, for every increase by 1℃, decrease 2% of the rated current. The maximum allowable temperature is 60℃. |
| High Altitude | If AC motor drive is installed at altitude 0~1000m, follow normal operation restriction. If it is install at altitude 1000~3000m, decrease 2% of rated current or lower 0.5℃ of temperature for every 100m increase in altitude. Maximum altitude for Corner Grounded is 2000m. Contact Delta for more information, if you need to use this motor drive at an altitude of 2000m or higher. |

[This page intentionally left blank]

# *Chapter 10 Digital Keypad*

10-1 Descriptions of Digital Keypad

10-2 Function of Digital Keypad KPC-CC01

10-3 TPEditor Installation Instruction

10-4 Fault Code Description of Digital Keypad KPC-CC01

10-5 Unsupported Functions when using TPEditior on KPC-CC01 Keypad

# 10-1 Descriptions of Digital Keypad

KPC-CC01

KPC-CE01(Option)

Communication Interface

RJ-45 (socket)、RS-485 interface;

Installation Method

1. Embedded type and can be put flat on the surface of the control box. The front cover is water proof.
2. Buy a MKC-KPPK model to do wall mounting or embedded mounting. Its protection level is IP66.
3. The maximum RJ45 extension lead is 5 m (16ft)
4. This keypad can only be used on Delta's motor drive C2000, CH2000 and CP2000.

## Descriptions of Keypad Functions

| Key | Descriptions |
|---|---|
| RUN | Start Operation Key<br>1. It is only valid when the source of operation command is from the keypad.<br>2. It can operate the AC motor drive by the function setting and the RUN LED will be ON.<br>3. It can be pressed again and again at stop process.<br>4. When enabling "HAND" mode, it is only valid when the source of operation command is from the keypad. |
| STOP RESET | Stop Command Key. This key has the highest processing priority in any situation.<br>1. When it receives STOP command, no matter the AC motor drive is in operation or stop status, the AC motor drive needs to execute "STOP" command.<br>2. The RESET key can be used to reset the drive after the fault occurs. For those faults that can't be reset by the RESET key, see the fault records after pressing MENU key for details. |
| FWD REV | Operation Direction Key<br>1. This key is only control the operation direction NOT for activate the drive. FWD: forward, REV: reverse.<br>2. Refer to the LED descriptions for more details. |
| ENTER | ENTER Key<br>Press ENTER and go to the next level. If it is the last level then press ENTER to execute the command. |
| ESC | ESC Key<br>ESC key function is to leave current menu and return to the last menu. It is also functioned as a return key in the sub-menu. |
| MENU | Press menu to return to main menu.<br>Menu content:<br>KPC-CE01 does not support function 5 ~13.<br>1. Parameter setup 7. Quick start 13. PC Link<br>2. Copy Parameter 8. Display Setup<br>3. Keypad Locked 9. Time Setup<br>4. PLC Function 10. Language Setup<br>5. Copy PLC 11. Startup Menu<br>6. Fault Record 12. Main Page |
| < ^ > v | Direction: Left/Right/Up/Down<br>1. In the numeric value setting mode, it is used to move the cursor and change the numeric value.<br>2. In the menu/text selection mode, it is used for item selection. |

| | |
|---|---|
| F1 F2<br>F3 F4 | Function Key<br>1. The functions keys have factory settings and can be defined by users. The factory settings of F1 and F4 work with the function list below. For example, F1 is JOG function, F4 is a speed setting key for adding/deleting user defined parameters.<br>2. Other functions must be defined by TPEditor first. TPEditor software V1.40 or later is available for download at: http://www.delta.com.tw/product/em/download/download_main.asp?act=3&pid=3&cid=3&tpid=3<br>3. Installation Instruction for TPEditor is on page 10-15 of this chapter. |
| HAND | HAND ON Key<br>1. This key is executed by the parameter settings of the source of Hand frequency and hand operation. The factory settings of both source of Hand frequency and hand operation are the digital keypad.<br>2. Press HAND ON key at stop status, the setting will switch to hand frequency source and hand operation source. Press HAND ON key at operation status, it stops the AC motor drive first (display AHSP warning), and switch to hand frequency source and hand operation source.<br>3. Successful mode switching for KPC-CE01, “H/A” LED will be on; for KPC-CC01, it will display HAND mode/ AUTO mode on the screen. |
| AUTO | 1. This key is executed by the parameter settings of the source of AUTO frequency and AUTO operation. The factory setting is the external terminal (source of operation is 4-20mA).<br>2. Press Auto key at stop status, the setting will switch to hand frequency source and hand operation source. Press Auto key at operation status, it stops the AC motor drive first (display AHSP warning), and switch to hand frequency source and hand operation source.<br>3. Successful mode switching for KPC-CE01, “H/A” LED will be off; for KPC-CC01, it will display HAND mode/ AUTO mode on the screen |

## Descriptions of LED Functions

<table>
<tr><th>LED</th><th>Descriptions</th></tr>
<tr><td>
</td><td>Steady ON: operation indicator of the AC motor drive, including DC brake, zero speed, standby, restart after fault and speed search.<br>Blinking: drive is decelerating to stop or in the status of base block.<br>Steady OFF: drive doesn’t execute the operation command</td></tr>
<tr><td>
</td><td>Steady ON: stop indicator of the AC motor drive.<br>Blinking: drive is in the standby status.<br>Steady OFF: drive doesn’t execute “STOP” command.</td></tr>
<tr><td>
</td><td>Operation Direction LED<br>1. Green light is on, the drive is running forward.<br>2. Red light is on, the drive is running backward.<br>3. Twinkling light: the drive is changing direction.</td></tr>
<tr><td>
</td><td>(Only KPC-CE01 support this function)<br>Setting can be done during operation.<br>HAND LED: When HAND LED is on (HAND mode); when HAND LED is off (AUTO mode).</td></tr>
<tr><td>
</td><td>(Only KPC-CE01Support this function )<br>Setting can be done during operation.<br>AUTO LED: when AUTO LED is on (AUTO mode); when AUTO LED is off (HAND mode).</td></tr>
<tr><td>CANopen ~”RUN”</td><td>RUN LED:
<table>
<tr><th>LED status</th><th>Condition/State</th></tr>
<tr><td>OFF</td><td>CANopen at initial<br>LED steady off</td></tr>
<tr><td>Blinking</td><td>CANopen at pre-operation<br> 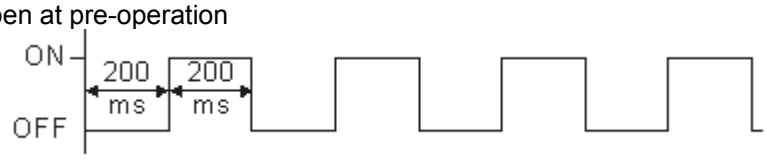
</td></tr>
<tr><td>Single flash</td><td>CANopen at stopped<br> 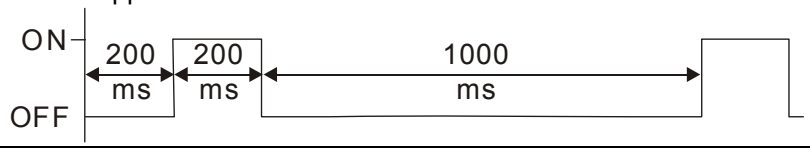
</td></tr>
<tr><td>ON</td><td>CANopen at operation status<br>LED steady on</td></tr>
</table></td></tr>
<tr><td>CANopen ~”ERR”</td><td>ERR LED:
<table>
<tr><th>LED status</th><th>Condition/ State</th></tr>
<tr><td>OFF</td><td>No Error</td></tr>
<tr><td>Single flash</td><td>One message fail<br> 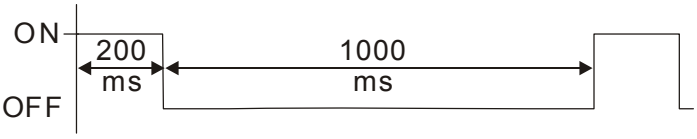
</td></tr>
<tr><td>Double flash</td><td>Guarding fail or heartbeat fail<br> 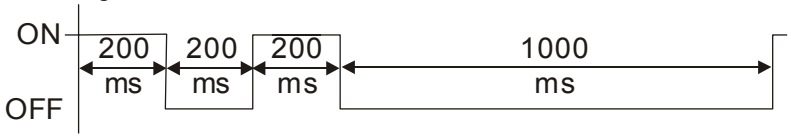
</td></tr>
<tr><td>Triple flash</td><td>SYNC fail<br> 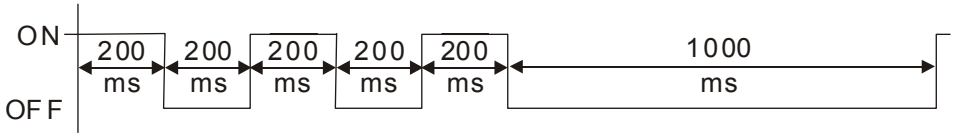
</td></tr>
<tr><td>ON</td><td>Bus off</td></tr>
</table></td></tr>
</table>

## 10-2 Function of Digital Keypad KPC-CC01

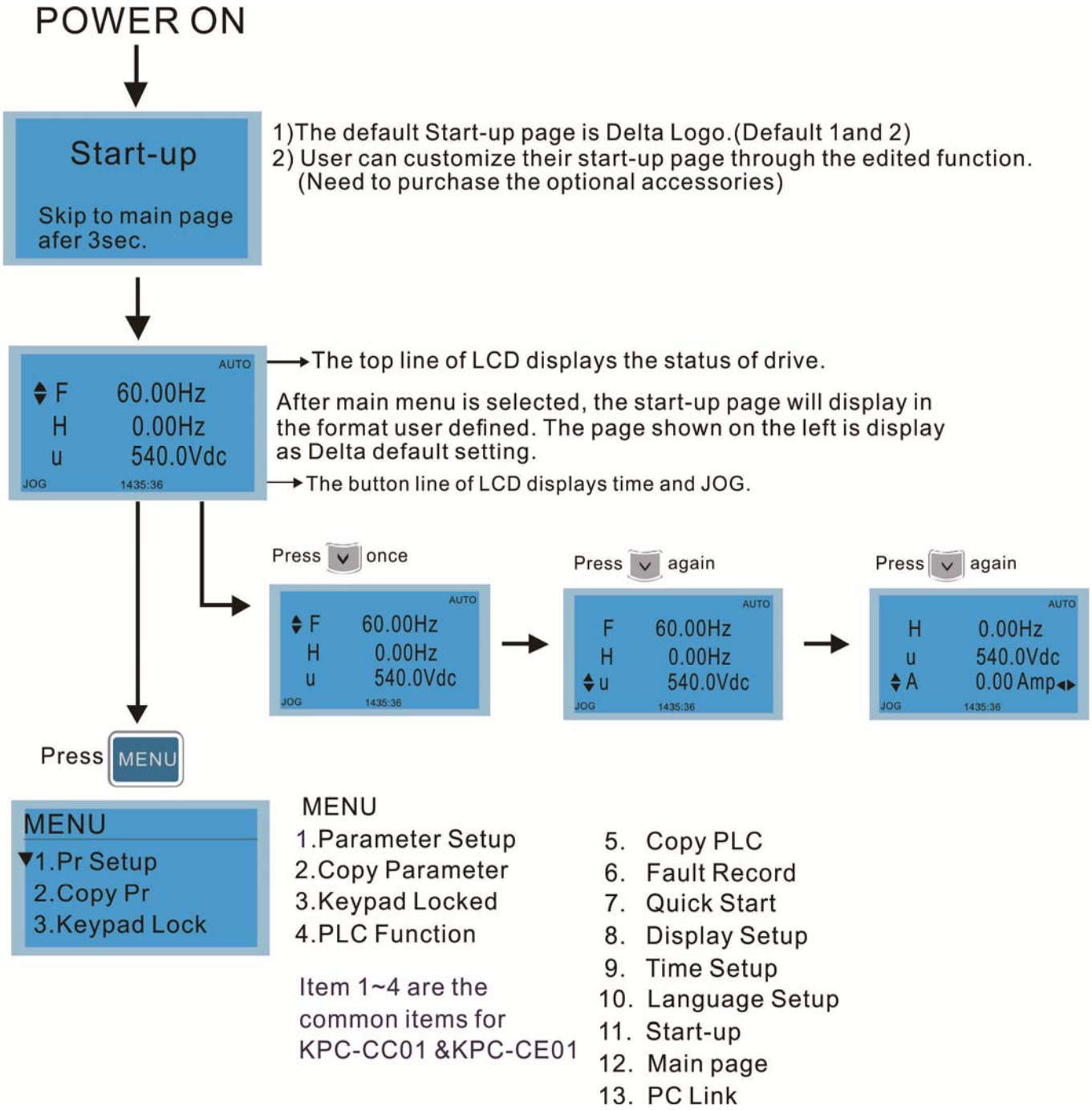


**NOTE**

1. Startup page can only display pictures, no flash.
2. When Power ON, it will display startup page then the main page. The main page displays Delta's default setting F/H/A/U, the display order can be set by Pr.00.03 (Startup display). When the selected item is U page, use left key and right key to switch between the items, the display order of U page is set by Pr.00.04 (User display).

## 3. Display Icon

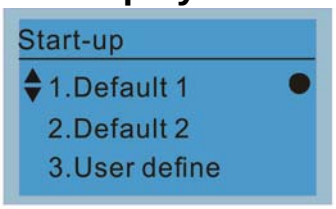


● : present setting

▲▼ : roll down the page for more options

Press ^ v for more options.

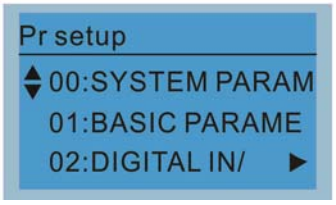


▶ : show complete sentence

Press < > for complete information

## Display item

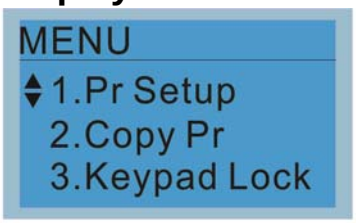


Item 1~4 are the common items for KPC-CC01 &KPC-CE01

MENU
1.Parameter Setup
2.Copy Parameter
3.Keypad Locked
4.PLC Function
5. Copy PLC
6. Fault Record
7. Quick Start
8. Display Setup
9. Time Setup
10. Language Setup
11. Start-up
12. Main page
13. PC Link

1. Parameter Setup

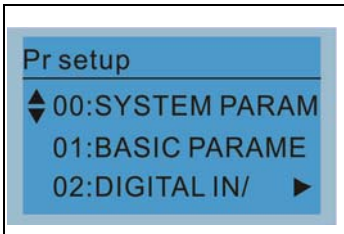


Press ENTER to select.

Press ^ v to select a parameter group.

Once a parameter group is selected, press ENTER to go into that group.

For example: Setup source of master frequency command.

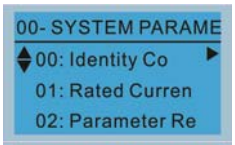


Once in the Group 00 Motor Drive Parameter, Use Up/Down key to select parameter 20: Auto Frequency Command.

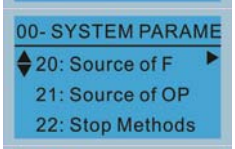


When this parameter is selected, press ENTER key to go to this parameter's setting menu.

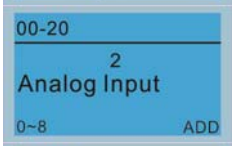


Use Up/Down key to choose a setting.
For example: Choose "2 Analogue Input, then press the ENTER key.

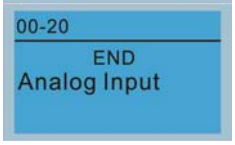


After pressing the ENTER key, an END will be displayed which means that the parameter setting is done.

2. Copy Parameter

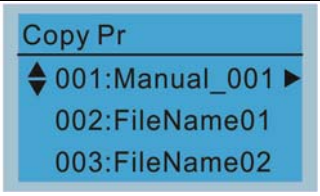


Press ENTER key to go to 001~004: content storage

4 duplicates are provided

The steps are shown in the example below.

Example: Saved in the motor drive.

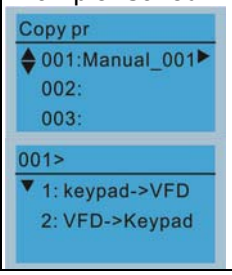


1 Go to Copy Parameter

2 Select the parameter group which needs to be copied and press ENTER key.

1 Select 1: Save in the motor drive.

2. Press ENTER key to go to "Save in the motor drive" screen.

<table>
<tr><td></td><td>
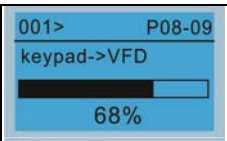

Begin to copy parameters until it is done.<br>
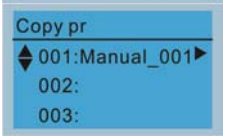

Once copying parameters is done, keypad will automatically be back to this screen.<br>
Example: Saved in the keypad.<br>
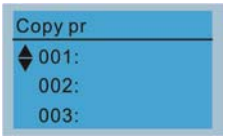

1. Once copying parameters is done, keypad will automatically be back to this screen.<br>
2. Select the parameter group which needs to be copied and press ENTER key.<br>

Press ENTER key to go to “Save in the motor drive” screen.<br>

Use Up/Down key to select a symbol.<br>
Use Left/Right key to move the cursor to select a file name.<br>
String & Symbol Table:<br>
！” ＃＄％&’ （）＊＋，－．／０１２３４５６７８９：；＜＝＞？@ＡＢＣＤＥＦＧＨＩＪＫＬＭＮＯＰＱＲＳＴＵＶＷＸＹＺ〔＼〕＾＿ ‘ａｂｃｄｆｇｈｉｊｋｌｍｎｏｐｑｒｓｔｕｖｗｘｙｚ｛｜｝～<br>
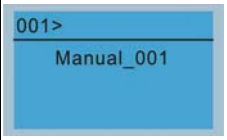

Once the file name is confirmed, press ENTER key.<br>
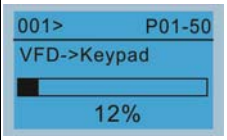

To begin copying parameters until it is done.<br>
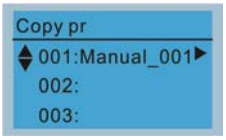

When copying parameters is completed, keypad will automatically be back to this screen.<br>
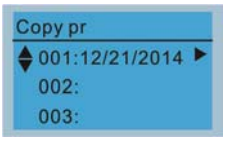

Press Right key to see the date of copying parameters.<br>
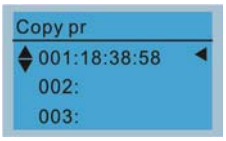

Press Right key to see the time of copying parameters.
</td></tr>
</table>

3. Keypad locked

<table>
<tr><td>

</td><td>Keypad Locked<br><br>This function is used to lock the keypad. The main page would not display “keypad locked” when the keypad is locked, however it will display the message”please press ESC and then ENTER to unlock the keypad” when any key is pressed.</td></tr>
</table>

| | |
|---|---|
| | When the keypad is locked, the main screen doesn't display any status to show that.<br> 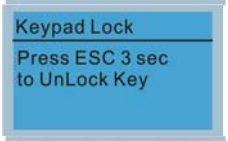 Press any key on the keypad; a screen as shown in image on the left will be displayed.<br> If ESC key is not pressed, the keypad will automatically be back to this screen.<br> 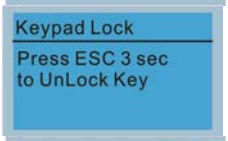 The keypad is still locked at this moment. By pressing any key, a screen as shown in the image on the left will still be displayed.<br> Press ESC for 3 seconds to unlock the keypad and the keypad will be back to this screen. Then each key on the keypad is functional.<br>Turn off the power and turn on the power again will not lock keypad. |

4. PLC Function

| | |
|---|---|
| 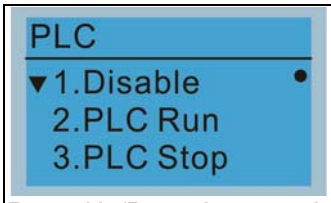 <br>Press Up/Down key to select a PLC's function.<br>Then press ENTER. | When activate and stop PLC function, the PLC status will be displayed on main page of Delta default setting.<br> 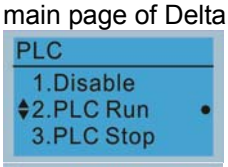 Option 2: Enable PLC function<br> Factory setting on the main screen displays PLC/RUN status bar.<br> 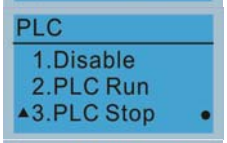 Option 3: Disable PLC function<br> Factory setting on the main screen displays PLC/STOP status bar<br> 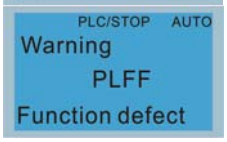 If the PLC program is not available in the control board, PLFF warning will be displayed when choosing option 2 or 3.<br>In this case, select option 1: No Function to clear PLFF warning.<br>The PLC function of KPC-CE01 can only displays:<br>1. PLC0<br>2. PLC1<br>3. PLC2 |

5. Copy PLC

| | |
|---|---|
| 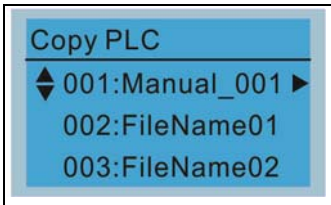 | 4 duplicates are provided<br>The steps are shown in the example below.<br>Example: Saved in the motor drive.<br> 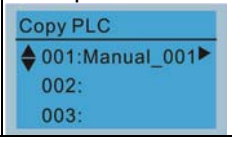 1 Go to Copy PLC<br>2 Select a parameter group to copy then press ENTER |

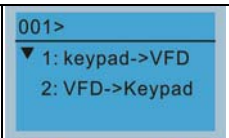


1 Select 1: Save in the motor drive.
2. Press ENTER key to go to “Save in the motor drive” screen.

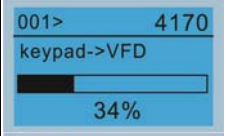


Begin to copy PLC until it is done.

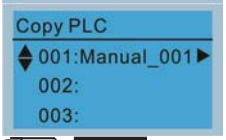


Once copying PLC is done, keypad will automatically be back to this screen.

**NOTE**

If “Option 1: Save in the motor drive” is selected, verify if the PLC program is built-in to KPC-CC01 keypad. If PLC program is not available in the keypad while “Option 1: Save in the motor drive” is selected, an “ERR8 Warning: Type not matching” will be display on the screen.

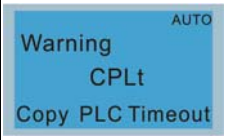


Unplug and plug back the keypad while copying the PLC program will have a CPLt warning.

Example: Saved in the keypad.

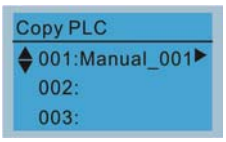


1. Once copying PLC is done, keypad will automatically be back to this screen.
2. Select the parameter group which needs to be copied and press ENTER key.

Press ENTER key to go to “Save in the motor drive” screen.

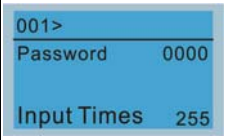


If WPLSoft editor is installed and password is set, enter the password to save the file onto digital display.

Use Up/Down key to select a symbol.
Use Left/Right key to move the cursor to select a file name.

String & Symbol Table:
！” ＃＄％＆’ （）＊＋，－．／０１２３４５６７８９：；＜＝＞？@Ａ
ＢＣＤＥＦＧＨＩＪＫＬＭＮＯＰＱＲＳＴＵＶＷＸＹＺ〔＼〕＾＿ ‘ａｂ
ｃｄｆｇｈｉｊｋｌｍｎｏｐｑｒｓｔｕｖｗｘｙｚ｛｜｝～

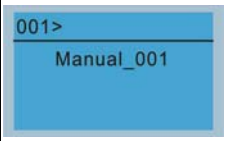


Once the file name is confirmed, press ENTER key.

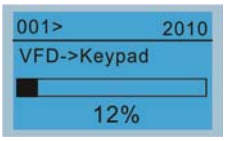


To begin copying parameters until it is done.

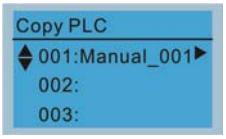


When copying parameters is completed, keypad will automatically be back to this screen.

| | |
|---|---|
| | Copy PLC<br>001:12/21/2014<br>002:<br>003:<br>Press Right key to see the date of copying parameters.<br><br>Copy PLC<br>001:18:38:58<br>002:<br>003:<br>Press Right key to see the time of copying parameters. |

6. Fault record

| | |
|---|---|
| Fault record<br>▼1:oL<br>2:ovd<br>3:GFF<br><br>Press ENTER to select.<br><br>KPC-CE01 does not support this function. | Able to store 6 error code (Keypad V1.02 and previous versions)<br>Able to store 20 error code(Keypad V1.03 and later version)<br>The most recent error record is shown as the first record. Select an error record to see its detail such as date, time, frequency, current, voltage, DCBUs voltage)<br><br>Fault record<br>▼1:oL<br>2:ovd<br>3:GFF<br>Press Up/Down key to select an error record.<br>After selecting an error code, press ENTER to see that error record's detail<br><br>1: oL<br>Current: 79.57<br>Voltage: 189.2<br>BUS Voltage:409.5<br>1: oL<br>Date: 01/20/2014<br>Time: 21:02:24<br>Outfreq: 32.61<br>Press Up/Down key to see an error record's detail such as date, time, frequency, current, voltage, DCBus voltage.<br><br>Fault record<br>1:oL<br>2:ovd<br>3:GFF<br>Press Up/Down key to select an error record.<br>After selecting an error code, press ENTER to see that error record's detail<br><br>2: ovd<br>Current: 79.57<br>Voltage: 189.2<br>BUS Voltage:409.5<br>2: ovd<br>Date: 01/20/2014<br>Time: 21:02:24<br>Outfreq: 32.61<br>Press Up/Down key to see an error record's detail such as date, time, frequency, current, voltage, DCBus voltage.<br><br>NOTE<br>Fault actions of AC motor drive are record and save to KPC-CC01. When KPC-CC01 is removed and apply to another AC motor drive, the previous fault records will not be deleted. The new fault records of the present AC motor drive will accumulate to KPC-CC01. |

7. Quick Start

| | |
|---|---|
| Quick Start<br>▼1: V/F Mode<br>2: VFPG Mode<br>3: SVC Mode<br><br>Press ENTER to select. | Description:<br>1. VF Mode<br><br>V/F Mode :P00-07<br>01:Password De<br>02:Password Inp<br>03:Control Meth<br><br>Items<br>1. Parameter Protection Password Input (P00-07)<br>2. Parameter Protection Password Setting (P00-08)<br>3. Control Mode (P00-10) |

| | |
|---|---|
| Quick Start:<br>1. V/F Mode<br>2. SVC Mode<br>3. My Mode | 01:Password Decoder<br> 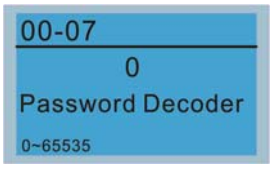 <br><br>4. Control of Speed Mode (P00-11)<br>5. Load Selection (P00-16)<br>6. Source of the Master Frequency Command (AUTO) (P00-20)<br>7. Source of the Operation Command (AUTO) (P00-21)<br>8. Stop Method (P00-22)<br>9. Digital Keypad STOP function (P00-32)<br>10. Max. Operation Frequency (P01-00)<br>11. Base Frequency of Motor 1 (P01-01)<br>12. Max. Output Voltage Setting of Motor 1 (P01-02)<br>13. Min. Output Frequency of Motor 1 (P01-07)<br>14. Min. Output Voltage of Motor 1 (P01-08)<br>15. Output Frequency Upper Limit (P01-10)<br>16. Output Frequency Lower Limit (P01-11)<br>17. Accel. Time 1 (P01-12)<br>18. Decel Time 1 (P01-13)<br>19. Over-voltage Stall Prevention (P06-01)<br>20. Software Brake Level (P07-00)<br>21. Filter Time of Torque Command (P07-24)<br>22. Filter Time of Slip Compensation (P07-25)<br>23. Slip Compensation Gain (P07-27) |
| | 2. SVC Mode<br> 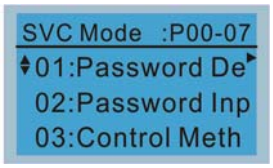 <br><br>01: Password Decoder<br> 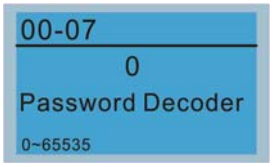 <br><br>Items<br>1. Parameter Protection Password Input (P00-07)<br>2. Parameter Protection Password Setting (P00-08)<br>3. Control Mode (P00-10)<br>4. Control of Speed Mode (P00-11)<br>5. Load Selection (P00-16)<br>6. Carrier Frequency (P00-17)<br>7. Source of the Master Frequency Command (AUTO) (P00-20)<br>8. Source of the Operation Command (AUTO) (P00-21)<br>9. Stop Method (P00-22)<br>10. Digital Keypad STOP function (P00-32)<br>11. Max. Operation Frequency (P01-00)<br>12. Base Frequency of Motor 1 (P01-01)<br>13. Max. Output Voltage Setting of Motor 1 (P01-02)<br>14. Min. Output Frequency of Motor 1 (P01-07)<br>15. Min. Output Voltage of Motor 1 (P01-08)<br>16. Output Frequency Upper Limit (P01-10)<br>17. Output Frequency Lower Limit (P01-11)<br>18. Accel. Time 1 (P01-12)<br>19. Decel. Time 1 (P01-13)<br>20. Full-load Current of Induction Motor 1 (P05-01)<br>21. Rated Power of Induction Motor 1 (P05-02)<br>22. Rated Speed of Induction Motor 1 (P05-03)<br>23. Pole Number of Induction Motor 1 |

(P05-04)

24. No-load Current of Induction Motor 1 (P05-05)
25. Over-voltage Stall Prevention (P06-01)
26. Over-current Stall Prevention during Acceleration (P06-03)
27. Derating Protection (P06-55)
28. Software Brake Level (P07-00)
29. Emergency Stop (EF) & Force to Stop Selection (P07-20)
30. Filter Time of Torque Command (P07-24)
31. Filter Time of Slip Compensation (P07-25)
32. Slip Compensation Gain (P07-27)

3. My Mode

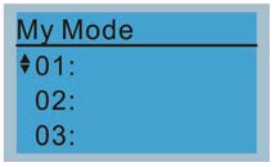


Click F4 in parameter setting page, the parameter will save to My Mode. To delete or correct the parameter, enter this parameter and click the “DEL” on the bottom right corner.

Items

It can save 01~32 sets of parameters (Pr).

Setup process

1. Go to Parameter Setup function. Press ENTER to go to the parameter which you need to use. There is an ADD on the bottom right-hand corner of the screen. Press F4 on the key pad to add this parameter to My Mode

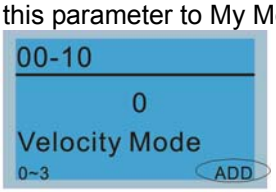


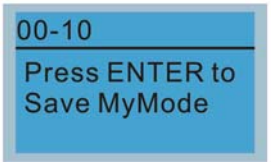


2. The parameter (Pr) will be displayed in My mode if it is properly saved. To correct or to delete this Pr. clicks DEL.

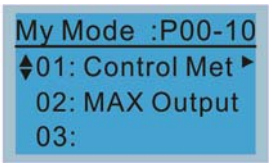


3. To delete a parameter, go to My Mode and select a parameter which you need to delete. Press ENTER to enter the parameter setting screen. There is a DEL on the bottom left-hand corner of the screen. Press F4 on the keypad to delete this parameter from My Mode.

| | |
|---|---|
| | 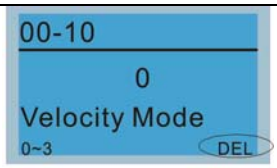 <br> 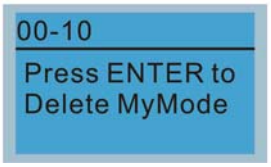 <br>4. After pressing ENTER to delete <01 Control Mode>, the <02 Maximum Operating Frequency > will automatically replace <01 Control Mode>.<br> 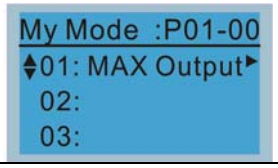 |

8. Display setup

| | |
|---|---|
| <br>Press ENTER to setting menu. | 1. Contrast<br> 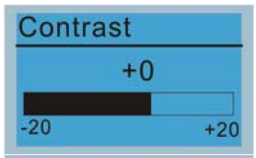 <br>Use Up/Down key to adjust the setting value.<br> <br>After selecting a setting value. Press ENTER to see screen's display after contrast is adjusted to be +10.<br> 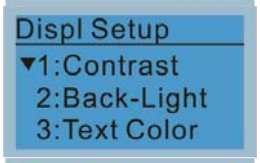 <br>When the setting value is 0 Min, the back light will be steady on.<br> <br>Then press ENTER.<br> 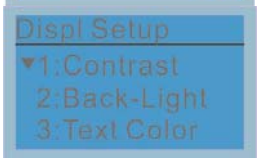 <br>After select a setting value Press ENTER to see screen's display result after contrast is adjusted to be -10.<br>2. Back-light<br> 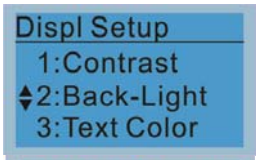 <br>Press ENTER to go to Back Light Time Setting screen.<br> <br>Use Up/Down key to adjust the setting value.<br> 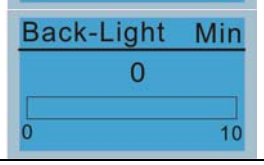 <br>When the setting value is 0 Min, the back light will be steady on. |

| | | |
|---|---|---|
| | Displ Setup<br>1:Contrast<br>2:Back-Light<br>3:Text Color | When the setting value is 10 Min, the backlight will be off in 10 minutes. |

9. Time setting

| | | |
|---|---|---|
| Time setup<br>2009/01/01<br>_ _ : _ _ : _ _<br>Use Left/Right key to select Year, Month, Day, Hour, Minute or Second to set up | Time Setup<br>2014/01/01<br>00 : 00 : 00 | Use Up/Down key to set up Year |
| | Time Setup<br>2014/01/01<br>00 : 00 : 00 | Use Up/Down key to set up Month |
| | Time Setup<br>2014/01/01<br>00 : 00 : 00 | Use Up/Down key to set up day |
| | Time Setup<br>2014/01/01<br>21 : 00 : 00 | Use Up/Down key to set up hour |
| | Time Setup<br>2014/01/01<br>21 : 12 : 00 | Use Up/Down key to set up Minute |
| | Time Setup<br>2014/01/01<br>21 : 12 : 14 | Use Up/Down key to set up Second |
| | Time Setup<br>END | After setting up, press ENTER to confirm the setup. |
| | NOTE<br>When the digital keypad is removed, the time setting will be in standby status for 7 days. After this period, the time needs to be reset. | |

10. Language setup

| | |
|---|---|
| Language<br>1:English<br>2:繁體中文<br>3:简体中文<br>Use Up/Down key to select language, than press ENTER. | Language setting option is displayed in the language of the user's choice.<br>Language setting options:<br>1. English 5. Русский<br>2. 繁體中文 6. Espanol<br>3. 简体中文 7. Portugues<br>4. Turkce 8. français |

11. Startup-up

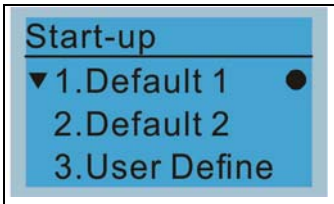


1. Default 1 DELTA LOGO

2. Default 2 DELTA Text

3. User Defined: optional accessory is require (TPEditor & USB/RS-485 Communication Interface-IFD6530)

Install an editing accessory would allow users to design their own start-up page. If editor accessory is not installed, “user defined” option will display a blank page.

USB/RS-485 Communication Interface-IFD6530

Please refer to Chapter 07 Optional Accessories for more detail.

TPEditor

Go to Delta’s website to download TPEditor V1.40 or later versions.
http://www.delta.com.tw/product/em/download/download_main.asp?act=3&pid=3&cid=3&tpid=3

12. Main page

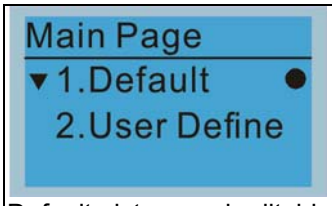


Default picture and editable picture are available upon selection.

Press ENTER to select.

1. Default page

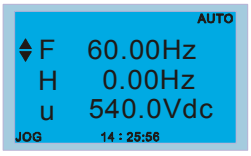


F 600.00Hz >>> H >>> A >>> U (circulate)

2. User Defined: optional accessory is require (TPEditor & USB/RS-485 Communication Interface-IFD6530)

Install an editing accessory would allow users to design their own start-up page. If editor accessory is not installed, “user defined” option will display a blank page.

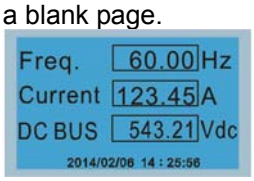


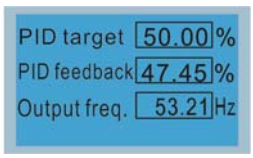


USB/RS-485 Communication Interface-IFD6530

Please refer to Chapter 07 Optional Accessories for more detail.

TPEditor

Go to Delta’s website to download TPEditor V1.40 or later versions.
http://www.delta.com.tw/product/em/download/download_main.asp?act=3&pid=3&cid=3&tpid=3

## 13. PC Link

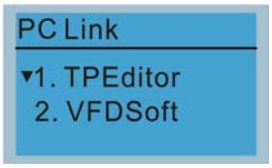


1. TPEditor: This function allows users to connect the keypad to a computer then to download and edit user defined pages.

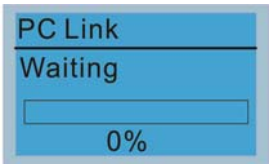


Click ENTER to go to <Waiting to connect to PC>

In TPEditor, choose <Communication>, then choose “Write to HMI”

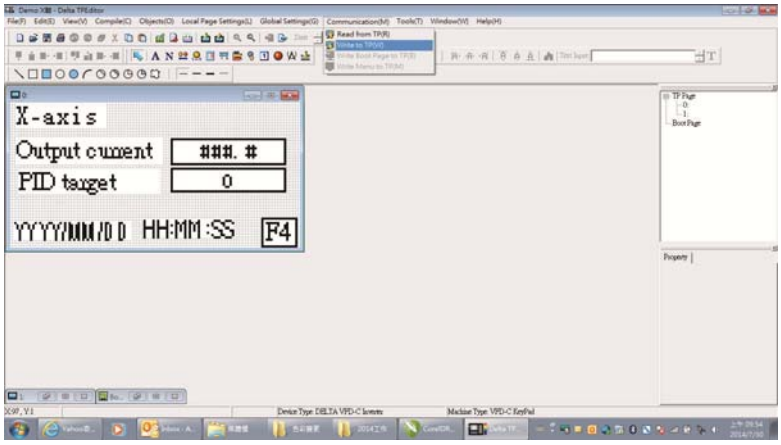


Choose <YES> in the <Confirm to Write> dialogue box.

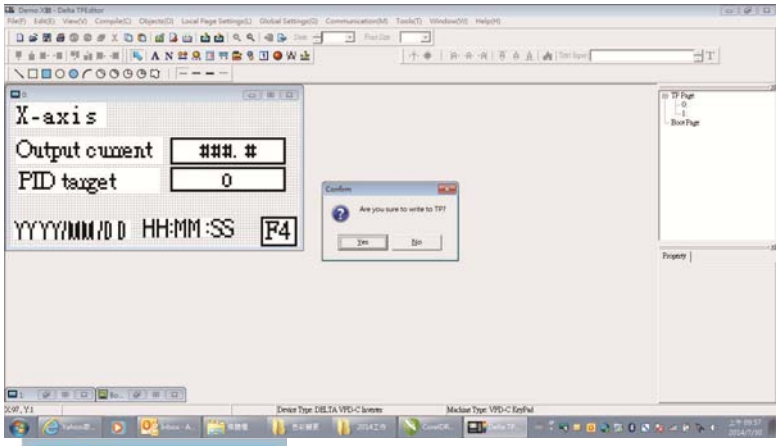


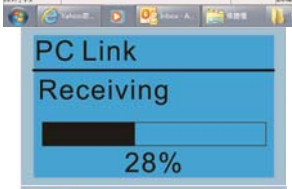


Start downloading pages to edit KPC-CC01.

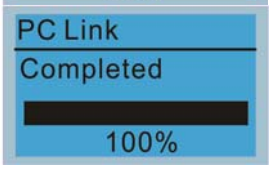


Download completed

2. VFDSoft: this function allows user to link to the VFDSoft Operating software then to upload data

Copy parameter 1~4 in KPC-CC01

Connect KPC-CCO1 to a computer

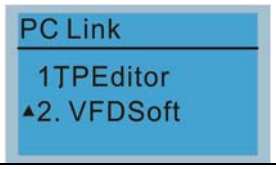


Start downloading pages to edit to KPC-CC01

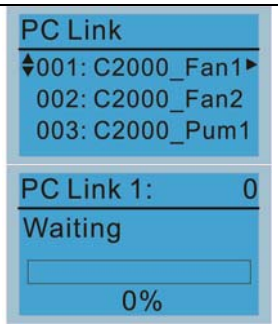


Use Up/Down key to select a parameter group to upload to VFDSoft.
Press ENTER

Waiting to connect to PC

Open VFDSoft, choose <Parameter Manager function>

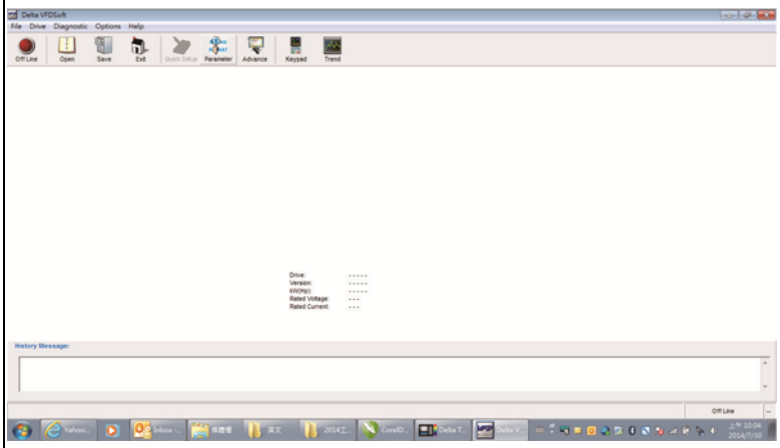

In Parameter Manager, choose <Load parameter table from KPC-CC01>

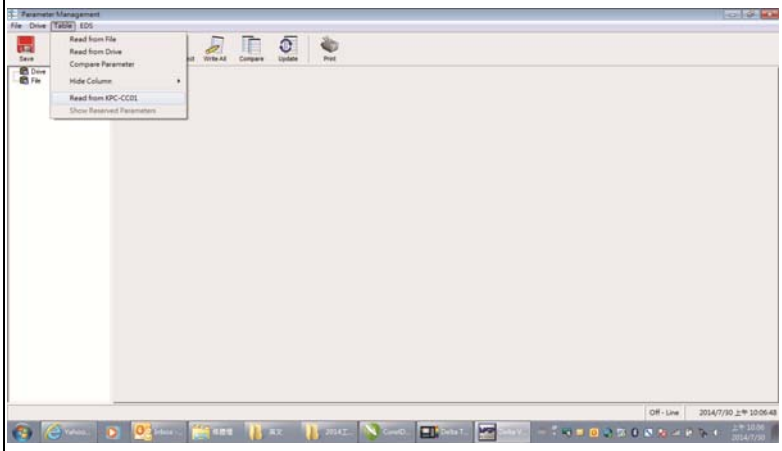

Choose the right communication port and click OK

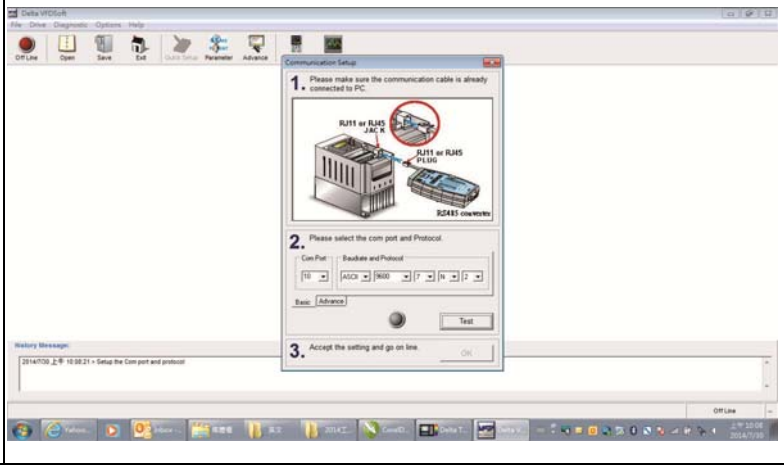

| | |
|---|---|
| | 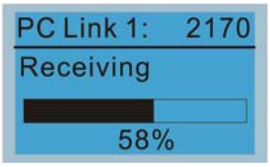 Start to upload parameters to VFDSoft<br><br> 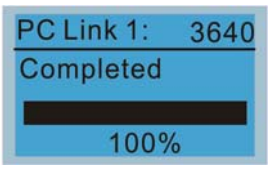 Uploading parameter is completed<br><br>Before using the user defined starting screen and user defined main screen, the starting screen setup and the main screen setup have to be preset as user defined.<br>If the user defined page is not downloaded to KPC-CC01, the starting screen and the main screen will be blank. |

## Other display

When fault occur, the menu will display:

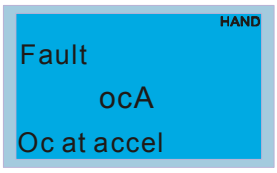


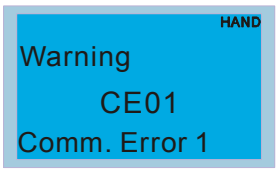


1. Press ENTER and start RESET. If still no response, please contact local distributor or return to the factory. To view the fault DC BUS voltage, output current and output voltage, press “MENU”→“Fault Record”.
2. Press ENTER again, if the screen returns to main page, the fault is clear.
3. When fault or warning message appears, backlight LED will blinks until the fault or the warning is cleared.

## Optional accessory: RJ45 Extension Lead for Digital Keypad

| Part No. | Description |
|---|---|
| CBC-K3FT | RJ45 extension lead, 3 feet (approximately 0.9m) |
| CBC-K5FT | RJ45 extension lead, 5 feet (approximately 1.5 m) |
| CBC-K7FT | RJ45 extension lead, 7 feet (approximately 2.1 m) |
| CBC-K10FT | RJ45 extension lead, 10 feet (approximately 3 m) |
| CBC-K16FT | RJ45 extension lead, 16 feet (approximately 4.9 m) |

Note: When you need to buy communication cables, buy non-shielded, 24 AWG, 4 twisted pair, 100 ohms communication cables.

## 10-3 TPEditor Installation Instruction

TPEditor can edit up to 256 HMI (Human-Machine Interface) pages with a total storage capacity of 256kb. Each page can edit 50 normal objects and 10 communication objects.

1) TPEditor: Setup & Basic Functions

1. Run TPEditor V1.40 or later versions.

2. Go to File (F) →Click on New. The Window below will pop up. At the device type, click on the drop down menu and choose DELTA VFD-C Inverter. At the TP type, click on the drop down menu and choose VFD-C Keypad. As for File Name, enter TPE0. Now click on OK.

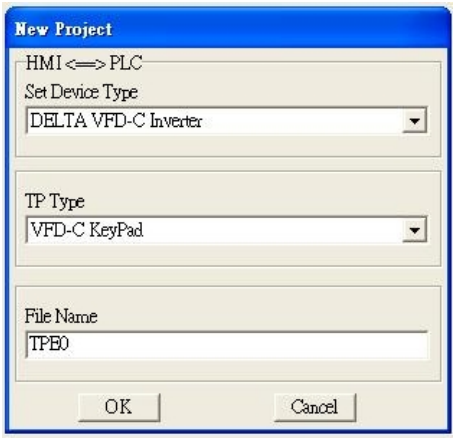


3. You are now at the designing page. Go to Edit (E) →Click on Add a New Page (A) or go to the TP page on the upper right side, right click once on TP page and choose Add to increase one more page for editing. The current firmware of Keypad is version1.00 and can support up to 4 pages.

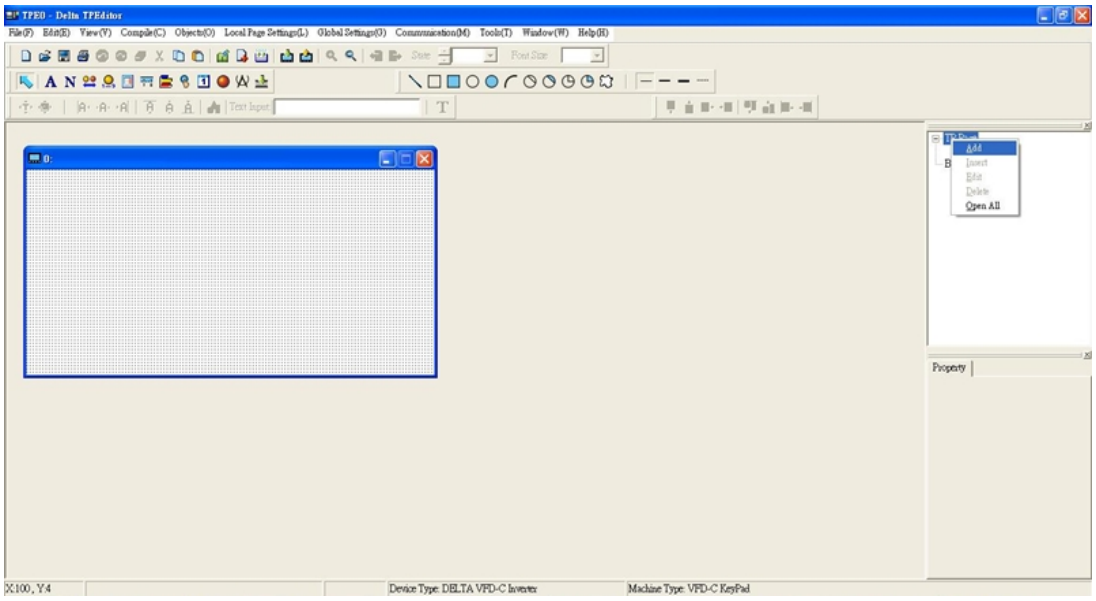

4. Edit Startup Page

5. Static Text . Open a blank page, click once on this button , and then double click on that blank page. The following windows will pop up.

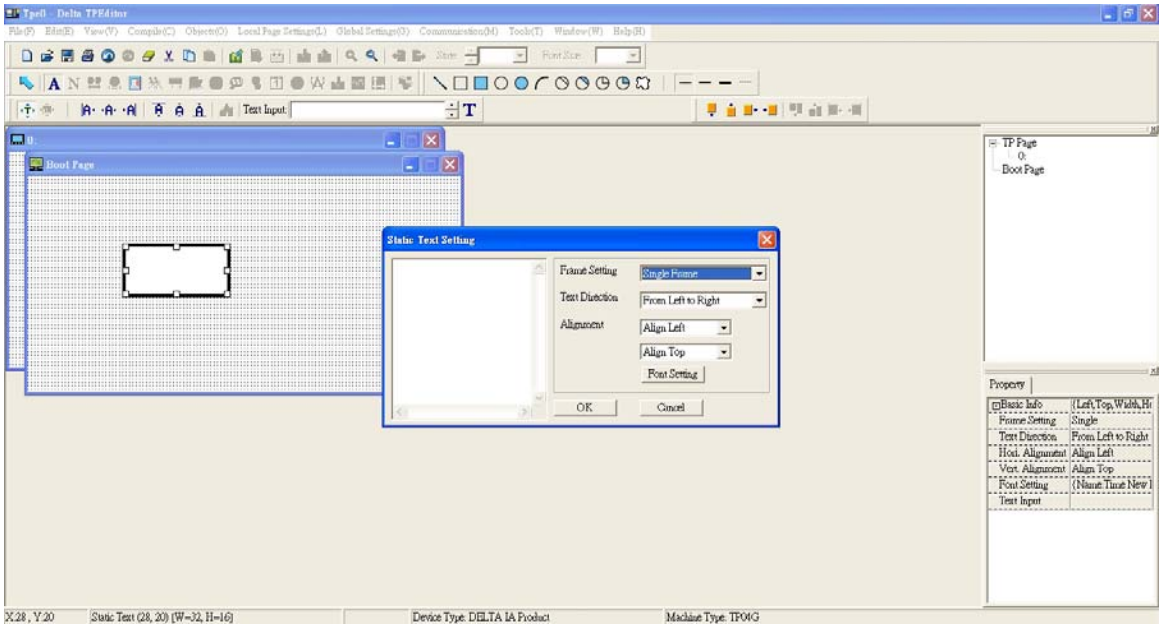


6. Static Bitmap →Open a blank page, then click once on this button and then double click on that blank page. The following window will pop up.

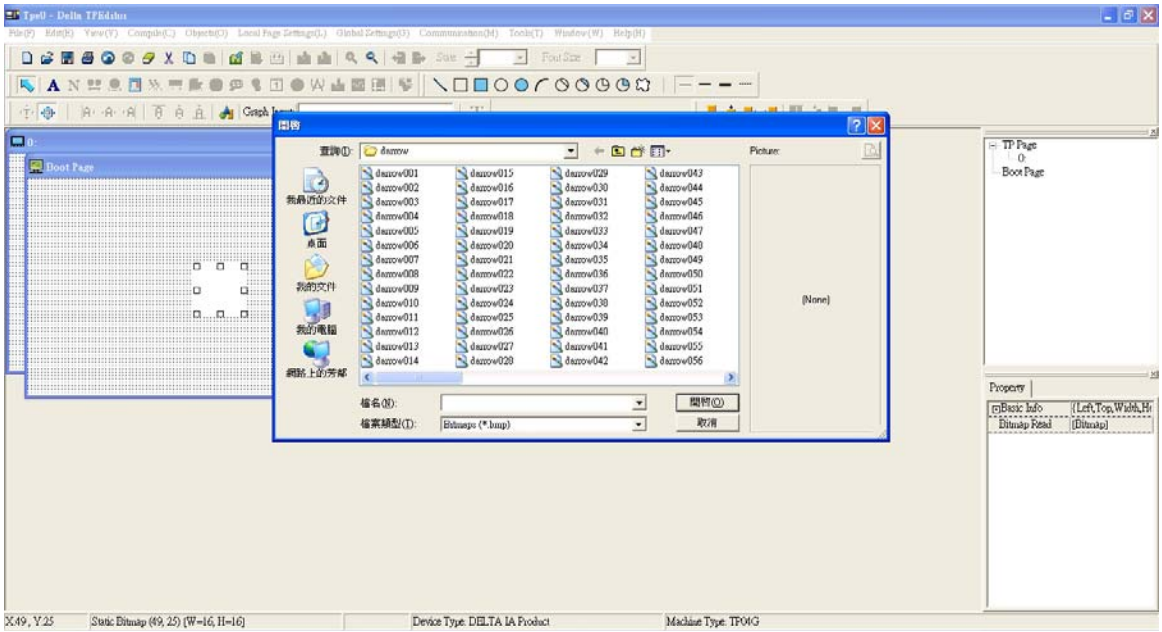


Please note that Static Bitmap setting support only images in BMP format. Now choose an image that you need and click open, then that image will appear in the Static Bitmap window.

7. Geometric Bitmap → As shown in the picture on the left side, there are 11 kinds of geometric bitmap to choose. Open a new blank page then click once on a geometric bitmap icon that you need. Then drag that icon and enlarge it to the size that you need on that blank page.

8. Finish editing the keypad starting screen and select **Communication>Input User Defined Keypad Starting Screen.**

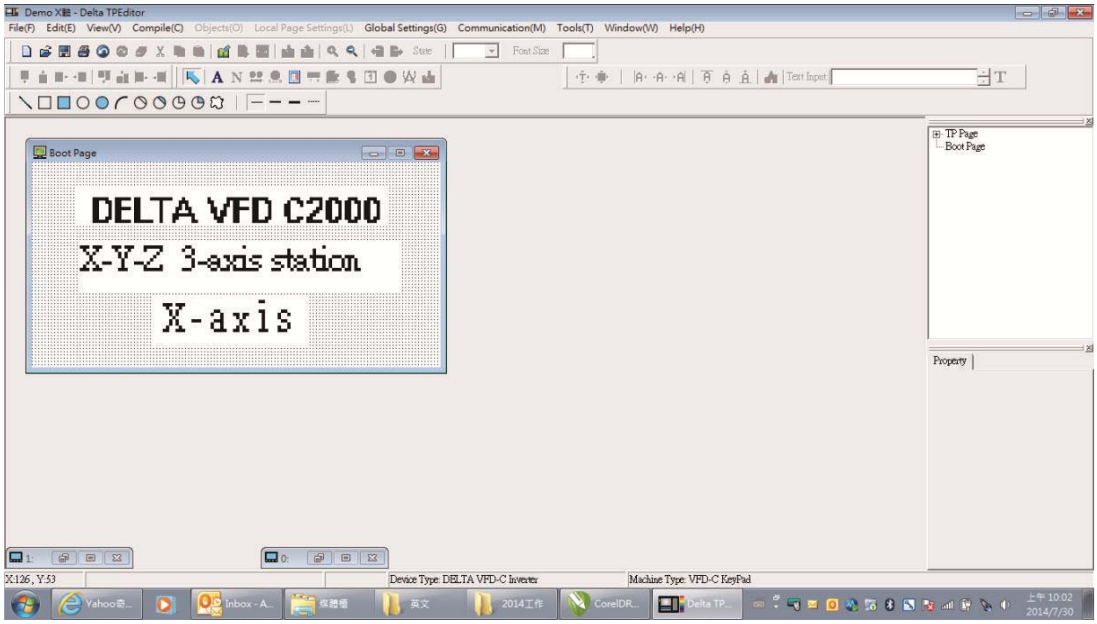


9. Downloading setting: Go to Tool > Communication. Set up communication port and speed of IFD6530.

10. Only three speed selections are available: 9600 bps, 19200 bps and 38400 bps.

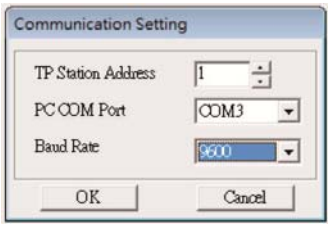


11. When a dialogue box displayed on the screen asking to confirm writing or not, press buttons on the keypad to go to MENU, select PC LINK and then press ENTER and wait for few seconds. Then select YES on the screen to start downloading.

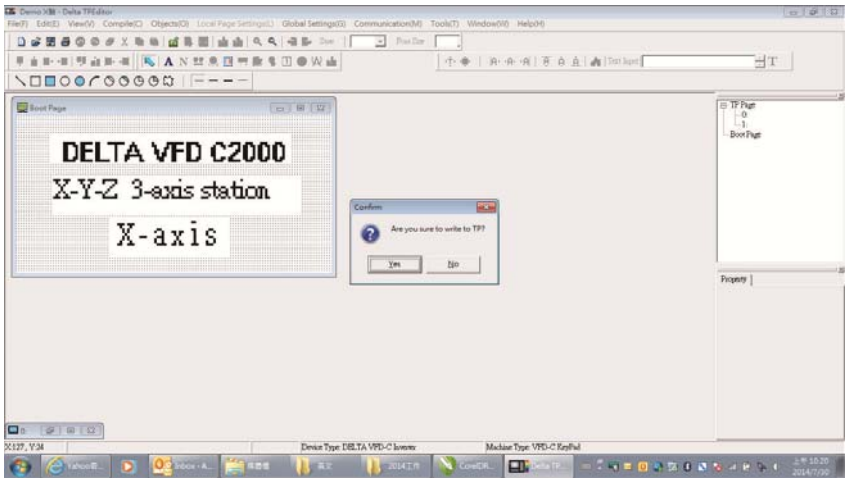

2) Edit Main Page & Example of Download

1. Go to editing page, select Edit to add one page or press the button ADD on the right hand side of the HMI page to increase number of pages to edit. This keypad currently support up to 256 pages.

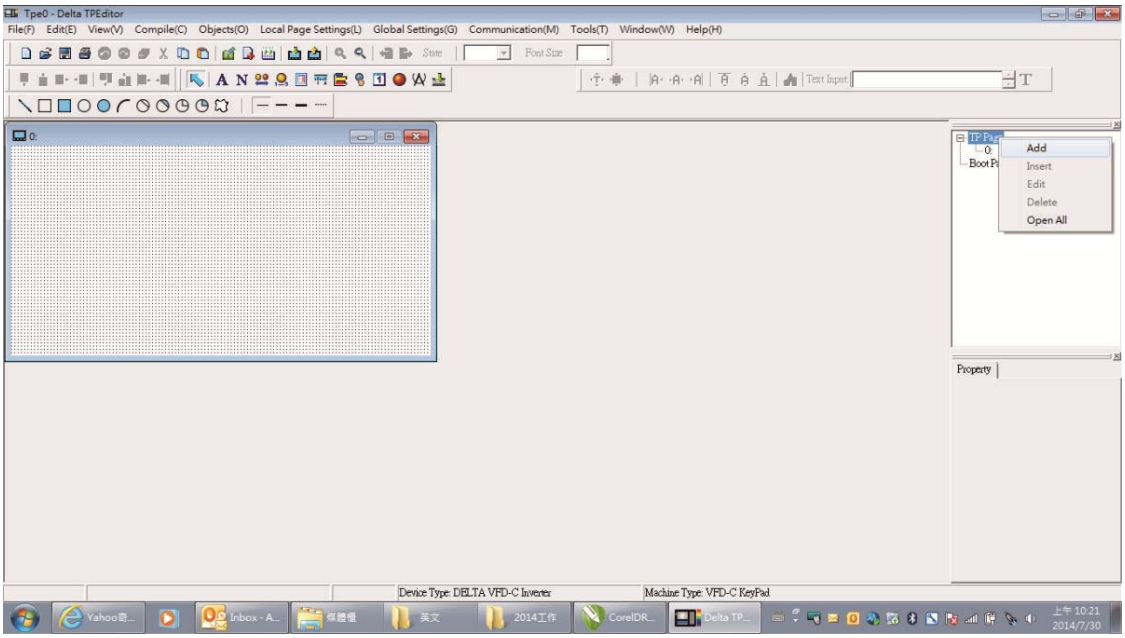


2. On the bottom right-hand corner of the HMI, click on a page number to edit or go to VIEW >HMI page to start editing main page. As shown in the image, the following objects are available. From left to right: Static Text, ASCII Display, Static Bitmap, Scale, Bar Graph, Button, Clock Display, Multi-state bit map, Units, Numeric Input and 11 geometric bitmaps and lines of different width. The application of Static Text, Static Bitmap, and geometric bitmap is the same as the editing startup page.

3. Numeric/ASCII Display: To add a Numeric/ASCII Display object to a screen, double click on the object to set up Related Devices, Frame Setting, Fonts and Alignment.

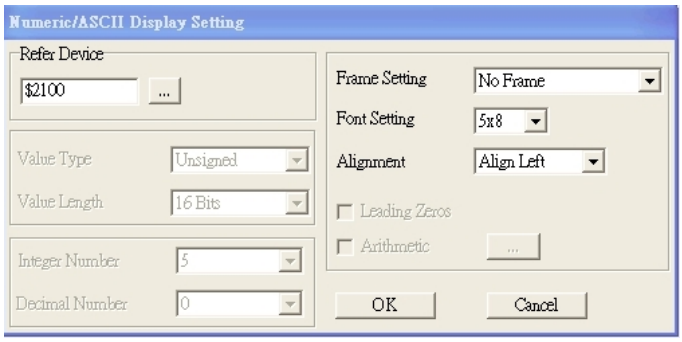


Related Device: Choose the VFD Communication Port that you need, if you want to read output frequency (H), set the VFD Communication Port to $2202. For other values, please refer to ACMD Modbus Comm. Address List.

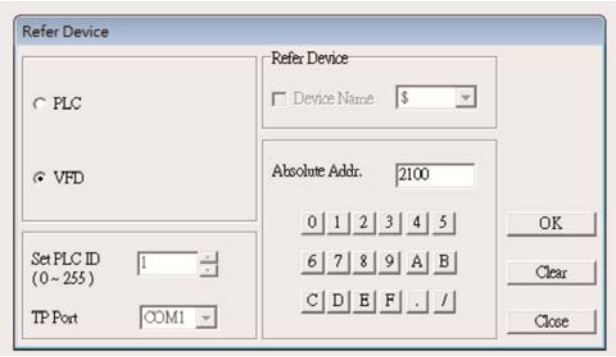


4. Scale Setting : On the Tool Bar, click on this for Scale Setting. You can also edit Scale Setting in the Property Window on the right hand side of your computer screen.

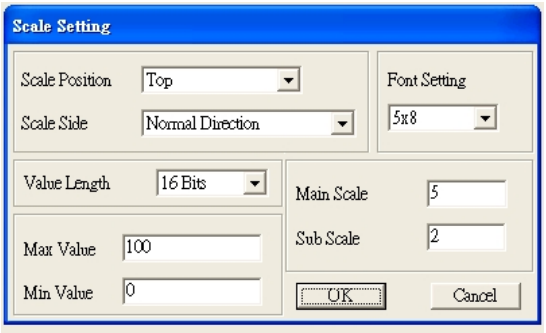


a. Scale Position: Click on the drop down list to choose which position that you need to place a scale.

b. Scale Side: Click on the drop down list to choose if you want to number your scale from smaller number to bigger number or from big to small. Click OK to accept this setting or click Cancel to abort.

c. Font Setting: Click on the drop down list to choose the Font setting that you need then click OK to accept the setting or click Cancel to abort.

d. Value Length: Click on the drop down to choose 16bits or 32 bits. Then click OK to accept the setting or click Cancel to abort.

e. Main Scale & Sub Scale: In order to divide the whole scale into equal parts, key in the numbers of your choices for main scale and sub scale.

f. Maximum value & Minimum Value are the numbers on the two ends of a scale. They can be negative numbers. But the values allowed to be input are limited by the length of value. For example, when the length of value is set to **be hexadecimal**, the maximum and the minimum value cannot be input as -4000.

Follow the Scale setting mentioned above; you will have a scale as shown below.

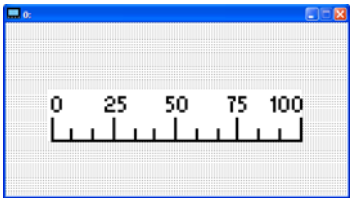

5. Bar Graph setting :

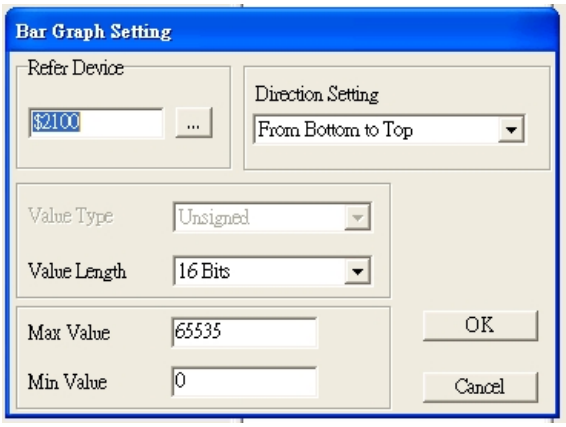


a. Related Device: Choose the VFD Communication Port that you need.

b. Direction Setting: Click on the drop down menu to choose one of the following directions: From Bottom to Top, From Top to Bottom, From Left to Right or From Right to Left.

c. Maximum Value & Minimum Value: They define the range covered by the maximum value and minimum value. If a value is smaller than or equal to the minimum value, then the bar graph will be blank. If a value is bigger or equal to the maximum value, then the bar graph will be full. If a value is between minimum and maximum value, then the bar graph will be filled proportionally.

6. Button : Currently this function only allows the Keypad to switch pages; other functions are not yet available. Text input function and Image inserted functions are not yet supported.

Double click on to open set up window.

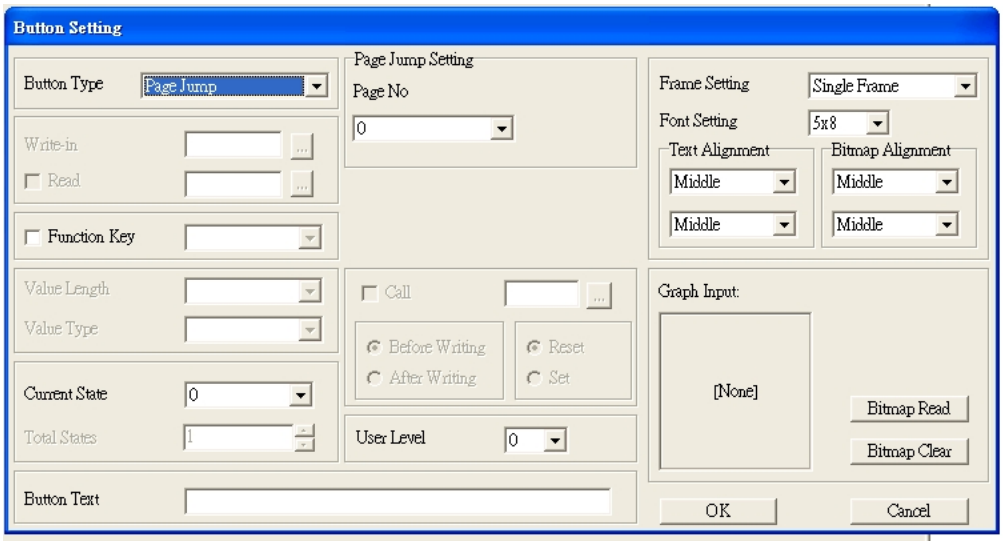


<Button Type> allows users set up buttons' functions. <Page Jump> and <Constant Setting> are the only two currently supported functions.

A [ Page Jump ] function setting

- Page Jump setting: After you choose the Page Jump function in the drop down list, you will see this Page Jump Setting Menu
- <Function Key> allows you to assign functions to the following keys on the KPC-CC01 keypad: F1,

F2, F3, F4, Up, Down, Left and Right. Please note that the Up and Down keys are locked by TPEditor. These two keys cannot be programmed. If you want to program Up and Down keys, go to Tool→Function Key Settings (F)→Re-Define Up/Down Key(R).

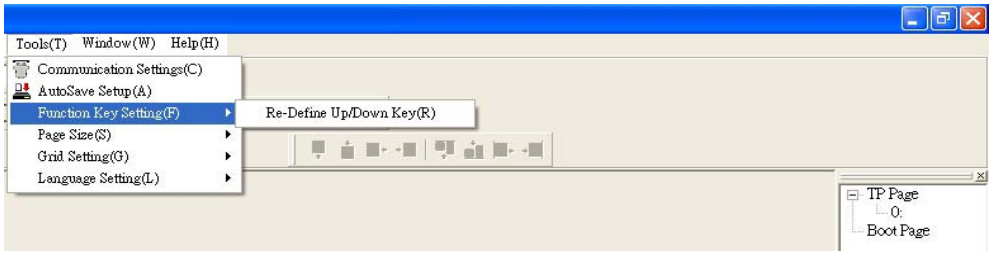


- Button Text: This function allows user to name buttons. For example, key in <Next Page> in the empty space, a button will have the wording <Next Page> displayed on it.

B [ Constant setting ] function

This function is to set up the memory address' value of the VFD or PLC. When pressing the <function button> set up in before, a value will be written to the memory address of the <Constant Setting>. This function can be used as initializing a variable.

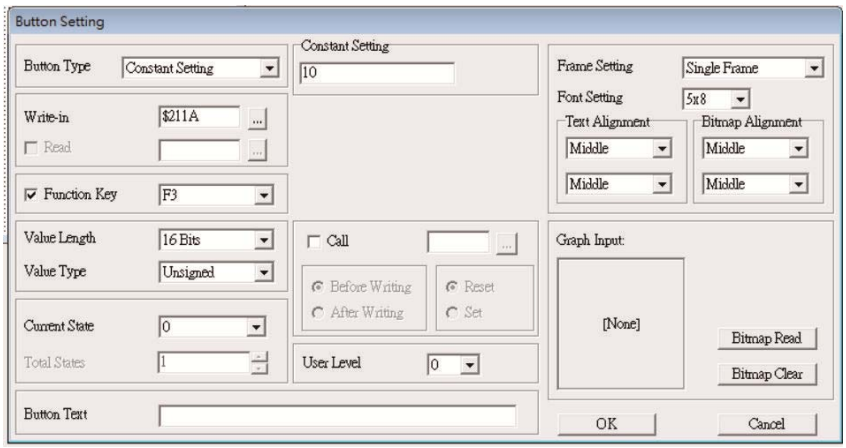


7. Clock Display Setting : The setup window of the Clock Display is shown as the image below. Time, Day or Date can be displayed on the keypad.

Open a new file and click once in that window, you will see the following

In the clock display setting, you can choose to display Time, Day or Date on the Keypad. To adjust time, go to #9 on the Keypad's menu. You can also adjust Frame Setting, Font Setting and Alignment.

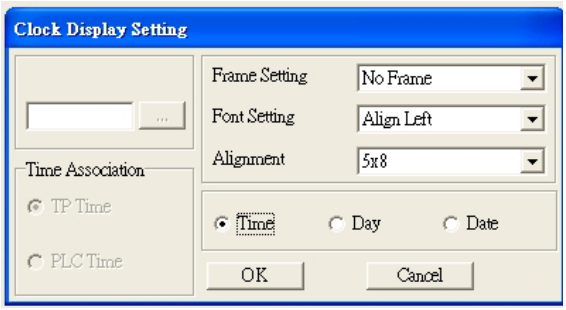

8. Multi-state bitmap : The setup window of the multi-state is shown as the image below. This object reads the bit's property value of the PLC. It defines what image or wording is when this bit is 0 or when this bit is 1. Set the initial status to be 0 or 1 to define the displayed image or wording.

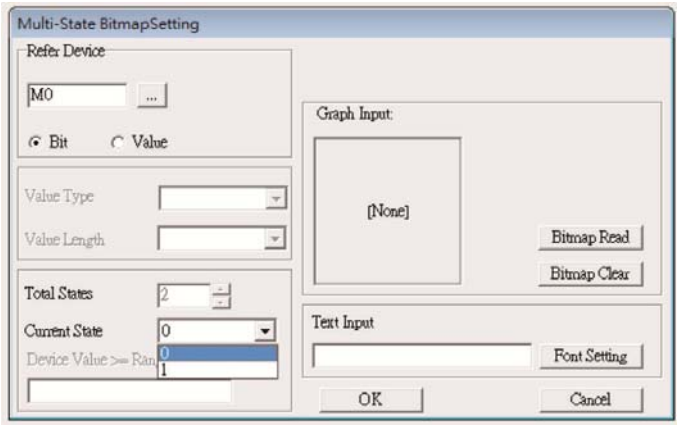


9. Unit Measurement : Click once on this Button:

Open a new file and double click on that window, you will see the following

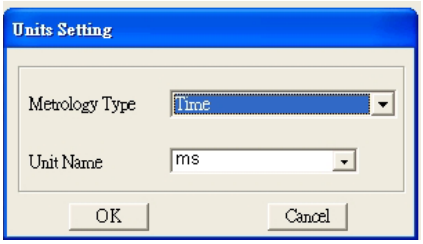


Choose from the drop down list the Metrology and the Unity Name that you need.

As for Metrology, you have the following choices Length, Square Measure, Volume/Solid Measure, Weight, Speed, Time and Temperature. The unit name changes automatically when you change metrology type.

10. Numeric Input Setting:

This menu allows you to provide parameters or communication ports and to input numbers.

Click once on this button .

Open a new file and double click on that window, you will see the following:

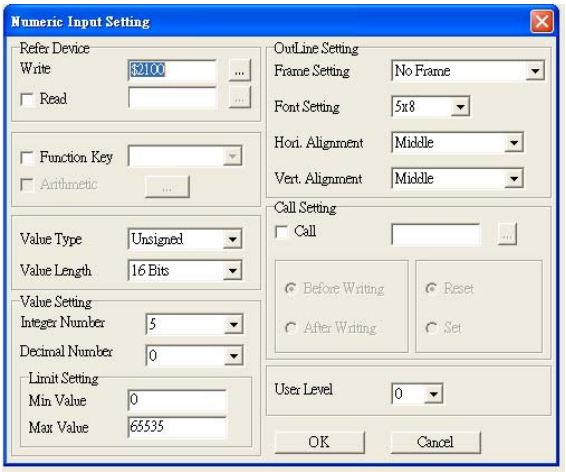

a. Related Device: There are two blank spaces to fill in, one is <Write> and another one is <Read>. Input the numbers that you want to display and the corresponding numbers of a parameter and that of a communication port. For example, input 012C to Read and Write Parameter P01-44.

b. Outline Setting: The Frame setting, Font setting, Vertical Alignment and Horizontal Alignment are the same as mentioned before. Click on the drop down menu and choose the setting that you need.

c. Function key: The setting here allows you to program keys on the keypad. Press the key on the menu then the corresponding key on the keypad will start to blink, then press Enter to confirm the setting.

d. Value Type & Value Length: These two factors influence the range of the Minimum and Maximum Value of the Limit Setting. Please note that the corresponding supporting values for C2000 have to be 16bits. The 32bits values are not supported.

e. Value Setting: This part is set automatically by the keypad itself.

f. Limit Setting: Input the range the security setting here.

g. For example, if you set Function Key as F1, Minimum Value as 0 and Maximum Value as 4, then press F1 on Keypad Then you can press Up and Down key on the keypad to increase or decrease the value. Press Enter Key on the keypad to confirm your setting. You can also go to parameter table 01-44 to verify if your input correctly the value.

11. Download TP Page : Press Up or Down key on the keypad until you reach #13 PC Link.

Then press Enter on the keypad and you will see the word “Waiting” on keypad’s screen. Now choose a page that you have created then go to Communication (M)→Write to TP(W) to start downloading the page to the keypad

When you see the word Completed on the keypad’s screen, that means the download is done.

Then you can press ESC on the keypad to go back to the menu of the keypad.

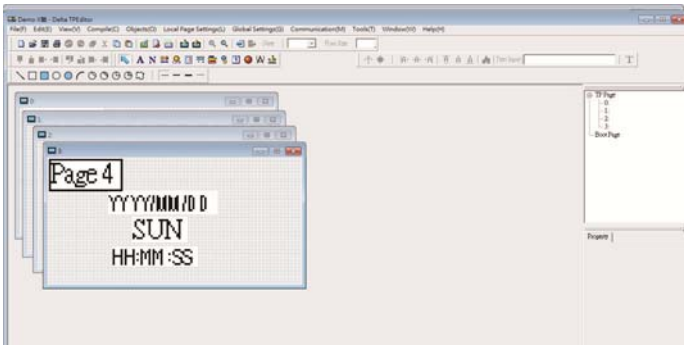


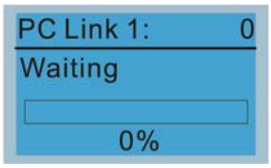


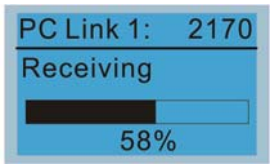


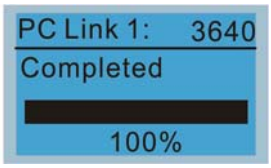

# 10-4 Digital Keypad KPC-CC01 Fault Codes and Descriptions

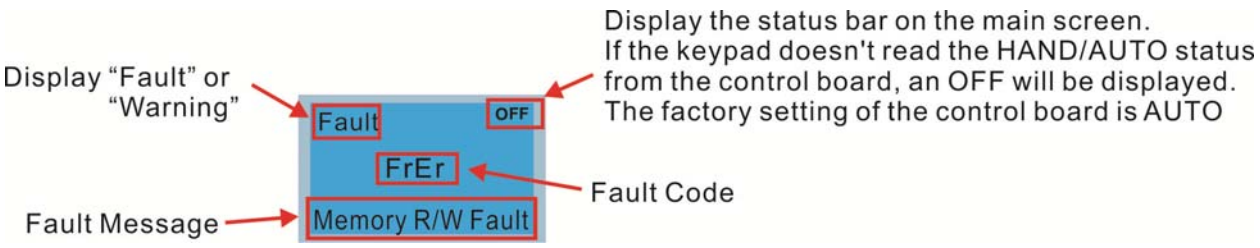


Following fault codes and description are for digital keypad KPC-CC01 with version V1.01 and version higher.

| LCM Display * | Description | Corrective Actions |
|---|---|---|
| HAND<br>Fault<br>FrEr<br>kpdFlash Read Er | Keypad flash memory read error | An error has occurred on keypad's flash memory.<br>1. Press RESET on the keypad to clear errors.<br>2. Verify what kind of error has occurred on keypad's flash memory.<br>3. Shut down the system, wait for ten minutes, and then power on again the system.<br>If none of the solution above works, contact your authorized local dealer. |
| HAND<br>Fault<br>FSEr<br>kpdFlash Save Er | Keypad flash memory save error | An error has occurred on keypad's flash memory.<br>1. Press RESET on the keypad to clear errors.<br>2. Press RESET on the keypad to clear errors.<br>3. Shut down the system, wait for ten minutes, and then power on again the system.<br>If none of the solution above works, contact your authorized local dealer. |
| HAND<br>Fault<br>FPEr<br>kpdFlash Pr Er | Keypad flash memory parameter error | Errors occurred on parameters of factory setting. It might be caused by firmware update.<br>1. Press RESET on the keypad to clear errors.<br>2. Verify if there's any problem on Flash IC.<br>3. Shut down the system, wait for ten minutes, and then power on again the system.<br>If none of the solution above works, contact your local authorized dealer. |
| HAND<br>Fault<br>VFDr<br>Read VFD Info Er | Keypad flash memory when read AC drive data error | Keypad can't read any data sent from VFD.<br>1. Verify if the keypad is properly connect to the motor drive by a communication cable such as RJ-45.<br>2. Press RESET on the keypad to clear errors.<br>3. Shut down the system, wait for ten minutes, and then power on again the system.<br>If none of the solution above works, contact your local authorized dealer. |
| HAND<br>Fault<br>CPUEr<br>CPU Error | Keypad CPU error | A Serious error has occurred on keypad's CPU.<br>1. Verify if there's any problem on CPU clock?<br>2. Verify if there's any problem on Flash IC?<br>3. Verify if there's any problem on RTC IC?<br>4. Verify if the communication quality of the RS485 is good?<br>5. Shut down the system, wait for ten minutes, and then power on again the system. If none of the solution above works, contact your local authorized dealer. |

## Warning Code

| LCM Display * | Description | Corrective Actions |
|---|---|---|
| HAND<br>Warning<br>CE01<br>Comm Command Er | Modbus function code error | Motor drive doesn't accept the communication command sent from keypad.<br>1. Verify if the keypad is properly connected to the motor drive on the communication contact by a communication cable such as RJ-45.<br>2. Press RESET on the keypad to clear errors.<br>If none of the solution above works, contact your local authorized dealer. |
| HAND<br>Warning<br>CE02<br>Comm Address Er | Modbus data address error | Motor rive doesn't accept keypad's communication address.<br>1. Verify if the keypad is properly connected to the motor drive on the communication contact by a communication cable such as RJ-45.<br>2. Press RESET on the keypad to clear errors.<br>If none of the solution above works, contact your local authorized dealer. |
| HAND<br>Warning<br>CE03<br>Comm Data Error | Modbus data value error | Motor drive doesn't accept the communication data sent from keypad.<br>1. Verify if the keypad is properly connected to the motor drive on the communication contact by a communication cable such as RJ-45.<br>2. Press RESET on the keypad to clear errors.<br>If none of the solution above works, contact your local authorized dealer. |
| HAND<br>Warning<br>CE04<br>Comm Slave Error | Modbus slave drive error | Motor drive cannot process the communication command sent from keypad.<br>1. Verify if the keypad is properly connected to the motor drive on the communication contact by a communication cable such as RJ-45.<br>2. Press RESET on the keypad to clear errors.<br>3. Shut down the system, wait for ten minutes, and then power on again the system.<br>If none of the solution above works, contact your local authorized dealer. |
| HAND<br>Warning<br>CE10<br>KpdComm Time Out | Modbus transmission time-Out | Motor drive doesn't respond to the communication command sent from keypad.<br>1. Verify if the keypad is properly connected to the motor drive on the communication contact by a communication cable such as RJ-45.<br>2. Press RESET on the keypad to clear errors.<br>3. Shut down the system, wait for ten minutes, and then power on again the system.<br>If none of the solution above works, contact your local authorized dealer. |
| HAND<br>Warning<br>TPNO<br>TP No Object | Object not supported by TP Editor | Keypad's TP Editor uses unsupported object.<br>1. Verify how the TP editor should use that object. Delete unsupported object and unsupported setting.<br>2. Reedit the TP editor and then download it.<br>If none of the solution above works, contact your local authorized dealer. |

Fault Occurred during Setup

When pressing the ENTER button on the KPC-CC01 keypad, a fault has occurred and a fault code such as ERR3 will pop up due to unable to execute the command.
Take copying parameters and copying PLC as two examples.

※ The information in this chapter is only applicable to v1.01 and above of KPC-CC01 keypad.

## File Copy Setting Fault Description

| LCM Display * | Description | Corrective Actions |
|---|---|---|
| 001> P00-00<br>ERR1<br>Read Only | Parameter and file are read only | The property of the parameter/file is read-only and cannot be written to.<br>1. Verify the specification on the user manual.<br>If the solution above doesn't work, contact your local authorized dealer. |
| 001> P00-00<br>ERR2<br>Write Fail | Fail to write parameter and file | An error occurred while write to a parameter/file.<br>1. Verify if there's any problem on the Flash IC.<br>2. Shut down the system, wait for ten minutes, and then power on again the system.<br>If none of the solution above work, contact your local authorized dealer. |
| 001> P00-00<br>ERR3<br>VFD Running | AC drive is in operating status | A setting cannot be made while motor drive is in operation.<br>1. Verify if the drive is not in operation.<br>If the solution above doesn't work, contact your local authorized dealer. |
| 001> P00-00<br>ERR4<br>Pr Lock | AC drive parameter is locked | A setting cannot be made because a parameter is locked.<br>1. Verify if the parameter is locked or not. If it is locked, unlock it and try to set up the parameter again.<br>If the solution above doesn't work, contact your local authorized dealer. |
| 001> P00-00<br>ERR5<br>Pr Changing | AC drive parameter changing | A setting cannot be made because a parameter is being modified.<br>1. Verify if the parameter is being modified. If it is not being modified, try to set up that parameter again.<br>If the solution above doesn't work, contact your local authorized dealer. |
| 001> P00-00<br>ERR6<br>Fault Code | Fault code | A setting cannot be made because an error has occurred on the motor drive.<br>1. Verify if there's any error occurred on the motor dive. If there isn't any error, try to make the setting again.<br>If the solution above doesn't work, contact your local authorized dealer. |
| 001> P00-00<br>ERR7<br>Warning Code | Warning code | A setting cannot be made because of a warning message given to the motor drive.<br>1. Verify if there's any warning message given to the motor drive.<br>If the solution above doesn't work, contact your local authorized dealer. |

| LCM Display * | Description | Corrective Actions |
|---|---|---|
| | File type mismatch | Data need to be copied are not same type, so the setting cannot be made.<br>1. Verify if the products' serial numbers need to be copied fall in the category. If they are in the same category, try to make the setting again.<br>If the solution above doesn't work, contact your authorized dealer. |
| 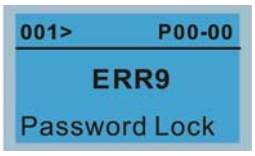 | File is locked with password | A setting cannot be made, because some data are locked.<br>1. Verify if the data are unlocked or able to be unlocked. If the data are unlocked, try to make the setting again.<br>2. Shut down the system, wait for ten minutes, and then power on again the system.<br>If none of the solution above works, contact your local authorized dealer. |
| 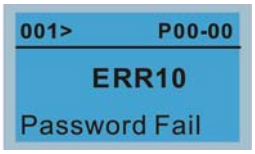 | File is locked with password | A setting cannot be made because the password is incorrect.<br>1. Verify if the password is correct. If the password is correct, try to make the setting again.<br>2. Shut down the system, wait for ten minutes, and then power on again the system.<br>If none of the solution above works, contact your local authorized dealer. |
| 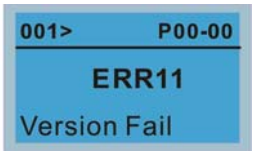 | File version mismatch | A setting cannot be made, because the version of the data is incorrect.<br>1. Verify if the version of the data matches the motor drive. If it matches, try to make the setting again.<br>If none of the solution above works, contact your local authorized dealer. |
| 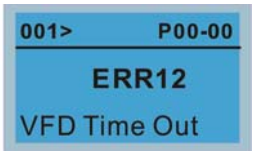 | AC drive copy function time-out | A setting cannot be made, because data copying timeout expired.<br>1. Redo data copying.<br>2. Verify if copying data is authorized. If it is authorized, try again to copy data.<br>3. Shut down the system, wait for ten minutes, and then power on again the system.<br>If none of the solution above works, contact your local authorized dealer. |

※ The content in this chapter only applies on V1.01 and above of KPC-CC01 keypad.

# 10-5 Unsupported Functions when using TPEditior on KPC-CC01 Keypad

1. Local Page Setting and Global Setting functions are not supported.

2. [Communication]→[Read from TP] functions are not supported.

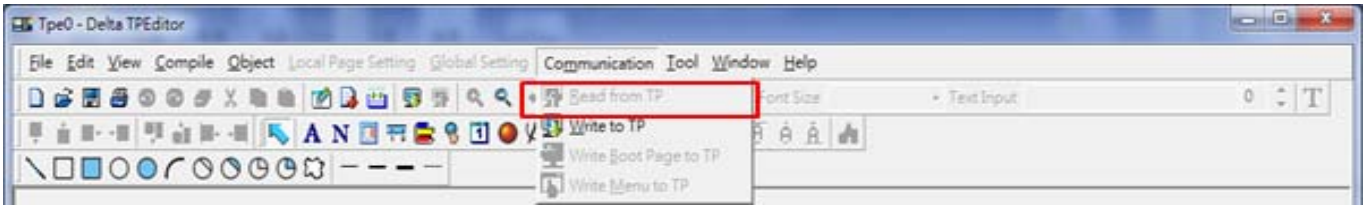


3. In RTC Display Setting, the Refer Device cannot be modified.

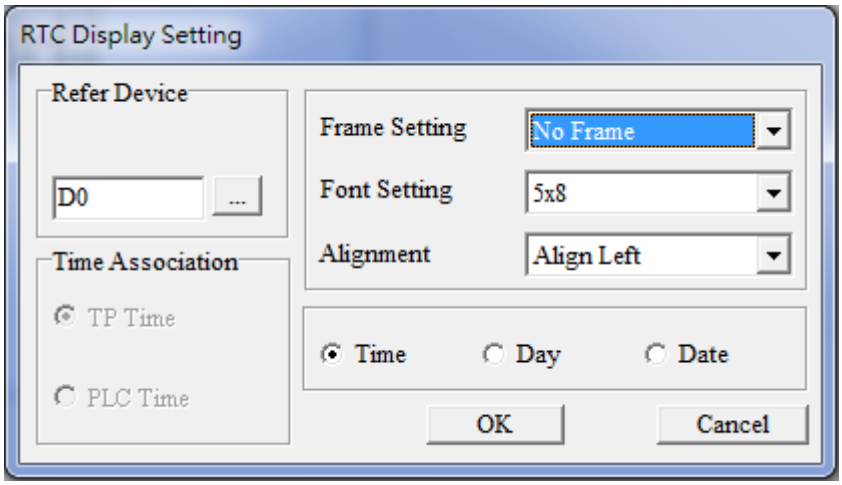

[This page intentionally left blank]

# *Chapter 11 Summary of Parameter Settings*

This chapter provides summary of parameter settings for user to gather the parameter setting ranges, factory settings and set parameters. The parameters can be set, changed and reset by the digital keypad.

NOTE

1) ✓: the parameter can be set during operation
2) For more detail on parameters, please refer to Ch12 Description of Parameter Settings.

## 00 Drive Parameters

NOTE IM: Induction Motor; PM: Permanent Magnet Motor

| Pr. | Explanation | Settings | Factory Setting |
|---|---|---|---|
| 00-00 | Identity code of the AC motor drive | 4: 230V, 1HP (0.75kW)<br>5: 460V, 1HP (0.75kW)<br>6: 230V, 2HP (1.5kW)<br>7: 460V, 2HP (1.5kW)<br>8: 230V, 3HP (2.2kW)<br>9: 460V, 3HP (2.2kW)<br>10: 230V, 5HP (3.7kW)<br>11: 460V, 5HP (3.7kW)<br>12: 230V, 7.5HP (5.5kW)<br>13: 460V, 7.5HP (5.5kW)<br>14: 230V, 10HP (7.5kW)<br>15: 460V, 10HP (7.5kW)<br>16: 230V, 15HP (11kW)<br>17: 460V, 15HP (11kW)<br>18: 230V, 20HP (15kW)<br>19: 460V, 20HP (15kW)<br>20: 230V, 25HP (18.5kW)<br>21: 460V, 25HP (18.5kW)<br>22: 230V, 30HP (22kW)<br>23: 460V, 30HP (22kW)<br>24: 230V, 40HP (30kW)<br>25: 460V, 40HP (30kW)<br>26: 230V, 50HP (37kW)<br>27: 460V, 50HP (37kW)<br>28: 230V, 60HP (45kW)<br>29: 460V, 60HP (45kW)<br>30: 230V, 75HP (55kW)<br>31: 460V, 75HP (55kW) | Read only |

| Pr. | Explanation | Settings | Factory Setting |
|---|---|---|---|
| | | 32: 230V, 100HP (75kW)<br>33: 460V, 100HP (75kW)<br>34: 230V, 125HP (90kW)<br>35: 460V, 125HP (90kW)<br>37: 460V, 150HP (110kW)<br>39: 460V, 175HP (132kW)<br>41: 460V, 215HP (160kW)<br>43: 460V, 250HP (185kW)<br>45: 460V, 300HP (220kW)<br>47: 460V, 375HP (280kW)<br>49: 460V, 425HP (315kW)<br>51: 460V, 475HP (355kW)<br>53: 460V, 536HP (400kW)<br>93: 460V, 5HP (4.0kW)<br>505: 575V, 2HP (1.5kW)<br>506: 575V, 3HP (2.2kW)<br>507: 575V, 5HP (3.7kW)<br>508: 575V, 7.5HP (5.5kW)<br>509: 575V, 10HP (7.5kW)<br>510: 575V, 15HP (11kW)<br>511: 575V, 20HP (15kW)<br>612: 690V, 25HP (18.5kW)<br>613: 690V, 30HP (22kW)<br>614: 690V, 40HP (30kW)<br>615: 690V, 50HP (37kW)<br>616: 690V, 60HP (45kW)<br>617: 690V, 75HP (55kW)<br>618: 690V, 100HP (75kW)<br>619: 690V, 125HP (90kW)<br>620: 690V, 150HP (110kW)<br>621: 690V, 175HP (132kW)<br>622: 690V, 215HP (160kW)<br>626: 690V, 425HP (315kW)<br>628: 690V, 530HP (400kW)<br>629: 690V, 600HP (450kW)<br>631: 690V, 745HP (560kW)<br>632: 690V, 850HP (630kW)<br>686: 690V, 270HP (200kW)<br>687: 690V, 335HP (250kW) | |

| | Pr. | Explanation | Settings | Factory Setting |
|---|---|---|---|---|
| | 00-01 | Display AC motor drive rated current | Display by models | Read only |
| | 00-02 | Parameter reset | 0: No function<br>1: Parameter write protect<br>5: Reset KWH display to 0<br>6: Reset PLC (including CANopen Master Index)<br>7: Reset CANopen Index (Slave)<br>9: All parameters are reset to factory settings (base frequency is 50Hz)<br>10: All parameters are reset to factory settings (base frequency is 60Hz) | 0 |
| ✓ | 00-03 | Start-up display selection | 0: F (frequency command)<br>1: H (output frequency)<br>2: U (user defined, see Pr. 00-04)<br>3: A (output current) | 0 |
| ✓ | 00-04 | Content of multi-function display | 0: Display output current (A) (Unit: Amps)<br>1: Display counter value (c) (Unit: CNT)<br>2: Display actual output frequency (H.) (Unit: Hz)<br>3: Display DC-BUS voltage (v) (Unit: VDC)<br>4: Display U, V, W output voltage (E) (Unit: VAC)<br>5: Display output power angle (n) (Unit: deg)<br>6: Display output power in kW (P) (Unit: kW)<br>7: Display actual motor speed rpm (r) (Unit: rpm)<br>10: Display PID feedback (b) (Unit: %)<br>11: Display AVI1 in % (1.) (Unit: %)<br>12: Display ACI in % (2.) (Unit: %)<br>13: Display AVI2 in % (3.) (Unit: %)<br>14: Display the temperature of IGBT (i.) (Unit: °C)<br>15: Display the temperature of capacitance (c.) (Unit: °C)<br>16: The status of digital input (ON / OFF) (i)<br>17: The status of digital output (ON / OFF) (o)<br>18: Multi-stage speed (S)<br>19: The corresponding CPU pin status of digital input (d)<br>20: The corresponding CPU pin status of digital output (0.)<br>25: Overload count (0.00~100.00%) (o.) (Unit: %)<br>26: Ground fault GFF (G.) (Unit: %)<br>27: DC-BUS voltage ripple (r.) (Unit: VDC) | 3 |

<table>
<tr><th></th><th>Pr.</th><th>Explanation</th><th>Settings</th><th>Factory Setting</th></tr>
<tr><td></td><td></td><td></td><td>28: Display PLC data D1043 (C)<br>30: Display output of user defined (U)<br>31: Display Pr. 00-05 user gain (K)<br>34: Operation speed of fan (F.) (Unit: %)<br>36: Present operating carrier frequency of drive (J.) (Unit: Hz)<br>38: Display drive status (6.)<br>41: KWH display (J) (Unit: kWH)<br>42: PID target value (h.) (Unit: %)<br>43: PID offset (o.) (Unit: %)<br>44: PID output frequency (b.) (Unit: Hz)<br>45: Hardware ID</td><td></td></tr>
<tr><td>✓</td><td>00-05</td><td>Coefficient gain in actual output frequency</td><td>0.00~160.00</td><td>1.00</td></tr>
<tr><td></td><td>00-06</td><td>Software version</td><td>Read only</td><td>Read only</td></tr>
<tr><td>✓</td><td>00-07</td><td>Parameter protection password input</td><td>0~65535<br>0~4: the times of password attempts</td><td>0</td></tr>
<tr><td>✓</td><td>00-08</td><td>Parameter protection password setting</td><td>0~65535<br>0: No password protection / password is entered correctly (Pr. 00-07)<br>1: Parameter is locked</td><td>0</td></tr>
<tr><td></td><td>00-11</td><td>Control of speed mode</td><td>0: VF (IM V/F control)<br>2: SVC (IM Sensorless vector control)</td><td>0</td></tr>
<tr><td></td><td>00-16</td><td>Load selection</td><td>0: Light duty<br>1: Normal duty</td><td>0</td></tr>
<tr><td></td><td>00-17</td><td>Carrier Frequency</td><td>Light duty
<table>
<tr><th>Model / Carrier Frequency</th><th>230V [HP]</th><th>460V [HP]</th><th>575V [HP]</th><th>*690V [HP]</th></tr>
<tr><td>2~15KHz</td><td>1~20</td><td>1~25</td><td>-</td><td>-</td></tr>
<tr><td>2~10KHz</td><td>25~60</td><td>30~100</td><td>-</td><td>-</td></tr>
<tr><td>2~9KHz</td><td>75~125</td><td>125~536</td><td>2~20</td><td>25~745</td></tr>
</table>
*690V, initial value of 630kW [850HP] is 3</td><td>8<br>6<br>4</td></tr>
<tr><td></td><td></td><td></td><td>Normal duty
<table>
<tr><th>Model / Carrier Frequency</th><th>230V [HP]</th><th>460V [HP]</th><th>575V [HP]</th><th>*690V [HP]</th></tr>
<tr><td>2~15KHz</td><td>0.5~15</td><td>0.5~20</td><td>-</td><td>-</td></tr>
<tr><td>2~10KHz</td><td>20~50</td><td>25~75</td><td>-</td><td>-</td></tr>
<tr><td>2~9KHz</td><td>60~100</td><td>100~475</td><td>2~20</td><td>25~745</td></tr>
</table>
*690V, initial value of 630kW [850HP] is 3</td><td>8<br>6<br>4</td></tr>
<tr><td></td><td>00-19</td><td>PLC command mask</td><td>bit 0: Control command by PLC force control<br>bit 1: Frequency command by PLC force control</td><td>Read only</td></tr>
</table>

| | Pr. | Explanation | Settings | Factory Setting |
|---|---|---|---|---|
| | 00-20 | Source of master frequency command (AUTO) | 0: Digital keypad<br>1: RS-485 serial communication<br>2: External analog input (Pr. 03-00)<br>3: External UP / DOWN terminal<br>6: CANopen communication card<br>8: Communication card (not include CANopen card) | 0 |
| | 00-21 | Source of the operation command (AUTO) | 0: Digital keypad<br>1: External terminals.<br>2: RS-485 serial communication.<br>3: CANopen communication card<br>5: Communication card (not include CANopen card) | 0 |
| ✓ | 00-22 | Stop method | 0: Ramp to stop<br>1: Coast to stop | 0 |
| ✓ | 00-23 | Control of motor direction | 0: Enable forward / reverse<br>1: Reverse disable<br>2: Forward disable | 0 |
| | 00-24 | Memory of digital operator (Keypad) frequency command | Read only | Read only |
| ✓ | 00-25 | User defined characteristics | bit 0~3: user defined decimal place<br>0000h --- 0000b: no decimal place<br>0001h --- 0001b: one decimal place<br>0002h --- 0010b: two decimal place<br>0003h --- 0011b: three decimal place<br>bit 4~15: user defined unit<br>000xh: Hz<br>001xh: rpm<br>002xh: %<br>003xh: kg<br>004xh: m/s<br>005xh: kW<br>006xh: HP<br>007xh: ppm<br>008xh: 1/m<br>009xh: kg/s<br>00Axh: kg/m<br>00Bxh: kg/h<br>00Cxh: lb/s<br>00Dxh: lb/m<br>00Exh: lb/h<br>00Fxh: ft/s | 0 |

| Pr. | Explanation | Settings | Factory Setting |
|---|---|---|---|
| | | 010xh: ft/m<br>011xh: m<br>012xh: ft<br>013xh: degC<br>014xh: degF<br>015xh: mbar<br>016xh: bar<br>017xh: Pa<br>018xh: kPa<br>019xh: mWG<br>01Axh: inWG<br>01Bxh: ftWG<br>01Cxh: psi<br>01Dxh: atm<br>01Exh: L/s<br>01Fxh: L/m<br>020xh: L/h<br>021xh: m3/s<br>022xh: m3/h<br>023xh: GPM<br>024xh: CFM<br>xxxxh: Hz | |
| 00-26 | Max. user defined value | 0: No function<br>0~65535 (when Pr. 00-25 set to no decimal place)<br>0.0~6553.5 (when Pr. 00-25 set to 1 decimal place)<br>0.00~655.35 (when Pr. 00-25 set to 2 decimal place)<br>0.000~65.535 (when Pr. 00-25 set to 3 decimal place) | 0 |
| 00-27 | User defined value | Read only | Read Only |
| 00-28 | Switching from Auto mode to Hand mode | bit0: Sleep function control bit<br>0: Cancel sleep function<br>1: Sleep function is equal to AUTO mode<br>bit1: Unit display control bit<br>0: Unit display is Hz<br>1: Unit display is equal to AUTO mode<br>bit2: PID control bit<br>0: Cancel PID control<br>1: PID control is equal to AUTO mode | |

| | Pr. | Explanation | Settings | Factory Setting |
|---|---|---|---|---|
| | | | bit3: Frequency source control bit<br>0: Frequency source set up by parameter, multi-stage speed is preferred when it started-up<br>1: Frequency source set up by Pr.00-30 whether multi-stage speed is started-up. | |
| | 00-29 | LOCAL / REMOTE selection | 0: Standard HOA function<br>1: Switching Local / Remote, the drive stops<br>2: Switching Local / Remote, the drive runs as the REMOTE setting for frequency and operation status<br>3: Switching Local / Remote, the drive runs as the LOCAL setting for frequency and operation status<br>4: Switching Local / Remote, the drive runs as LOCAL setting when switch to Local and runs as REMOTE setting when switch to Remote for frequency and operation status. | 0 |
| | 00-30 | Source of the master frequency command (HAND) | 0: Digital keypad<br>1: RS-485 serial communication<br>2: External analog input (Pr. 03-00)<br>3: External UP / DOWN terminal<br>6: CANopen communication card<br>8: Communication card (not include CANopen card) | 0 |
| | 00-31 | Source of the operation command (HAND) | 0: Digital keypad<br>1: External terminals.<br>2: RS-485 serial communication.<br>3: CANopen communication card<br>5: Communication card (not include CANopen card) | 0 |
| ✓ | 00-32 | Digital keypad STOP function | 0: STOP key disable<br>1: STOP key enable | 0 |
| ✓ | 00-48 | Display filter time (Current) | 0.001~65.535 sec. | 0.100 |
| ✓ | 00-49 | Display filter time (Keypad) | 0.001~65.535 sec. | 0.100 |
| | 00-50 | Software version (Date) | Read only | Read Only |

# 01 Basic Parameters

| | Pr. | Explanation | Settings | Factory Setting |
|---|---|---|---|---|
| | 01-00 | Max. operation frequency | 50.00~599.00Hz<br>Motor drive with 45kW（60HP）and above:<br>0.00~400Hz | 60.00 /<br>50.00 |
| | 01-01 | Output frequency of motor 1 | 0.00~599.00Hz | 60.00 /<br>50.00 |
| | 01-02 | Output voltage of motor 1 | 230V series: 0.0V~255.0V<br>460V series: 0.0V~510.0V<br>575V series: 0.0V~637.0V<br>690V series: 0.0V~765.0V | 200.0<br>400.0<br>575.0<br>660.0 |
| | 01-03 | Mid-point frequency 1 of motor 1 | 230V series: 0.00~599.00Hz<br>460V series: 0.00~599.00Hz<br>575V series: 0.00~599.00Hz<br>690V series: 0.00~599.00Hz | 3.00<br>3.00<br>0.00<br>0.00 |
| ✓ | 01-04 | Mid-point voltage 1 of motor 1 | 230V series: 0.0V~240.0V<br>460V series: 0.0V~480.0V<br>575V series: 0.0V~637.0V<br>690V series: 0.0V~720.0V<br>*690V, with 185kW and above: 10.0 | 11.0<br>22.0<br>0.0<br>0.0 |
| | 01-05 | Mid-point frequency 2 of motor 1 | 0.00~599.00Hz | 1.50 |
| ✓ | 01-06 | Mid-point voltage 2 of motor 1 | 230V series: 0.0V~240.0V<br>460V series: 0.0V~480.0V<br>575V series: 0.0V~637.0V<br>690V series: 0.0V~720.0V<br>*690V, with 185kW and above: 2.0 | 5.0<br>10.0<br>0.0<br>0.0 |
| | 01-07 | Min. output frequency of motor 1 | 0.00~599.00Hz | 0.50 |
| ✓ | 01-08 | Min. output voltage of motor 1 | 230V series: 0.0V~240.0V<br>460V series: 0.0V~480.0V<br>575V series: 0.0V~637.0V<br>690V series: 0.0V~720.0V | 1.0<br>2.0<br>0.0<br>0.0 |
| | 01-09 | Start-up frequency | 0.00~599.00Hz | 0.50 |
| ✓ | 01-10 | Output frequency upper limit | 0.00~599.00Hz | 599.00 |
| ✓ | 01-11 | Output frequency lower limit | 0.00~599.00Hz | 0.00 |
| ✓ | 01-12 | Accel. time 1 | Pr. 01-45=0: 0.00~600.00 sec.<br>Pr. 01-45=1: 0.0~6000.0 sec.<br>Motor drive with 230V/460V/690V, 22kW and above:<br>60.00 / 60.0<br>Motor drive with 690V, 160kW and above: 80.00 / 80.0 | 10.00<br>10.0 |

| | Pr. | Explanation | Settings | Factory Setting |
|---|---|---|---|---|
| ✓ | 01-13 | Decel. time 1 | Pr. 01-45=0: 0.00~600.00 sec.<br>Pr. 01-45=1: 0.0~6000.0 sec.<br>Motor drive with 230V/460V/690V, 22kW and above: 60.00 / 60.0<br>Motor drive with 690V, 160kW and above: 80.00 / 80.0 | 10.00<br>10.0 |
| ✓ | 01-14 | Accel. time 2 | Pr. 01-45=0: 0.00~600.00 sec.<br>Pr. 01-45=1: 0.0~6000.0 sec.<br>Motor drive with 230V/460V/690V, 22kW and above: 60.00 / 60.0<br>Motor drive with 690V, 160kW and above: 80.00 / 80.0 | 10.00<br>10.0 |
| ✓ | 01-15 | Decel. time 2 | Pr. 01-45=0: 0.00~600.00 sec.<br>Pr. 01-45=1: 0.0~6000.0 sec.<br>Motor drive with 230V/460V/690V, 22kW and above: 60.00 / 60.0<br>Motor drive with 690V, 160kW and above: 80.00 / 80.0 | 10.00<br>10.0 |
| ✓ | 01-16 | Accel. time 3 | Pr. 01-45=0: 0.00~600.00 sec.<br>Pr. 01-45=1: 0.0~6000.0 sec.<br>Motor drive with 230V/460V/690V, 22kW and above: 60.00 / 60.0<br>Motor drive with 690V, 160kW and above: 80.00 / 80.0 | 10.00<br>10.0 |
| ✓ | 01-17 | Decel. time 3 | Pr. 01-45=0: 0.00~600.00 sec.<br>Pr. 01-45=1: 0.0~6000.0 sec.<br>Motor drive with 230V/460V/690V, 22kW and above: 60.00 / 60.0<br>Motor drive with 690V, 160kW and above: 80.00 / 80.0 | 10.00<br>10.0 |
| ✓ | 01-18 | Accel. time 4 | Pr. 01-45=0: 0.00~600.00 sec.<br>Pr. 01-45=1: 0.0~6000.0 sec.<br>Motor drive with 230V/460V/690V, 22kW and above: 60.00 / 60.0<br>Motor drive with 690V, 160kW and above: 80.00 / 80.0 | 10.00<br>10.0 |
| ✓ | 01-19 | Decel. time 4 | Pr. 01-45=0: 0.00~600.00 sec.<br>Pr. 01-45=1: 0.0~6000.0 sec.<br>Motor drive with 230V/460V/690V, 22kW and above: 60.00 / 60.0<br>Motor drive with 690V, 160kW and above: 80.00 / 80.0 | 10.00<br>10.0 |
| ✓ | 01-20 | JOG acceleration time | Pr. 01-45=0: 0.00~600.00 sec.<br>Pr. 01-45=1: 0.0~6000.0 sec.<br>Motor drive with 230V/460V/690V, 22kW and above: 60.00 / 60.0<br>Motor drive with 690V, 160kW and above: 80.00 / 80.0 | 10.00<br>10.0 |

| | Pr. | Explanation | Settings | Factory Setting |
|---|---|---|---|---|
| ✓ | 01-21 | JOG deceleration time | Pr. 01-45=0: 0.00~600.00 sec.<br>Pr. 01-45=1: 0.0~6000.0 sec.<br>Motor drive with 230V/460V/690V, 22kW and above: 60.00 / 60.0<br>Motor drive with 690V, 160kW and above: 80.00 / 80.0 | 10.00<br>10.0 |
| ✓ | 01-22 | JOG frequency | 0.00~599.00Hz | 6.00 |
| ✓ | 01-23 | 1st / 4th accel. / decel. frequency | 0.00~599.00Hz | 0.00 |
| ✓ | 01-24 | S-curve acceleration begin time 1 | Pr. 01-45=0: 0.00~25.00 sec.<br>Pr. 01-45=1: 0.0~250.0 sec. | 0.20<br>0.2 |
| ✓ | 01-25 | S-curve acceleration arrival time 2 | Pr. 01-45=0: 0.00~25.00 sec.<br>Pr. 01-45=1: 0.0~250.0 sec. | 0.20<br>0.2 |
| ✓ | 01-26 | S-curve deceleration begin time 1 | Pr. 01-45=0: 0.00~25.00 sec.<br>Pr. 01-45=1: 0.0~250.0 sec. | 0.20<br>0.2 |
| ✓ | 01-27 | S-curve deceleration arrival time 2 | Pr. 01-45=0: 0.00~25.00 sec.<br>Pr. 01-45=1: 0.0~250.0 sec. | 0.20<br>0.2 |
| | 01-28 | Skip frequency 1 (upper limit) | 0.00~599.00Hz | 0.00 |
| | 01-29 | Skip frequency 1 (lower limit) | 0.00~599.00Hz | 0.00 |
| | 01-30 | Skip frequency 2 (upper limit) | 0.00~599.00Hz | 0.00 |
| | 01-31 | Skip frequency 2 (lower limit) | 0.00~599.00Hz | 0.00 |
| | 01-32 | Skip frequency 3 (upper limit) | 0.00~599.00Hz | 0.00 |
| | 01-33 | Skip frequency 3 (lower limit) | 0.00~599.00Hz | 0.00 |
| | 01-34 | Zero-speed mode | 0: Output waiting<br>1: Zero-speed operation<br>2: Fmin (Refer to Pr. 01-07, 01-41) | 0 |
| | 01-35 | Output frequency of motor 2 | 0.00~599.00Hz | 60.00 / 50.00 |
| | 01-36 | Output voltage of motor 2 | 230V series: 0.0V~255.0V<br>460V series: 0.0V~510.0V<br>575V series: 0.0V~637.0V<br>690V series: 0.0V~765.0V | 200.0<br>400.0<br>575.0<br>660.0 |
| | 01-37 | Mid-point frequency 1 of motor 2 | 0.00~599.00Hz | 3.00 |
| ✓ | 01-38 | Mid-point voltage 1 of motor 2 | 230V series: 0.0V~240.0V<br>460V series: 0.0V~480.0V<br>575V series: 0.0V~637.0V<br>690V series: 0.0V~720.0V<br>Motor drive with 690V, 185kW and above: 10.0 | 11.0<br>22.0<br>0.0<br>0.0 |
| | 01-39 | Mid-point frequency 2 of motor 2 | 0.00~599.00Hz | 1.50 |
| ✓ | 01-40 | Mid-point voltage 2 of motor 2 | 230V series: 0.0V~240.0V<br>460V series: 0.0V~480.0V<br>575V series: 0.0V~637.0V | 5.0<br>10.0<br>0.0 |

| | Pr. | Explanation | Settings | Factory Setting |
|---|---|---|---|---|
| | | | 690V series: 0.0V~720.0V<br>Motor drive with 690V, 185kW and above: 2.0 | 0.0 |
| | 01-41 | Min. output frequency of motor 2 | 0.00~599.00Hz | 0.50 |
| ✓ | 01-42 | Min. output voltage of motor 2 | 230V series: 0.0V~240.0V<br>460V series: 0.0V~480.0V<br>575V series: 0.0V~637.0V<br>690V series: 0.0V~720.0V | 1.0<br>2.0<br>0.0<br>0.0 |
| | 01-43 | V/F curve selection | 0: V/F curve determined by Pr. 01-00~01-08<br>1: V/F curve to the 1.5th<br>2: V/F curve to the square<br>3: 60Hz, voltage saturation in 50Hz<br>4: 72Hz, voltage saturation in 60Hz<br>5: 50Hz, decrease gradually with cube<br>6: 50Hz, decrease gradually with square<br>7: 60Hz, decrease gradually with cube<br>8: 60Hz, decrease gradually with square<br>9: 50Hz, mid. starting torque<br>10: 50Hz, high starting torque<br>11: 60Hz, mid. starting torque<br>12: 60Hz, high starting torque<br>13: 90Hz, voltage saturation in 60Hz<br>14: 120Hz, voltage saturation in 60Hz<br>15: 180Hz, voltage saturation in 60Hz | 0 |
| ✓ | 01-44 | Auto acceleration / deceleration setting | 0: Linear accel. /decel.<br>1: Auto accel. , linear decel.<br>2: Linear accel. , auto decel.<br>3: Auto accel. / decel.<br>4: Linear, stall prevention by auto accel. / decel. (limit by Pr. 01-12~01-21) | 0 |
| | 01-45 | Time unit for accel. / decel. and S curve | 0: Unit: 0.01 sec.<br>1: Unit: 0.1 sec. | 0 |
| ✓ | 01-46 | CANopen quick stop time | Pr. 01-45=0: 0.00~600.00 sec.<br>Pr. 01-45=1: 0.0~6000.0 sec. | 1.00 |
| | 01-49 | Deceleration Method | 0: Normal decel.<br>1: Over fluxing decel.<br>2: Traction energy control | 0 |

# 02 Digital Input / Output Parameters

| Pr. | Explanation | Settings | Factory Setting |
|---|---|---|---|
| 02-00 | 2-wire / 3-wire operation control | 0: 2-wire mode 1, power on for operation control<br>1: 2-wire mode 2, power on for operation control<br>2: 3-wire, power on for operation control | 0 |
| 02-01 | Multi-function input command 1 (MI1) | 0: No function<br>1: Multi-stage speed command 1 / multi-stage position command 1<br>2: Multi-stage speed command 2 / multi-stage position command 2<br>3: Multi-stage speed command 3 / multi-stage position command 3<br>4: Multi-stage speed command 4 / multi-stage position command 4<br>5: Reset<br>6: JOG command (By KPC-CC01 or external control)<br>7: Acceleration / deceleration speed inhibit<br>8: The 1st, 2nd acceleration / deceleration time selection<br>9: The 3rd, 4th acceleration / deceleration time selection<br>10: EF input (Pr. 07-20)<br>11: B.B input from external (Base Block)<br>12: Output stop<br>13: Cancel the setting of auto accel. / decel. time<br>14: Switch between motor 1 and motor 2<br>15: Operation speed command from AVI1<br>16: Operation speed command from ACI<br>17: Operation speed command from AVI2<br>18: Emergency stop (Pr. 07-20)<br>19: Digital up command<br>20: Digital down command<br>21: PID function disabled<br>22: Clear counter<br>23: Input the counter value (MI6)<br>24: FWD JOG command<br>25: REV JOG command | 1 |
| 02-02 | Multi-function input command 2 (MI2) | | 2 |
| 02-03 | Multi-function input command 3 (MI3) | | 3 |
| 02-04 | Multi-function input command 4 (MI4) | | 4 |
| 02-05 | Multi-function input command 5 (MI5) | | 0 |
| 02-06 | Multi-function input command 6 (MI6) | | 0 |
| 02-07 | Multi-function input command 7 (MI7) | | 0 |
| 02-08 | Multi-function input command 8 (MI8) | | 0 |
| 02-26 | Input terminal of I/O extension card (MI10) | | 0 |
| 02-27 | Input terminal of I/O extension card (MI11) | | 0 |
| 02-28 | Input terminal of I/O extension card (MI12) | | 0 |
| 02-29 | Input terminal of I/O extension card (MI13) | | 0 |
| 02-30 | Input terminal of I/O extension card (MI14) | | 0 |
| 02-31 | Input terminal of I/O extension card (MI15) | | 0 |

| | Pr. | Explanation | Settings | Factory Setting |
|---|---|---|---|---|
| | | | 28: Emergency stop (EF1)<br>29: Signal confirmation for Y-connection<br>30: Signal confirmation for Δ-connection<br>38: Disable EEPROM write function<br>40: Force coast to stop<br>41: HAND switch<br>42: AUTO switch<br>49: Drive enable<br>50: Slave dEb action to execute<br>51: Selection for PLC mode bit 0<br>52: Selection for PLC mode bit 1<br>53: Trigger CANopen quick stop<br>54: confirm UVW Magnetic Switch<br>55: Brake release<br>56: Local / Remote selection<br>58: start conflagration mode（Include RUN command）<br>59: start conflagration mode（No RUN command）<br>60: All motor failure<br>61: Motor 1 failure<br>62: Motor 2 failure<br>63: Motor 3 failure<br>64: Motor 4 failure<br>65: Motor 5 failure<br>66: Motor 6 failure<br>67: Motor 7 failure<br>69: Preheating operation command | |
| ✓ | 02-09 | UP / DOWN key mode | 0: UP / DOWN by the accel. / decel. time<br>1: UP / DOWN constant speed (Pr. 02-10) | 0 |
| ✓ | 02-10 | Constant speed. The accel. / decel. speed of the UP / DOWN key | 0.001~1.000Hz / ms | 0.001 |
| ✓ | 02-11 | Digital input response time | 0.000~30.000 sec. | 0.005 |
| ✓ | 02-12 | Digital input mode selection | 0000h~FFFFh (0: N.O.; 1: N.C.) | 0000h |
| ✓ | 02-13 | Multi-function output 1 RY1 | 0: No function | 11 |
| ✓ | 02-14 | Multi-function output 2 RY2 | 1: Operation indication<br>2: Operation speed attained | 1 |
| ✓ | 02-15 | Multi-function output 3 RY3 | 3: Desired frequency attained 1 (Pr. 02-22) | 66 |
| ✓ | 02-36 | Output terminal of the I/O extension card (MO10) or (RA10) | 4: Desired frequency attained 2 (Pr. 02-24)<br>5: Zero speed (Frequency command) | 0 |

| | Pr. | Explanation | Settings | Factory Setting |
|---|---|---|---|---|
| ✓ | 02-37 | Output terminal of I/O extension card (MO11) or (RA11) | 6: Zero speed, include STOP (Frequency command)<br>7: Over torque 1 (Pr. 06-06~06-08)<br>8: Over torque 2 (Pr. 06-09~06-11)<br>9: Drive is ready<br>10: Low voltage warning (LV) (Pr. 06-00)<br>11: Malfunction indication<br>12: Mechanical brake release (Pr. 02-32)<br>13: Overheat warning (Pr. 06-15)<br>14: Software brake signal indication (Pr. 07-00)<br>15: PID feedback error (Pr. 08-13, Pr. 08-14)<br>16: Slip error (oSL)<br>17: Terminal count value attained, does not return to 0 (Pr. 02-20)<br>18: Preliminary count value attained, returns to 0 (Pr. 02-19)<br>19: External Base Block input (B.B.)<br>20: Warning output<br>21: Over voltage warning<br>22: Over-current stall prevention warning<br>23: Over-voltage stall prevention warning<br>24: Operation mode indication<br>25: Forward command<br>26: Reverse command<br>27: Output when current ≥ Pr. 02-33<br>28: Output when current < Pr. 02-33<br>29: Output when frequency ≥ Pr. 02-34<br>30: Output when frequency < Pr. 02-34<br>31: Y-connection for the motor coil<br>32: Δ-connection for the motor coil<br>33: Zero speed (actual output frequency)<br>34: Zero speed include stop (actual output frequency)<br>35: Error output selection 1 (Pr. 06-23)<br>36: Error output selection 2 (Pr. 06-24)<br>37: Error output selection 3 (Pr. 06-25)<br>38: Error output selection 4 (Pr. 06-26)<br>40: Speed attained (including stop)<br>44: Low current output (use with Pr. 06-71~06-73)<br>45: UVW output electromagnetic valve switch | 0 |
| ✓ | 02-38 | Output terminal of I/O extension card (MO12) or (RA12) | | 0 |
| ✓ | 02-39 | Output terminal of I/O extension card (MO13) or (RA13) | | 0 |
| ✓ | 02-40 | Output terminal of I/O extension card (MO14) or (RA14) | | 0 |
| ✓ | 02-41 | Output terminal of I/O extension card (MO15) or (RA15) | | 0 |
| ✓ | 02-42 | Output terminal of I/O extension card (MO16) | | 0 |
| ✓ | 02-43 | Output terminal of I/O extension card (MO17) | | 0 |
| ✓ | 02-44 | Output terminal of I/O extension card (MO18) | | 0 |
| ✓ | 02-45 | Output terminal of I/O extension card (MO19) | | 0 |
| ✓ | 02-46 | Output terminal of I/O extension card (MO20) | | 0 |

| | Pr. | Explanation | Settings | Factory Setting |
|---|---|---|---|---|
| | | | 46: Master dEb warning output<br>47: Closed brake output<br>50: As output control for CANopen<br>51: As analog output control for InnerCOM<br>52: As output control for communication card<br>53: conflagration mode instruction<br>54: conflagration mode bypass instruction<br>55: Motor 1 output<br>56: Motor 2 output<br>57: Motor 3 output<br>58: Motor 4 output<br>59: Motor 5 output<br>60: Motor 6 output<br>61: Motor 7 output<br>62: Motor 8 output<br>66: SO logic A<br>67: Analog input level attained<br>68: SO logic B<br>69: Preheat output instruction | |
| ✓ | 02-18 | Multi-function output direction | 0000h~FFFFh (0: N.O.; 1: N.C.) | 0000h |
| ✓ | 02-19 | Terminal counting value attained (returns to 0) | 0~65500 | 0 |
| ✓ | 02-20 | Preliminary counting value attained (not return to 0) | 0~65500 | 0 |
| ✓ | 02-22 | Desired frequency attained 1 | 0.00~599.00Hz | 60.00 / 50.00 |
| ✓ | 02-23 | The width of the desired frequency attained 1 | 0.00~599.00Hz | 2.00 |
| ✓ | 02-24 | Desired frequency attained 2 | 0.00~599.00Hz | 60.00 / 50.00 |
| ✓ | 02-25 | The width of the desired frequency attained 2 | 0.00~599.00Hz | 2.00 |
| | 02-32 | Brake delay time | 0.000~65.000 sec. | 0.000 |
| ✓ | 02-33 | Output current level setting for multi-function output terminal | 0~150% | 0 |
| ✓ | 02-34 | Output frequency setting for multi-function output terminal | 0.00~599.00Hz | 3.00 |
| ✓ | 02-35 | External operation control selection after reset and activate | 0: Disable<br>1: Drive runs if run command exists after reset | 0 |

| | Pr. | Explanation | Settings | Factory Setting |
|---|---|---|---|---|
| | 02-50 | Status of multi-function input terminal | Monitor the status of multi-function input terminals | Read only |
| | 02-51 | Status of multi-function output terminal | Monitor the status of multi-function output terminals | Read only |
| | 02-52 | Display external multi-function input terminal occupied by PLC | Monitor the status of PLC input terminals | Read only |
| | 02-53 | Display external multi-function output terminal occupied by PLC | Monitor the status of PLC output terminals | Read only |
| | 02-54 | Display the frequency command executed by external terminal | 0.00~599.00Hz (Read only) | Read only |
| | 02-70 | IO card type | 0: NO IO card<br>1: EMC-BPS01 card<br>2: NO IO card<br>3: NO IO card<br>4: EMC-D611A card<br>5: EMC-D42A card<br>6: EMC-R6AA card<br>7: NO IO card | Read only |
| ✓ | 02-72 | Preheating output current level | 0~100% | 0 |
| ✓ | 02-73 | Preheating output cycle | 0~100% | 0 |

# 03 Analog Input / Output Parameters

| | Pr. | Explanation | Settings | Factory Setting |
|---|---|---|---|---|
| ✓ | 03-00 | Analog input selection (AVI1) | 0: No function | 1 |
| ✓ | 03-01 | Analog input selection (ACI) | 1: Frequency command (speed limit under torque control mode) | 0 |
| ✓ | 03-02 | Analog input selection (AVI2) | | 0 |
| | | | 4: PID target value | |
| | | | 5: PID feedback signal | |
| | | | 6: PTC thermistor input value | |
| | | | 11: PT100 thermistor input value | |
| | | | 13: PID offset amount | |
| ✓ | 03-03 | Analog input bias (AVI1) | -100.0~100.0% | 0.0 |
| ✓ | 03-04 | Analog input bias (ACI) | | |
| ✓ | 03-05 | Analog positive voltage input bias (AVI2) | | |
| ✓ | 03-07 | Positive / negative bias mode (AVI1) | 0: No bias<br>1: Lower than or equal to bias<br>2: Greater than or equal to bias<br>3: The absolute value of the bias voltage while serving as the center<br>4: Serve bias as the center | 0 |
| ✓ | 03-08 | Positive / negative bias mode (ACI) | | |
| ✓ | 03-09 | Positive / negative bias mode (AVI2) | | |
| ✓ | 03-10 | Analog frequency command for reverse run | 0: Negative frequency is not valid. Forward and reverse run is controlled by digital keypad or external terminal.<br>1: Negative frequency is valid. Positive frequency = forward run; negative frequency = reverse run. Direction cannot be switched by digital keypad or external terminal control. | 0 |
| ✓ | 03-11 | Analog input gain (AVI1) | -500.0~500.0% | 100.0 |
| ✓ | 03-12 | Analog input gain (ACI) | | |
| ✓ | 03-13 | Analog input gain 1 (AVI2) | | |
| ✓ | 03-14 | Analog input gain 2 (AVI2) | | |
| ✓ | 03-15 | Analog input filter time (AVI1) | 0.00~20.00 sec. | 0.01 |
| ✓ | 03-16 | Analog input filter time (ACI) | | |
| ✓ | 03-17 | Analog input filter time (AVI2) | | |
| ✓ | 03-18 | Addition function of the analog input | 0: Disable (AVI1, ACI, AVI2)<br>1: Enable | 0 |
| | 03-19 | Signal loss selection of analog input 4~20mA | 0: Disable<br>1: Continue operation at the last frequency<br>2: Decelerate to 0Hz<br>3: Stop immediately and display ACE | 0 |

| | Pr. | Explanation | Settings | Factory Setting |
|---|---|---|---|---|
| ✓ | 03-20 | Multi-function output 1 (AFM1) | 0: Output frequency (Hz)<br>1: Frequency command (Hz)<br>2: Motor speed (Hz)<br>3: Output current (rms)<br>4: Output voltage<br>5: DC-BUS voltage<br>6: Power factor<br>7: Power<br>9: AVI1%<br>10: ACI%<br>11: AVI2%<br>20: CANopen analog output<br>21: RS-485 analog output<br>22: Communication card analog output<br>23: Constant voltage output | 0 |
| ✓ | 03-23 | Multi-function output 2 (AFM2) | | 0 |
| ✓ | 03-21 | Gain of analog output 1 (AFM1) | 0.0~500.0% | 100.0 |
| ✓ | 03-22 | Analog output 1 when in REV direction (AFM1) | 0: Absolute output voltage<br>1: Output 0V in REV direction; output 0~10V in FWD direction<br>2: Output 5~0V in REV direction; output 5~10V in FWD direction | 0 |
| ✓ | 03-24 | Gain of analog output 2 (AFM2) | 0.0~500.0% | 100.0 |
| ✓ | 03-25 | Analog output 2 when in REV direction (AFM2) | 0: Absolute output voltage<br>1: Output 0V in REV direction; output 0~10V in FWD direction<br>2: Output 5~0V in REV direction; output 5~10V in FWD direction | 0 |
| ✓ | 03-27 | AFM2 output bias | -100.00~100.00% | 0.00 |
| ✓ | 03-28 | AVI1 terminal input selection | 0: 0~10V<br>1: 0~20mA<br>2: 4~20mA | 0 |
| ✓ | 03-29 | ACI terminal input selection | 0: 4~20mA<br>1: 0~10V<br>2: 0~20mA | 0 |
| | 03-30 | Display analog output terminal occupied by PLC | Monitor the status of PLC analog output terminals | Read only |
| ✓ | 03-31 | AFM2 0~20mA output selection | 0: 0~20mA output<br>1: 4~20mA output | 0 |
| ✓ | 03-34 | AFM1 0~20mA Output selection | | |
| ✓ | 03-32 | AFM1 DC output setting level | 0.00~100.00% | 0.00 |
| ✓ | 03-33 | AFM2 DC output setting level | | |
| ✓ | 03-35 | AFM1 filter output time | 0.00~20.00 sec. | 0.01 |
| ✓ | 03-36 | AFM2 filter output time | | |

| | Pr. | Explanation | Settings | Factory Setting |
|---|---|---|---|---|
| ✓ | 03-44 | MO output by source of AI level | 0: AVI1<br>1: ACI<br>2: AVI2 | 0 |
| ✓ | 03-45 | MO output by source of AI upper level | -100.00%~100.00% | 50.00 |
| ✓ | 03-46 | MO output by source of AI lower level | -100.00%~100.00% | 10.00 |
| ✓ | 03-50 | Analog input curve selection | 0: Regular curve<br>1: 3 point curve of AVI1<br>2: 3 point curve of ACI<br>3: 3 point curve of AVI1 & ACI<br>4: 3 point curve of AVI2<br>5: 3 point curve of AVI1 & AVI2<br>6: 3 point curve of ACI & AVI2<br>7: 3 point curve of AVI1 & ACI & AVI2 | 7 |
| ✓ | 03-51 | AVI1 low point | Pr. 03-28=0, 0.00~10.00V<br>Pr. 03-28≠0, 0.00~20.00mA | 0.00 |
| ✓ | 03-52 | AVI1 proportional low point | -100.00~100.00% | 0.00 |
| ✓ | 03-53 | AVI1 mid-point | Pr. 03-28=0, 0.00~10.00V<br>Pr. 03-28≠0, 0.00~20.00mA | 5.00 |
| ✓ | 03-54 | AVI1 proportional mid-point | -100.00~100.00% | 50.00 |
| ✓ | 03-55 | AVI1 high point | Pr. 03-28=0, 0.00~10.00V<br>Pr. 03-28≠0, 0.00~20.00mA | 10.00 |
| ✓ | 03-56 | AVI1 proportional high point | -100.00~100.00% | 100.00 |
| ✓ | 03-57 | ACI low point | Pr. 03-29=1, 0.00~10.00V<br>Pr. 03-29≠1, 0.00~20.00mA | 4.00 |
| ✓ | 03-58 | ACI proportional low point | -100.00~100.00% | 0.00 |
| ✓ | 03-59 | ACI mid-point | Pr. 03-29=1, 0.00~10.00V<br>Pr. 03-29≠1, 0.00~20.00mA | 12.00 |
| ✓ | 03-60 | ACI proportional mid-point | -100.00~100.00% | 50.00 |
| ✓ | 03-61 | ACI high point | Pr. 03-29=1, 0.00~10.00V<br>Pr. 03-29≠1, 0.00~20.00mA | 20.00 |
| ✓ | 03-62 | ACI proportional high point | -100.00~100.00% | 100.00 |
| ✓ | 03-63 | Positive AVI2 voltage low point | 0.00~10.00V | 0.00 |
| ✓ | 03-64 | Positive AVI2 voltage proportional low point | -100.00~100.00% | 0.00 |
| ✓ | 03-65 | Positive AVI2 voltage mid-point | 0.00~10.00V | 5.00 |
| ✓ | 03-66 | Positive AVI2 voltage proportional mid-point | -100.00~100.00% | 50.00 |
| ✓ | 03-67 | Positive AVI2 voltage high point | 0.00~10.00V | 10.00 |

| | Pr. | Explanation | Settings | Factory Setting |
|---|---|---|---|---|
| ✓ | 03-68 | Positive AVI2 voltage proportional high point | -100.00~100.00% | 100.00 |

## 04 Multi-stage Speed Parameters

| | Pr. | Explanation | Settings | Factory Setting |
|---|---|---|---|---|
| ✓ | 04-00 | 1st stage speed frequency | 0.00~599.00Hz | 0.00 |
| ✓ | 04-01 | 2nd stage speed frequency | | |
| ✓ | 04-02 | 3rd stage speed frequency | | |
| ✓ | 04-03 | 4th stage speed frequency | | |
| ✓ | 04-04 | 5th stage speed frequency | | |
| ✓ | 04-05 | 6th stage speed frequency | | |
| ✓ | 04-06 | 7th stage speed frequency | | |
| ✓ | 04-07 | 8th stage speed frequency | | |
| ✓ | 04-08 | 9th stage speed frequency | | |
| ✓ | 04-09 | 10th stage speed frequency | | |
| ✓ | 04-10 | 11th stage speed frequency | | |
| ✓ | 04-11 | 12th stage speed frequency | | |
| ✓ | 04-12 | 13th stage speed frequency | | |
| ✓ | 04-13 | 14th stage speed frequency | | |
| ✓ | 04-14 | 15th stage speed frequency | | |
| ✓ | 04-50 | PLC buffer 0 | 0~65535 | 0 |
| ✓ | 04-51 | PLC buffer 1 | | |
| ✓ | 04-52 | PLC buffer 2 | | |
| ✓ | 04-53 | PLC buffer 3 | | |
| ✓ | 04-54 | PLC buffer 4 | | |
| ✓ | 04-55 | PLC buffer 5 | | |
| ✓ | 04-56 | PLC buffer 6 | | |
| ✓ | 04-57 | PLC buffer 7 | | |
| ✓ | 04-58 | PLC buffer 8 | | |
| ✓ | 04-59 | PLC buffer 9 | | |
| ✓ | 04-60 | PLC buffer 10 | | |
| ✓ | 04-61 | PLC buffer 11 | | |
| ✓ | 04-62 | PLC buffer 12 | | |
| ✓ | 04-63 | PLC buffer 13 | | |
| ✓ | 04-64 | PLC buffer 14 | | |
| ✓ | 04-65 | PLC buffer 15 | | |
| ✓ | 04-66 | PLC buffer 16 | | |
| ✓ | 04-67 | PLC buffer 17 | | |
| ✓ | 04-68 | PLC buffer 18 | | |
| ✓ | 04-69 | PLC buffer 19 | | |

# 05 Motor Parameters

| | Pr. | Explanation | Settings | Factory Setting |
|---|---|---|---|---|
| | 05-00 | Motor parameter auto tuning | 0: No function<br>1: Rolling test for induction motor (IM)<br>2: Static test for induction motor (IM)<br>5: Surface Permanent Magnet Synchronous Motor parameters dynamic measurement<br>13: Interior Permanent Magnet Synchronous Motor static measurement | 0 |
| | 05-01 | Full-load current of induction motor 1 (A) | Determined by motors power | Determined by motors power |
| ✓ | 05-02 | Rated power of induction motor 1 (kW) | 0.00~655.35kW | #.## |
| ✓ | 05-03 | Rated speed of induction motor 1 (rpm) | 0~65535<br>1710 (60Hz 4 poles); 1410 (50Hz 4 poles) | 1710 |
| | 05-04 | Pole number of induction motor 1 | 2~64 | 4 |
| | 05-05 | No-load current of induction motor 1 (A) | 0~Pr. 05-01 factory setting | #.## |
| | 05-06 | Stator resistance (Rs) of induction motor 1 | 0.000~65.535Ω | #.### |
| | 05-07 | Rotor resistance (Rr) of induction motor 1 | 0.000~65.535Ω | #.### |
| | 05-08 | Magnetizing inductance (Lm) of induction motor 1 | 0.0~6553.5mH | #.# |
| | 05-09 | Stator inductance (Lx) of induction motor 1 | 0.0~6553.5mH | #.# |
| | 05-13 | Full-load current of induction motor 2 (A) | Determined by motors power | Determined by motors power |
| ✓ | 05-14 | Rated power of induction motor 2 (kW) | 0.00~655.35kW | #.## |
| ✓ | 05-15 | Rated speed of induction motor 2 (rpm) | 0~65535<br>1710 (60Hz 4 poles) ; 1410 (50Hz 4 poles) | 1710 |
| | 05-16 | Pole number of induction motor 2 | 2~64 | 4 |
| | 05-17 | No-load current of induction motor 2 (A) | 0~ Pr. 05-01 factory setting | #.## |

| | Pr. | Explanation | Settings | Factory Setting |
|---|---|---|---|---|
| | 05-18 | Stator resistance (Rs) of induction motor 2 | 0.000~65.535Ω | #.### |
| | 05-19 | Rotor resistance (Rr) of induction motor 2 | 0.000~65.535Ω | #.### |
| | 05-20 | Magnetizing inductance (Lm) of induction motor 2 | 0.0~6553.5mH | #.# |
| | 05-21 | Stator inductance (Lx) of induction motor 2 | 0.0~6553.5mH | #.# |
| | 05-22 | Induction motor 1 / 2 selection | 1: motor 1<br>2: motor 2 | 1 |
| ✓ | 05-23 | Frequency for Y-connection / Δ-connection switch of induction motor | 0.00~599.00Hz | 60.00 |
| | 05-24 | Y-connection / Δ-connection switch of induction motor | 0: Disable<br>1: Enable | 0 |
| ✓ | 05-25 | Delay time for Y-connection / Δ-connection switch of induction motor | 0.000~60.000 sec. | 0.200 |
| | 05-28 | Accumulative Watt-hour of motor (W-Hour) | Read only | #.# |
| | 05-29 | Accumulative Watt-hour of motor in low word (KW-Hour) | Read only | #.# |
| | 05-30 | Accumulative Watt-hour of motor in high word (KW-Hour) | Read only | #.# |
| | 05-31 | Accumulative motor operation time (Min.) | 0~1439 | 0 |
| | 05-32 | Accumulative motor operation time (Day) | 0~65535 | 0 |
| | 05-33 | Induction motor and permanent magnet motor selection | 0: Induction motor<br>1: Surface Permanent Magnet Synchronous Motor<br>2: Interior Permanent Magnet Synchronous Motor | 0 |
| | 05-34 | Full-load current of permanent magnet motor | Determined by motors power | Determined by motors power |
| ✓ | 05-35 | Rated power of permanent magnet motor | 0.00~655.35kW | Determined by motors power |

| | Pr. | Explanation | Settings | Factory Setting |
|---|---|---|---|---|
| ✓ | 05-36 | Rated speed of permanent magnet motor | 0~65535rpm | 2000 |
| | 05-37 | Pole number of permanent magnet motor | 0~65535 | 10 |
| | 05-38 | Inertia of permanent magnet motor | 0.0~6553.5kg.cm$^2$ | Determined by motors power |
| | 05-39 | Stator resistance of PM motor | 0.000~65.535Ω | 0.000 |
| | 05-40 | Permanent magnet motor Ld | 0.00~655.35mH | 0.00 |
| | 05-41 | Permanent magnet motor Lq | 0.00~655.35mH | 0.00 |
| ✓ | 05-42 | PG offset angle of PM motor | 0.0~360.0 degree | 0.0 |
| ✓ | 05-43 | Ke parameter of PM motor | 0~65535 (Unit: V / 1000rpm) | 0 |

## 06 Protection Parameters

| | Pr. | Explanation | Settings | Factory Setting |
|---|---|---|---|---|
| ✓ | 06-00 | Low voltage level | 230V series:<br>Frame A ~D: 150.0~220.0VDC<br>Frame E and above : 190.0~220.0V<br>460V series:<br>Frame A ~ D: 300.0~440.0VDC<br>Frame E and above : 380.0~440.0V<br>575V series: 420.0~520.0V<br>690V series: 450.0~660.0V | <br>180.0<br>200.0<br><br>360.0<br>400.0<br>470.0<br>480.0 |
| ✓ | 06-01 | Over-voltage stall prevention | 0: No function<br>230V series: 0.0~450.0VDC<br>460V series: 0.0~900.0VDC<br>575V series: 0.0~1318.0VDC<br>690V series: 0.0~1116.0VDC | <br>380.0<br>760.0<br>920.0<br>1087.0 |
| ✓ | 06-02 | Selection for over-voltage stall prevention | 0: Traditional over-voltage stall prevention<br>1: Smart over-voltage prevention | 0 |
| ✓ | 06-03 | Over-current stall prevention during acceleration | 230V / 460V series<br>Normal duty: 0~130% (100%: drive's rated current)<br>Light duty: 0~160% (100%: drive's rated current)<br>575V / 690V series<br>Normal duty: 0~125% (100%: drive's rated current)<br>Light duty: 0~150% (100%: drive's rated current) | <br>120<br>120<br><br>120<br>120 |
| ✓ | 06-04 | Over-current stall prevention during operation | 230V / 460V series<br>Normal duty: 0~130% (100%: drive's rated current)<br>Light duty: 0~160% (100%: drive's rated current)<br>575V / 690V series<br>Normal duty: 0~125% (100%: drive's rated current)<br>Light duty: 0~150% (100%: drive's rated current) | <br>120<br>120<br><br>120<br>120 |
| ✓ | 06-05 | Accel. / decel. time selection of stall prevention at constant speed | 0: By current accel. / decel. time<br>1: By the 1st accel. / decel. time<br>2: By the 2nd accel. / decel. time<br>3: By the 3rd accel. / decel. time<br>4: By the 4th accel. / decel. time<br>5: By auto accel. / decel. | 0 |
| ✓ | 06-06 | Over-torque detection selection (OT1) | 0: No function<br>1: Continue operation after over-torque detection during constant speed operation<br>2: Stop after over-torque detection during constant speed operation | 0 |

| | Pr. | Explanation | Settings | Factory Setting |
|---|---|---|---|---|
| | | | 3: Continue operation after over-torque detection during RUN<br>4: Stop after over-torque detection during RUN | |
| ✓ | 06-07 | Over-torque detection level (OT1) | 10~200% (100%: drive's rated current) | 120 |
| ✓ | 06-08 | Over-torque detection time (OT1) | 0.0~60.0 sec. | 0.1 |
| ✓ | 06-09 | Over-torque detection selection (OT2) | 0: No function<br>1: Continue operation after over-torque detection during constant speed operation<br>2: Stop after over-torque detection during constant speed operation<br>3: Continue operation after over-torque detection during RUN<br>4: Stop after over-torque detection during RUN | 0 |
| ✓ | 06-10 | Over-torque detection level (OT2) | 10~200% (100%: drive's rated current) | 120 |
| ✓ | 06-11 | Over-torque detection time (OT2) | 0.0~60.0 sec. | 0.1 |
| ✓ | 06-12 | Current limit | 0~200% (100%: drive's rated current) | 150 |
| ✓ | 06-13 | Electronic thermal relay selection 1 (Motor 1) | 0: Inverter motor (with external forced cooling)<br>1: Standard motor (motor with fan on the shaft)<br>2: Disable | 2 |
| ✓ | 06-14 | Electronic thermal relay action time 1 (Motor 1) | 30.0~600.0 sec. | 60.0 |
| ✓ | 06-15 | Temperature level over-heat (OH) warning | 0.0~110.0°C | 105.0 |
| ✓ | 06-16 | Stall prevention limit level | 0~100% (Pr. 06-03, Pr. 06-04) | 50 |
| | 06-17 | Fault record 1<br>(Present fault record) | 0: No fault record<br>1: Over-current during acceleration (ocA)<br>2: Over-current during deceleration (ocd)<br>3: Over-current during constant speed (ocn)<br>4: Ground fault (GFF)<br>5: IGBT short-circuit (occ)<br>6: Over-current at stop (ocS)<br>7: Over-voltage during acceleration (ovA)<br>8: Over-voltage during deceleration (ovd)<br>9: Over-voltage during constant speed (ovn)<br>10: Over-voltage at stop (ovS)<br>11: Low-voltage during acceleration (LvA)<br>12: Low-voltage during deceleration (Lvd)<br>13: Low-voltage during constant speed (Lvn)<br>14: Low-voltage at stop (LvS)<br>15: Phase loss protection (OrP) | 0 |
| | 06-18 | Fault record 2 | | 0 |
| | 06-19 | Fault record 3 | | 0 |
| | 06-20 | Fault record 4 | | 0 |
| | 06-21 | Fault record 5 | | 0 |
| | 06-22 | Fault record 6 | | 0 |

| Pr. | Explanation | Settings | Factory Setting |
|---|---|---|---|
| | | 16: IGBT over-heat (oH1)<br>17: Capacitance over-heat (oH2)<br>18: TH1 open: IGBT over-heat protection error (tH1o)<br>19: TH2 open: capacitance over-heat protection error (tH2o)<br>21: Drive over-load (oL)<br>22: Electronics thermal relay protection 1 (EoL1)<br>23: Electronics thermal relay protection 2 (EoL2)<br>24: Motor overheat (oH3) (PTC / PT100)<br>26: Over-torque 1 (ot1)<br>27: Over-torque 2 (ot2)<br>28: Low current (uC)<br>30: Memory write-in error (cF1)<br>31: Memory read-out error (cF2)<br>33: U-phase current detection error (cd1)<br>34: V-phase current detection error (cd2)<br>35: W-phase current detection error (cd3)<br>36: Clamp current detection error (Hd0)<br>37: Over-current detection error (Hd1)<br>38: Over-voltage detection error (Hd2)<br>39: IGBT short-circuit detection error (Hd3)<br>40: Auto tuning error (AUE)<br>41: PID feedback loss (AFE)<br>48: Analog current input loss (ACE)<br>49: External fault input (EF)<br>50: Emergency stop (EF1)<br>51: External base block (bb)<br>52: Password error (Pcod)<br>53: Firmware version error<br>54: Communication error (CE1)<br>55: Communication error (CE2)<br>56: Communication error (CE3)<br>57: Communication error (CE4)<br>58: Communication time-out (CE10)<br>59: PU panel time out (CP10)<br>60: Brake transistor error (bF)<br>61: Y-connection / Δ-connection switch error (ydc)<br>62: Decel. energy backup error (dEb)<br>63: Slip error (oSL)<br>64: Electromagnet switch error (ryF) | |

| | Pr. | Explanation | Settings | Factory Setting |
|---|---|---|---|---|
| | | | 72: Channel 1 (STO1~SCM1) safety loop error (STL1)<br>73: External safety gate (S1)<br>74: FIRE conflagration mode output<br>76: Safe torque off (STO)<br>77: Channel 2 (STO2~SCM2) safety loop error (STL2)<br>78: Internal loop error (STL3)<br>79: Uoc Before run U phase oc<br>80: Voc Before run V phase oc<br>81: Woc Before run W phase oc<br>82: U phase output phase loss (OPHL)<br>83: V phase output phase loss (OPHL)<br>84: W phase output phase loss (OPHL)<br>90: Inner PLC function is forced to stop<br>99: CPU instruction error（TRAP）<br>101: CANopen software disconnect 1 (CGdE)<br>102: CAN open software disconnect 2 (CHbE)<br>103: CANopen synchronous error (CSyE)<br>104: CANopen hardware disconnect (CbFE)<br>105: CANopen index setting error (CIdE)<br>106: CANopen station number setting error (CAdE)<br>107: CANopen index setting exceed limit (CFrE)<br>111: InrCOM Internal communication overtime error (ictE) | |
| ✓ | 06-23 | Fault output option 1 | 0~65535 (refer to bit table for fault code) | 0 |
| ✓ | 06-24 | Fault output option 2 | | |
| ✓ | 06-25 | Fault output option 3 | | |
| ✓ | 06-26 | Fault output option 4 | | |
| ✓ | 06-27 | Electronic thermal relay selection 2 (Motor 2) | 0: Inverter motor (with external forced cooling)<br>1: Standard motor (so motor with fan on the shaft)<br>2: Disable | 2 |
| ✓ | 06-28 | Electronic thermal relay action time 2 (Motor 2) | 30.0~600.0 sec. | 60.0 |
| ✓ | 06-29 | PTC detection selection / PT100 motion | 0: Warn and keep operation<br>1: Warn and ramp to stop<br>2: Warn and coast to stop<br>3: No warning | 0 |
| ✓ | 06-30 | PTC level | 0.0~100.0% | 50.0 |
| | 06-31 | Frequency command at malfunction | 0.00~599.00Hz | Read only |

| | Pr. | Explanation | Settings | Factory Setting |
|---|---|---|---|---|
| | 06-32 | Output frequency at malfunction | 0.00~599.00Hz | Read only |
| | 06-33 | Output voltage at malfunction | 0.0~6553.5V | Read only |
| | 06-34 | DC voltage at malfunction | 0.0~6553.5V | Read only |
| | 06-35 | Output current at malfunction | 0.0~6553.5Amp | Read only |
| | 06-36 | IGBT temperature at malfunction | -3276.7~3276.7°C | Read only |
| | 06-37 | Capacitance temperature at malfunction | -3276.7~3276.7°C | Read only |
| | 06-38 | Motor speed in rpm at malfunction | -32767~32767rpm | Read only |
| | 06-40 | Status of multi-function input terminal at malfunction | 0000h~FFFFh | Read only |
| | 06-41 | Status of multi-function output terminal at malfunction | 0000h~FFFFh | Read only |
| | 06-42 | Drive status at malfunction | 0000h~FFFFh | Read only |
| ✓ | 06-44 | STO latch selection | 0: STO latch<br>1: STO no latch | 0 |
| ✓ | 06-45 | Treatment to output phase loss protection (OPHL) | 0: Warn and keep operation<br>1: Warn and ramp to stop<br>2: Warn and coast to stop<br>3: No warning | 3 |
| ✓ | 06-46 | Detection time of output phase loss | 0.000~65.535 sec. | 0.500 |
| ✓ | 06-47 | Current detection level of output phase loss | 0.00~100.00% | 1.00 |
| ✓ | 06-48 | DC brake time of output phase loss | 0.000~65.535 sec. | 0.000 |
| ✓ | 06-49 | LvX auto reset | 0: Disable<br>1: Enable | 0 |
| ✓ | 06-50 | Time for input phase loss detection | 0.00~600.00 sec. | 0.20 |
| ✓ | 06-52 | Ripple of input phase loss | 230V series: 0.0~160.0VDC<br>460V series: 0.0~320.0VDC<br>575V series: 0.0~400.0VDC<br>690V series: 0.0~480.0VDC | 30.0 / 60.0 / 75.0 / 90.0 |

| | Pr. | Explanation | Settings | Factory Setting |
|---|---|---|---|---|
| ✓ | 06-53 | Treatment for the detected input phase loss protection (OrP) | 0: Warn and ramp to stop<br>1: Warn and coast to stop | 0 |
| ✓ | 06-55 | Derating protection | 0: Constant rated current and limit carrier wave by load current and temperature<br>1: Constant carrier frequency and limit load current by setting carrier wave<br>2: Constant rated current (same as setting 0), but close current limit | 0 |
| ✓ | 06-56 | PT100 voltage level 1 | 0.000~10.000V | 5.000 |
| ✓ | 06-57 | PT100 voltage level 2 | 0.000~10.000V | 7.000 |
| ✓ | 06-58 | PT100 level 1 frequency protect | 0.00~599.00Hz | 0.00 |
| ✓ | 06-59 | PT100 activation level 1 protect frequency delay time | 0~6000 sec. | 60 |
| ✓ | 06-60 | Software detection GFF current level | 0.0~6553.5 % | 60.0 |
| ✓ | 06-61 | Software detection GFF filter time | 0.00~655.35 sec. | 0.10 |
| | 06-63 | Fault record 1 (Day) | 0~65535 days | Read only |
| | 06-64 | Fault record 1 (Min.) | 0~1439 min. | Read only |
| | 06-65 | Fault record 2 (Day) | 0~65535 days | Read only |
| | 06-66 | Fault record 2 (Min.) | 0~1439 min. | Read only |
| | 06-67 | Fault record 3 (Day) | 0~65535 days | Read only |
| | 06-68 | Fault record 3 (Min.) | 0~1439 min. | Read only |
| | 06-69 | Fault record 4 (Day) | 0~65535 days | Read only |
| | 06-70 | Fault record 4 (Min.) | 0~1439 min. | Read only |
| ✓ | 06-71 | Low current setting level | 0.0~100.0 % | 0.0 |
| ✓ | 06-72 | Low current detection time | 0.00~360.00 sec. | 0.00 |
| ✓ | 06-73 | Treatment for low current | 0: No function<br>1: Warn and coast to stop<br>2: Warn and ramp to stop by 2nd deceleration time<br>3: Warn and operation continue | 0 |

| | Pr. | Explanation | Settings | Factory Setting |
|---|---|---|---|---|
| ✓ | 06-76 | dEb motion offset setting | 230V series: 0.0~200.0VDC<br>460V series: 0.0~200.0VDC<br>575V series: 0.0~200.0VDC<br>690V series: 0.0~200.0VDC | 20.0<br>40.0<br>50.0<br>60.0 |
| | 06-80 | Fire mode | 0: Disable<br>1: Forward operation<br>2: Reverse operation | 0 |
| ✓ | 06-81 | Operating frequency when running fire mode | 0.00~599.00Hz | 60.00 |
| ✓ | 06-82 | Enable bypass on fire mode | 0: Disable<br>1: Enable | 0 |
| ✓ | 06-83 | Bypass delay time on fire mode | 0.0~6550.0 sec. | 0.0 |
| ✓ | 06-84 | Number of times of unusual reset at fire mode | 0~10 | 0 |
| ✓ | 06-85 | Auto-restart counter time | 0.0~6000.0 sec. | 60.0 |
| | 06-86 | Fire mode motion | 0: Open loop control & manual reset fire mode<br>1: Closed loop control & manual reset fire mode<br>2: Open loop control & automatic reset fire mode<br>3: Closed loop control & automatic reset fire mode | 0 |
| ✓ | 06-87 | Fire mode PID set point | 0.00~100.00% | 0.00 |

# 07 Special Parameters

| | Pr. | Explanation | Settings | Factory Setting |
|---|---|---|---|---|
| ✓ | 07-00 | Software brake level | 230V series: 350.0~450.0VDC<br>460V series: 700.0~900.0VDC<br>575V series: 850.0~1116.0VDC<br>690V series: 939.0~1318.0VDC | 380.0<br>760.0<br>895.0<br>1057.0 |
| ✓ | 07-01 | DC brake current level | 0~100% | 0 |
| ✓ | 07-02 | DC brake time at run | 0.0~60.0 sec. | 0.0 |
| ✓ | 07-03 | DC brake time at stop | 0.0~60.0 sec. | 0.0 |
| ✓ | 07-04 | DC brake frequency at stop | 0.00~599.00Hz | 0.00 |
| ✓ | 07-05 | Voltage increasing gain | 1~200% | 100 |
| ✓ | 07-06 | Restart after momentary power loss | 0: Stop operation<br>1: Speed tracking by the speed before the power loss<br>2: Speed tracking by minimum output frequency | 0 |
| ✓ | 07-07 | Maximum power loss duration | 0.0~20.0 sec. | 2.0 |
| ✓ | 07-08 | Base block time | 0.1~5.0 sec. | 0.5 |
| ✓ | 07-09 | Current limit for speed tracking | 20~200% | 100 |
| ✓ | 07-10 | Treatment to restart after fault | 0: Stop operation<br>1: Speed tracking by current speed<br>2: Speed tracking by minimum output frequency | 0 |
| ✓ | 07-11 | Restart times after fault | 0~10 | 0 |
| ✓ | 07-12 | Speed tracking during start-up | 0: Disable<br>1: Speed tracking by maximum output frequency<br>2: Speed tracking by start-up motor frequency<br>3: Speed tracking by minimum output frequency | 0 |
| ✓ | 07-13 | dEb function selection | 0: Disable<br>1: dEb with auto accel. / decal., the output frequency will not return after power reply.<br>2: dEb with auto accel. / decal., the output frequency will return after power reply. | 0 |
| ✓ | 07-15 | Dwell time at accel. | 0.00~600.00 sec. | 0.00 |
| ✓ | 07-16 | Dwell frequency at accel. | 0.00~599.00Hz | 0.00 |
| ✓ | 07-17 | Dwell time at decel. | 0.00~600.00 sec. | 0.00 |
| ✓ | 07-18 | Dwell frequency at decel. | 0.00~599.00Hz | 0.00 |
| ✓ | 07-19 | Fan cooling control | 0: Fan always ON<br>1: Fan will be OFF after the AC motor drive stops 1 minute<br>2: When the AC motor drive runs, the fan is ON. When the AC motor drive stops, the fan is OFF<br>3: Fan turns ON when preliminary IGBT temperature (around 60°C) is attained.<br>4: Fan always OFF | 0 |

| | Pr. | Explanation | Settings | Factory Setting |
|---|---|---|---|---|
| ✓ | 07-20 | Emergency stop (EF) & force to stop selection | 0: Coast to stop<br>1: By deceleration time 1<br>2: By deceleration time 2<br>3: By deceleration time 3<br>4: By deceleration time 4<br>5: System deceleration<br>6: Automatic deceleration | 0 |
| ✓ | 07-21 | Auto energy-saving operation | 0: Disable<br>1: Enable | 0 |
| ✓ | 07-22 | Energy-saving gain | 10~1000% | 100 |
| ✓ | 07-23 | Auto voltage regulation (AVR) function | 0: Enable AVR<br>1: Disable AVR<br>2: Disable AVR during deceleration | 0 |
| ✓ | 07-24 | Filter time of torque command (V/F and SVC control mode) | 0.001~10.000 sec. | 0.500 |
| ✓ | 07-25 | Filter time of slip compensation (V/F and SVC control mode) | 0.001~10.000 sec. | 0.100 |
| ✓ | 07-26 | Torque compensation gain (V/F and SVC control mode) | IM: 0~10 (when Pr. 05-33 = 0)<br>PM: 0~5000 (when Pr. 05-33 = 1 or 2) | 0 |
| ✓ | 07-27 | Slip compensation gain (V/F and SVC control mode) | 0.00~10.00<br>(SVC mode default value: 1) | 0.00 |
| ✓ | 07-29 | Slip deviation level | 0.0~100.0%<br>0：No detect | 0 |
| ✓ | 07-30 | Over slip deviation detection time | 0.0~10.0 sec. | 1.0 |
| ✓ | 07-31 | Over slip deviation treatment | 0: Warn and keep operation<br>1: Warn and ramp to stop<br>2: Warn and coast to stop<br>3: No warning | 0 |
| ✓ | 07-32 | Motor shock compensation factor | 0~10000 | 1000 |
| ✓ | 07-33 | Auto restart internal of fault | 0.0~6000.0 sec. | 60.0 |

# 08 High-function PID Parameters

| | Pr. | Explanation | Settings | Factory Setting |
|---|---|---|---|---|
| ✓ | 08-00 | Input terminal for PID feedback | 0: No function<br>1: Negative PID feedback from analog input (Pr. 03-00)<br>4: Positive PID feedback from analog input (Pr. 03-00) | 0 |
| ✓ | 08-01 | Proportional gain (P) | 0.0~100.0% | 1.0 |
| ✓ | 08-02 | Integral time (I) | 0.00~100.00 sec. | 1.00 |
| ✓ | 08-03 | Derivative control (D) | 0.00~1.00 sec. | 0.00 |
| ✓ | 08-04 | Upper limit of integral control | 0.0~100.0% | 100.0 |
| ✓ | 08-05 | PID output command limit | 0.0~110.0% | 100.0 |
| ✓ | 08-06 | PID feedback value by communication protocol | -200.00~200.00% | Read only |
| ✓ | 08-07 | PID delay time | 0.0~35.0 sec. | 0.0 |
| ✓ | 08-08 | Feedback signal detection time | 0.0~3600.0 sec. | 0.0 |
| ✓ | 08-09 | Feedback signal fault treatment | 0: Warn and keep operation<br>1: Warn and ramp to stop<br>2: Warn and coast to stop<br>3: Warn and operate at last frequency | 0 |
| ✓ | 08-10 | Sleep frequency | 0.00~599.00Hz | 0.00 |
| ✓ | 08-11 | Wake-up frequency | 0.00~599.00Hz | 0.00 |
| ✓ | 08-12 | Sleep time | 0.0~6000.0 sec. | 0.0 |
| ✓ | 08-13 | PID deviation level | 1.0~50.0% | 10.0 |
| ✓ | 08-14 | PID deviation time | 0.1~300.0 sec. | 5.0 |
| ✓ | 08-15 | Filter time for PID feedback | 0.1~300.0 sec. | 5.0 |
| ✓ | 08-16 | PID compensation selection | 0: Parameter setting<br>1: Analog input | 0 |
| ✓ | 08-17 | PID compensation | -100.0~100.0% | 0.0 |
| | 08-18 | Setting of sleep mode function | 0: Follow PID output command<br>1: Follow PID feedback signal | 0 |
| ✓ | 08-19 | Wakeup integral limit | 0.0~200.0% | 50.0 |
| | 08-20 | PID mode selection | 0: Serial connection<br>1: Parallel connection | 0 |
| | 08-21 | Enable PID to change operation direction | 0: Operation direction can be changed<br>1: Operation direction cannot be changed | 0 |
| ✓ | 08-22 | Wakeup delay time | 0.00~600.00 sec. | 0.00 |

# 09 Communication Parameters

| | Pr. | Explanation | Settings | Factory Setting |
|---|---|---|---|---|
| ✓ | 09-00 | COM1 Communication address | 1~254 | 1 |
| ✓ | 09-01 | COM1 transmission speed | 4.8~115.2Kbps | 9.6 |
| ✓ | 09-02 | COM1 transmission fault treatment | 0: Warn and continue operation<br>1: Warn and ramp to stop<br>2: Warn and coast to stop<br>3: No warning and continue operation | 3 |
| ✓ | 09-03 | COM1 time-out detection | 0.0~100.0 sec. | 0.0 |
| ✓ | 09-04 | COM1 communication protocol | 1: 7, N, 2 (ASCII)<br>2: 7, E, 1 (ASCII)<br>3: 7, O, 1 (ASCII)<br>4: 7, E, 2 (ASCII)<br>5: 7, O, 2 (ASCII)<br>6: 8, N, 1 (ASCII)<br>7: 8, N, 2 (ASCII)<br>8: 8, E, 1 (ASCII)<br>9: 8, O, 1 (ASCII)<br>10: 8, E, 2 (ASCII)<br>11: 8, O, 2 (ASCII)<br>12: 8, N, 1 (RTU)<br>13: 8, N, 2 (RTU)<br>14: 8, E, 1 (RTU)<br>15: 8, O, 1 (RTU)<br>16: 8, E, 2 (RTU)<br>17: 8, O, 2 (RTU) | 1 |
| ✓ | 09-09 | Communication response delay time | 0.0~200.0ms | 2.0 |
| | 09-10 | Main frequency of the communication | 0.00~599.00Hz | 60.00 |
| ✓ | 09-11 | Block transfer 1 | 0~65535 | 0 |
| ✓ | 09-12 | Block transfer 2 | 0~65535 | 0 |
| ✓ | 09-13 | Block transfer 3 | 0~65535 | 0 |
| ✓ | 09-14 | Block transfer 4 | 0~65535 | 0 |
| ✓ | 09-15 | Block transfer 5 | 0~65535 | 0 |
| ✓ | 09-16 | Block transfer 6 | 0~65535 | 0 |
| ✓ | 09-17 | Block transfer 7 | 0~65535 | 0 |
| ✓ | 09-18 | Block transfer 8 | 0~65535 | 0 |
| ✓ | 09-19 | Block transfer 9 | 0~65535 | 0 |
| ✓ | 09-20 | Block transfer 10 | 0~65535 | 0 |
| ✓ | 09-21 | Block transfer 11 | 0~65535 | 0 |
| ✓ | 09-22 | Block transfer 12 | 0~65535 | 0 |

| | Pr. | Explanation | Settings | Factory Setting |
|---|---|---|---|---|
| ✓ | 09-23 | Block transfer 13 | 0~65535 | 0 |
| ✓ | 09-24 | Block transfer 14 | 0~65535 | 0 |
| ✓ | 09-25 | Block transfer 15 | 0~65535 | 0 |
| ✓ | 09-26 | Block transfer 16 | 0~65535 | 0 |
| | 09-30 | Communication decoding method | 0: Decoding method 1 (20xx)<br>1: Decoding method 2 (60xx) | 1 |
| | 09-31 | Internal communication protocol | -12: Internal PLC control<br>-10: Internal communication Master<br>-8: Internal communication Slave 8<br>-7: Internal communication Slave 7<br>-6: Internal communication Slave 6<br>-5: Internal communication Slave 5<br>-4: Internal communication Slave 4<br>-3: Internal communication Slave 3<br>-2: Internal communication Slave 2<br>-1: Internal communication Slave 1<br>0: Modbus 485<br>1: BACnet | 0 |
| ✓ | 09-33 | PLC command force to 0 | 0~65535 | 0 |
| | 09-35 | PLC address | 1~254 | 2 |
| | 09-36 | CANopen slave address | 0: Turn off<br>0~127 | 0 |
| | 09-37 | CANopen speed | 0: 1Mbps<br>1: 500Kbps<br>2: 250Kbps<br>3: 125Kbps<br>4: 100Kbps (Delta only)<br>5: 50Kbps | 0 |
| | 09-39 | CANopen warning record | bit 0: CANopen Guarding Time out<br>bit 1: CANopen heartbeat Time out<br>bit 2: CANopen SYNC Time out<br>bit 3: CANopen SDO Time out<br>bit 4: CANopen SDO buffer overflow<br>bit 5: Can Bus off<br>bit 6: Error protocol of CANopen<br>bit 8: The setting values of CANopen indexes are fail<br>bit 9: The setting value of CANopen address is fail<br>bit 10: The checksum value of CANopen indexes is fail | Read only |

| Pr. | Explanation | Settings | Factory Setting |
|---|---|---|---|
| 09-40 | CANopen decoding method | 0: Delta defined decoding method<br>1: CANopen DS402 standard | 1 |
| 09-41 | CANopen communication status | 0: Node Reset State<br>1: Com Reset State<br>2: Boot up State<br>3: Pre Operation State<br>4: Operation State<br>5: Stop State | Read Only |
| 09-42 | CANopen control status | 0: Not Ready for Use State<br>1: Inhibit Start State<br>2: Ready to Switch on State<br>3: Switched on State<br>4: Enable Operation State<br>7: Quick Stop Active State<br>13: Error Reaction Active State<br>14: Error State | Read Only |
| 09-45 | CANopen master function | 0: Disable<br>1: Enable | 0 |
| 09-46 | CANopen master address | 0~127 | 100 |
| 09-50 | BACnet MAC ID | 0~127 | 10 |
| 09-51 | BACnet communication speed | 9.6~76.8Kbps | 38.4 |
| 09-52 | BACnet Device index L | 0~65535 | 10 |
| 09-53 | BACnet Device index H | 0~63 | 0 |
| 09-55 | BACnet maximum packet | 0~127 | 127 |
| 09-56 | BACnet password | 0~65535 | 0 |
| 09-60 | Identifications for communication card | 0: No communication card<br>1: DeviceNet slave<br>2: Profibus-DP slave<br>3: CANopen slave / master<br>4: Modbus -TCP Slave<br>5: EtherNet/IP Slave | Read Only |
| 09-61 | Firmware version of communication card | Read only | ## |
| 09-62 | Product code | Read only | ## |
| 09-63 | Error code | Read only | ## |
| ✓ 09-70 | Address of communication card (for DeviceNet or PROFIBUS) | DeviceNet: 0-63<br>Profibus-DP: 1-125 | 1 |
| ✓ 09-71 | Communication card speed (for DeviceNet) | Standard DeviceNet:<br>0: 100Kbps<br>1: 125Kbps<br>2: 250Kbps | 2 |

| | Pr. | Explanation | Settings | Factory Setting |
|---|---|---|---|---|
| | | | 3: 1Mbps (Delta only)<br>Non-standard DeviceNet: (Delta only)<br>0: 10Kbps<br>1: 20Kbps<br>2: 50Kbps<br>3: 100Kbps<br>4: 125Kbps<br>5: 250Kbps<br>6: 500Kbps<br>7: 800Kbps<br>8: 1Mbps | |
| ✓ | 09-72 | Additional settings for communication card speed (for DeviceNet) | 0: Standard DeviceNet<br>In this mode, baud rate can only be 100Kbps, 125Kbps, 250Kbps in standard DeviceNet speed<br>1: Nonstandard DeviceNet<br>In this mode, the baud rate of DeviceNet can be the same as CANopen (0-8). | 0 |
| ✓ | 09-75 | IP configuration of the communication card (for MODBUS TCP) | 0: Static IP<br>1: Dynamic IP (DHCP) | 0 |
| ✓ | 09-76 | IP address 1 of the communication card (for MODBUS TCP) | 0~65535 | 0 |
| ✓ | 09-77 | IP address 2 of the communication card (for MODBUS TCP) | 0~65535 | 0 |
| ✓ | 09-78 | IP address 3 of the communication card (for MODBUS TCP) | 0~65535 | 0 |
| ✓ | 09-79 | IP address 4 of the communication card (for MODBUS TCP) | 0~65535 | 0 |
| ✓ | 09-80 | Address mask 1 of the communication card (for MODBUS TCP) | 0~65535 | 0 |
| ✓ | 09-81 | Address mask 2 of the communication card (for MODBUS TCP) | 0~65535 | 0 |
| ✓ | 09-82 | Address mask 3 of the communication card (for MODBUS TCP) | 0~65535 | 0 |
| ✓ | 09-83 | Address mask 4 of the communication card (for MODBUS TCP) | 0~65535 | 0 |
| ✓ | 09-84 | Getway address 1 of the communication card (for MODBUS TCP) | 0~65535 | 0 |
| ✓ | 09-85 | Getway address 2 of the communication card (for MODBUS TCP) | 0~65535 | 0 |

| | Pr. | Explanation | Settings | Factory Setting |
|---|---|---|---|---|
| ✓ | 09-86 | Getway address 3 of the communication card (for MODBUS TCP) | 0~65535 | 0 |
| ✓ | 09-87 | Getway address 4 of the communication Card (for MODBUS TCP) | 0~65535 | 0 |
| ✓ | 09-88 | Password for communication card (Low word) (for MODBUS TCP) | 0~99 | 0 |
| ✓ | 09-89 | Password for communication card (High word) (for MODBUS TCP) | 0~99 | 0 |
| ✓ | 09-90 | Reset communication card (for MODBUS TCP) | 0: No function<br>1: Restore to factory setting | 0 |
| ✓ | 09-91 | Additional settings for communication card (for MODBUS TCP) | bit 0: Enable IP filter<br>bit 1: Internet parameters enable (1bit).<br>After updating the parameters of communication card; disable.<br>bit 2: Login password enable (1bit).<br>After updating the parameters of communication card; disable. | 0 |
| | 09-92 | Status of communication card (for MODBUS TCP) | bit 0: Password enable<br>When the communication card is set with password; enabled.<br>When the password is cleared; disabled. | 0 |

# 10 PID Control Parameters

NOTE IM: Induction Motor; PM: Permanent Magnet Motor

| | Pr. | Explanation | Settings | Factory Setting |
|---|---|---|---|---|
| ✓ | 10-31 | I/F mode, current command | 0~150% of motor rated current | 40 |
| ✓ | 10-32 | PM sensorless observer bandwidth for high speed zone | 0.00~600.00Hz | 5.00 |
| ✓ | 10-34 | PM sensorless observer low-pass filter gain | 0.00~655.35 | 1.00 |
| ✓ | 10-39 | Frequency when switch from I/F mode to PM sensorless mode | 0.00~599.00Hz | 20.00 |
| ✓ | 10-40 | Frequency when switch from PM sensorless mode to I/F mode | 0.00~599.00Hz | 20.00 |
| ✓ | 10-41 | I/F mode, Id current low pass-filter time | 0.0~6.0 sec. | 0.2 |
| ✓ | 10-42 | Initial angle detection pulse value | 0.0~3.0 | 1.0 |
| ✓ | 10-49 | Zero voltage time while start up | 0.000~60.000 sec. | 0.000 |
| ✓ | 10-51 | Injection frequency | 0~1200Hz | 500 |
| ✓ | 10-52 | Injection magnitude | 0.0~200.0V | 15.0 / 30.0 |
| ✓ | 10-53 | PM motor initial rotor position detection method | 0: No function<br>1: Internal 1/4 rated current attracting the rotor to zero degrees<br>2: High frequency injection<br>3: Pulse injection | 0 |

# 11 Advanced Parameters

Group 11 Advanced Parameters are reserved.

# 12 PUMP Parameters

| | Pr. | Explanation | Settings | Factory Setting |
|---|---|---|---|---|
| | 12-00 | Cycle Control | 0: Disable<br>1: Time cycle<br>2: Qualitative cycle<br>3: Qualitative control<br>4: Time cycle + Qualitative cycle<br>5: Time cycle + Qualitative control | 0 |
| | 12-01 | Number of Motors to be connected | 1~8 | 1 |
| | 12-02 | Operating time of each motor (minutes) | 0~65500 min. | 0 |
| | 12-03 | Delay Time due to the Acceleration (or the Increment ) at Motor Switching (seconds) | 0.0~3600.0 sec. | 1.0 |
| | 12-04 | Delay Time due to the Deceleration ( or the Decrement) at Motor Switching (seconds) | 0.0~3600.0 sec. | 1.0 |
| ✓ | 12-05 | Delay time while fixed quantity circulation at Motor Switching (seconds) | 0.0~3600.0 sec. | 10.0 |
| ✓ | 12-06 | Frequency when switching motors at fixed quantity circulation (Hz) | 0.00~599.00Hz | 60.0 |
| | 12-07 | Action to do when Fixed Quantity Circulation breaks down | 0: Turn off all output<br>1: Motors powered by mains electricity continues to operate | 0 |
| ✓ | 12-08 | Frequency when stopping auxiliary motor (Hz) | 0.00~599.00Hz | 0.00 |

# 13 Industry Application Parameters

| Pr. | Explanation | Settings | Factory Setting |
|---|---|---|---|
| 13-00 | Industry Parameters combination | 0: Disable<br>1: User Parameter<br>2: Compressor (IM)<br>3: Fan<br>4: Pump<br>10: Air Handling Unit, AHU | 0 |
| 13-01 ~ 13-99 | Industry Parameters 1~99 | 0.00~655.35 | 0.00 |

[ This page intentionally left blank ]

# *Chapter 12 Description of Parameter Settings*

## 12-1 Description of parameter settings

### 00 Drive Parameters

✓ This parameter can be set during operation.

**00-00** Identity Code of the AC Motor Drive

Factory Setting: #.#

Settings Read Only

**00-01** Display AC Motor Drive Rated Current

Factory Setting: #.#

Settings Read Only

📖 Pr. 00-00 displays the identity code of the AC motor drive. Using the following table to check if Pr.00-01 setting is the rated current of the AC motor drive. Pr.00-01 corresponds to the identity code Pr.00-00.

📖 The factory setting is the rated current for light duty. Please set Pr.00-16 to 1 to display the rated current for the normal duty.

| 230V series | | | | | | | | |
|---|---|---|---|---|---|---|---|---|
| Frame | A | | | | | B | | |
| kW | 0.75 | 1.5 | 2.2 | 3.7 | 5.5 | 7.5 | 11 | 15 |
| HP | 1 | 2 | 3 | 5 | 7.5 | 10 | 15 | 20 |
| Pr.00-00 | 4 | 6 | 8 | 10 | 12 | 14 | 16 | 18 |
| Rated Current for Light Duty (A) | 5 | 7.5 | 10 | 15 | 21 | 31 | 46 | 61 |
| Rated Current for Normal Duty (A) | 3 | 5 | 8 | 11 | 17 | 25 | 33 | 49 |
| Frame | C | | | D | | E | | |
| kW | 18.5 | 22 | 30 | 37 | 45 | 55 | 75 | 90 |
| HP | 25 | 30 | 40 | 50 | 60 | 75 | 100 | 125 |
| Pr.00-00 | 20 | 22 | 24 | 26 | 28 | 30 | 32 | 34 |
| Rated Current for Light Duty (A) | 75 | 90 | 105 | 146 | 180 | 215 | 276 | 322 |
| Rated Current for Normal Duty (A) | 65 | 75 | 90 | 120 | 146 | 180 | 215 | 255 |

| 460V series | | | | | | | | | | | | | |
|---|---|---|---|---|---|---|---|---|---|---|---|---|---|
| Frame | A | | | | | | | B | | | C | | |
| kW | 0.75 | 1.5 | 2.2 | 3.7 | 4.0 | 5.5 | 7.5 | 11 | 15 | 18.5 | 22 | 30 | 37 |
| HP | 1 | 2 | 3 | 5 | 5 | 7.5 | 10 | 15 | 20 | 25 | 30 | 40 | 50 |
| Pr.00-00 | 5 | 7 | 9 | 11 | 93 | 13 | 15 | 17 | 19 | 21 | 23 | 25 | 27 |
| Rated Current for Light Duty (A) | 3 | 4.2 | 5.5 | 8.5 | 10.5 | 13 | 18 | 24 | 32 | 38 | 45 | 60 | 73 |
| Rated Current for Normal Duty (A) | 2.8 | 3.0 | 4.0 | 6.0 | 9.0 | 10.5 | 12 | 18 | 24 | 32 | 38 | 45 | 60 |

| Frame | D0 | | D | | E | | F | | G | | H | | | |
|---|---|---|---|---|---|---|---|---|---|---|---|---|---|---|
| kW | 45 | 55 | 75 | 90 | 110 | 132 | 160 | 185 | 220 | 280 | 315 | 355 | 400 | 500 |
| HP | 60 | 75 | 100 | 125 | 150 | 175 | 215 | 250 | 300 | 375 | 425 | 475 | 536 | 675 |
| Pr.00-00 | 29 | 31 | 33 | 35 | 37 | 39 | 41 | 43 | 45 | 47 | 49 | 51 | 53 | 55 |
| Rated Current for Light Duty (A) | 91 | 110 | 150 | 180 | 220 | 260 | 310 | 370 | 460 | 530 | 616 | 683 | 770 | 930 |
| Rated Current for Normal Duty (A) | 73 | 91 | 110 | 150 | 180 | 220 | 260 | 310 | 370 | 460 | 550 | 616 | 683 | 866 |

| 575V series | | | | | | | |
|---|---|---|---|---|---|---|---|
| Frame | A | | | B | | | |
| kW | 1.5 | 2.2 | 3.7 | 5.5 | 7.5 | 11 | 15 |
| HP | 2 | 3 | 5 | 7.5 | 10 | 15 | 20 |
| Pr.00-00 | 505 | 506 | 507 | 508 | 509 | 510 | 511 |
| Rated Current for Light Duty (A) | 3 | 4.3 | 6.7 | 9.9 | 12.1 | 18.7 | 24.2 |
| Rated Current for Normal Duty (A) | 2.5 | 3.6 | 5.5 | 8.2 | 10 | 15.5 | 20 |

| 690V series | | | | | | | | | | |
|---|---|---|---|---|---|---|---|---|---|---|
| Frame | C | | | | D | | E | | | |
| kW | 18.5 | 22 | 30 | 37 | 45 | 55 | 75 | 90 | 110 | 132 |
| HP | 25 | 30 | 40 | 50 | 60 | 75 | 100 | 125 | 150 | 175 |
| Pr.00-00 | 612 | 613 | 614 | 615 | 616 | 617 | 618 | 619 | 620 | 621 |
| Rated Current for Light Duty (A) | 24 | 30 | 36 | 45 | 54 | 67 | 86 | 104 | 125 | 150 |
| Rated Current for Normal Duty (A) | 20 | 24 | 30 | 36 | 45 | 54 | 67 | 86 | 104 | 125 |

| Frame | F | | G | | H | | | |
|---|---|---|---|---|---|---|---|---|
| kW | 160 | 200 | 250 | 315 | 400 | 450 | 560 | 630 |
| HP | 215 | 270 | 335 | 425 | 530 | 600 | 745 | 840 |
| Pr.00-00 | 622 | 686 | 687 | 626 | 628 | 629 | 631 | 632 |
| Rated Current for Light Duty (A) | 180 | 220 | 290 | 350 | 430 | 465 | 590 | 675 |
| Rated Current for Normal Duty (A) | 150 | 180 | 220 | 290 | 350 | 385 | 465 | 675 |

## 00-02 Parameter Reset

Factory Setting: 0

Settings 0: No Function
1: Parameter write protect
5: Reset KWH display to 0
6: Reset PLC (including CANopen Master Index)
7: Reset CANopen Index (Slave)
9: All parameters are reset to factory settings(base frequency is 50Hz)
10: All parameters are reset to factory settings (base frequency is 60Hz)

- When it is set to 1, all parameters are read only except Pr.00-02~00-08 and it can be used with password setting for password protection. It needs to set Pr.00-02 to 0 before changing other parameter settings.
- When it is set to 5, KWH display value can be reset to 0 even when the drive is operating. Pr. 05-26, 05-27, 05-28, 05-29, 05-30 reset to 0.
- When it is set to 6: clear internal PLC program (includes the related settings of PLC internal CANopen master)
- When it is set to 7: reset the related settings of CANopen slave.
- When it is set to 9 or 10: all parameters are reset to factory settings. If password is set in Pr.00-08, input the password set in Pr.00-07 to reset to factory settings.
- When it is set to 6、7、9、10, please re-power the motor drive after setting.

## 00-03 Start-up Display Selection

Factory setting: 0

Settings
0: Display the frequency command (F)
1: Display the actual output frequency (H)
2: Display User define (U)
3: Output current ( A)

This parameter determines the start-up display page after power is applied to the drive. User defined choice display according to the setting in Pr.00-04.

## 00-04 Content of Multi-function Display

Factory setting: 3

Settings
0: Display output current (A) (Unit: Amps)
1: Display counter value (c) (Unit: CNT)
2: Display actual output frequency (H) (Unit: Hz)
3: Display DC-BUS voltage (v) (Unit: VDC)
4: Display output voltage (E) (Unit: VAC)
5: Display output power angle (n) (Unit: deg)
6: Display output power in kW (P) (Unit: kW)
7: Display actual motor speed rpm (Unit: rpm)
10: Display PID feedback (b) (Unit: %)
11: Display AVI1 in % (1.) (Unit: %)
12: Display ACI in % (2.) (Unit: %)
13: Display AVI2 in % (3.) (Unit: %)
14: Display the temperature of IGBT (i.) (Unit: °C)
15: Display the temperature of capacitance (c.) (Unit: °C)
16: The status of digital input ON/OFF (i)
17: The status of digital output ON/OFF (o)
18: Display the multi-step speed that is executing (S)
19: The corresponding CPU pin status of digital input (d)
20: The corresponding CPU pin status of digital output (0.)
25: Overload counting (0.00~100.00%) (h.) (Unit: %)
26: GFF Ground Fault (G.) (Unit: %)
27: DC-Bus voltage ripple (r.) (Unit: VDC)
28: Display PLC register D1043 data (C) display in hexadecimal
30 : Display output of user defined (U)
31 : H page x 00-05 Display user Gain (K)
34: Operation speed of fan (F.) (Unit: %)
36: Present operating carrier frequency of drive (Hz) (J.)
38: Display drive status (6.)
41: KWH display (J) (Unit: kWh)
42: PID reference (h) (Unit: %)
43: PID offset (o.) (Unit: %)

44: PID output frequency (b.) (Unit: Hz)

45: Hardware ID

**NOTE**

1. It can display negative values when setting analog input bias (Pr.03-03~03-10).
   Example: assume that AVI1 input voltage is 0V, Pr.03-03 is 10.0% and Pr.03-07 is 4 (Serve bias as the center).
2. Example: If REV, MI1 and MI6 are ON, the following table shows the status of the terminals.
   0: OFF, 1: ON

| Terminal | MI15 | MI14 | MI13 | MI12 | MI11 | MI10 | MI8 | MI7 | MI6 | MI5 | MI4 | MI3 | MI2 | MI1 | REV | FWD |
|---|---|---|---|---|---|---|---|---|---|---|---|---|---|---|---|---|
| Status | 0 | 0 | 0 | 0 | 0 | 0 | 0 | 0 | 1 | 0 | 0 | 0 | 0 | 1 | 1 | 0 |

   MI10~MI15 are the terminals for extension cards (Pr.02-26~02-31).
   If REV, MI1 and MI6 are ON, the value is 0000 0000 1000 0110 in binary and 0086h in HEX. When Pr.00-04 is set to “16” or “19”, it will display “0086h” with LED U is ON on the keypad KPC-CE01. The setting 16 is the status of digital input by Pr.02-12 setting and the setting 19 is the corresponding CPU pin status of digital input, the FWD/REV action and the three-wire MI are not controlled by Pr.02-12. User can set to 16 to monitor digital input status and then set to 19 to check if the wire is normal.
3. Assume that RY1: Pr.02-13 is set to 9 (Drive ready). After applying the power to the AC motor drive, if there is no other abnormal status, the contact will be ON. The display status will be shown as follows.
   N.O. switch status:

| Terminal | MO20~MO17 | | | | MO16~MO13 | | | | MO12~MO10 | | | | Reserved | Reserved | RY3 | RY2 | RY1 |
|---|---|---|---|---|---|---|---|---|---|---|---|---|---|---|---|---|---|
| Status | 0 | 0 | 0 | 0 | 0 | 0 | 0 | 0 | 0 | 0 | 0 | 0 | 0 | 0 | 0 | 0 | 1 |

   At the meanwhile, if Pr.00-04 is set to 17 or 20, it will display in hexadecimal “0001h” with LED U is ON on the keypad. The setting 17 is the status of digital output by Pr.02-18 setting and the setting 20 is the corresponding CPU pin status of digital output. User can set 17 to monitor the digital output status and then set to 20 to check if the wire is normal.
4. If Pr.00-04 = 25, when display value reaches 100.00%, the drive will show “oL” as an overload warning.
5. If Pr.00-04 = 38,
   bit 0: The drive is running forward.
   bit 1: The drive is running backward.
   bit 2: The drive is ready.
   bit 3: Errors occurred on the drive.
   bit 4: The drive is running.
   bit 5: Warnings on the drive.

## 00-05 Coefficient Gain in Actual Output Frequency

Factory Setting: 1.00

Settings 0.00~160.00

This parameter is to set coefficient gain in actual output frequency. Set Pr.00-04= 31 to display the calculation result on the screen (calculation = output frequency * Pr.00-05).

## 00-06 Software Version

Factory Setting:
Read only

Settings Read only

## 00-07 Parameter Protection Password Input

Factory Setting: 0

Settings 0~65535

Display 0~4 (the times of password attempts)

- This parameter allows user to enter their password (which is set in Pr.00-08) to unlock the parameter protection and to make changes to the parameter.
- Pr.00-07 and Pr.00-08 are used to prevent the personal miss-operation.
- When the user have forgotten the password, clear the setting by input 9999 and press ENTER key, then input 9999 again and press Enter within 10 seconds. After decoding, all the settings will return to factory setting.

## 00-08 Parameter Protection Password Setting

Factory Setting: 0

Settings 0~65535

0: No password protection / password is entered correctly (Pr00-07)

1: Password has been set

- To set a password to protect your parameter settings. In the first time, password can be set directly. After setting, the value of 00-08 will become 1, which means password protection is activated. When the password is set, if any parameter setting needs to be changed, be sure to enter correct password in 00-07, and then the password will be inactivated temporarily with 00-08 changing to 0. At this time, parameters setting can be changed. After setting, re-power the motor drive, and password will be activated again.
- To cancel the password protection, after entering correct password in 00-07, 00-08 also needs to be set as 0 again to inactive password protection permanently. If not, password protection will be active after motor drive re-power.
- The keypad copy function will work normally only when the password protection is inactivated temporarily or permanently, and password set in 00-08 will not be copied to keypad. So when copying parameters from keypad to motor drive, the password need to be set manually again in the motor drive to active password protection.

Password Decode Flow Chart

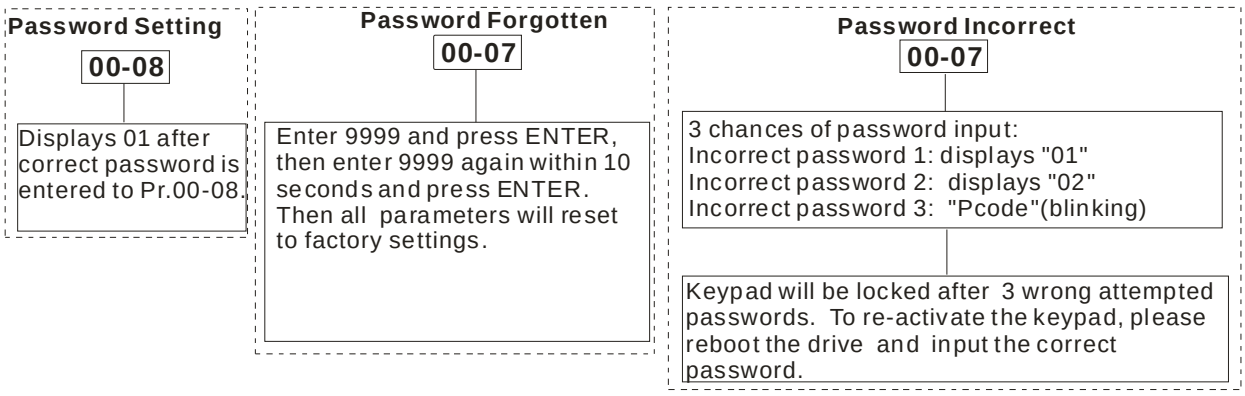

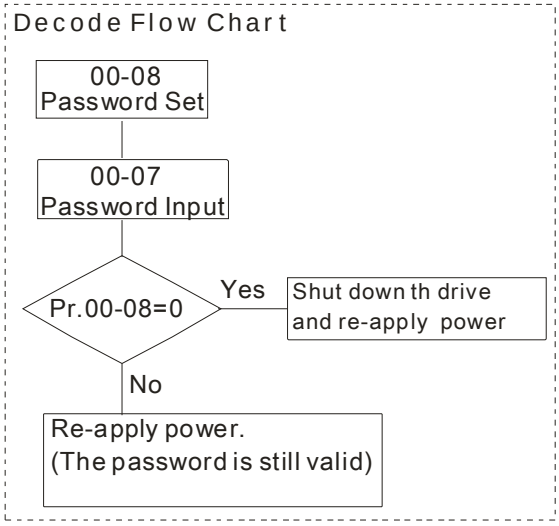


## 00-11 Control of Speed Mode

Factory Setting: 0

Settings 0: VF (IM V/F control)

2: SVC(IM/PM sensorless vector control)

This parameter determines the control method of the AC motor drive:

0: (IM V/f control): user can design proportion of V/f as required and can control multiple motors simultaneously.

2: (IM/PM Sensorless vector control): get the optimal control by the auto-tuning of motor parameters.

When 00-10=0, and set Pr.00-11 to 0, the V/F control diagram is shown as follows.

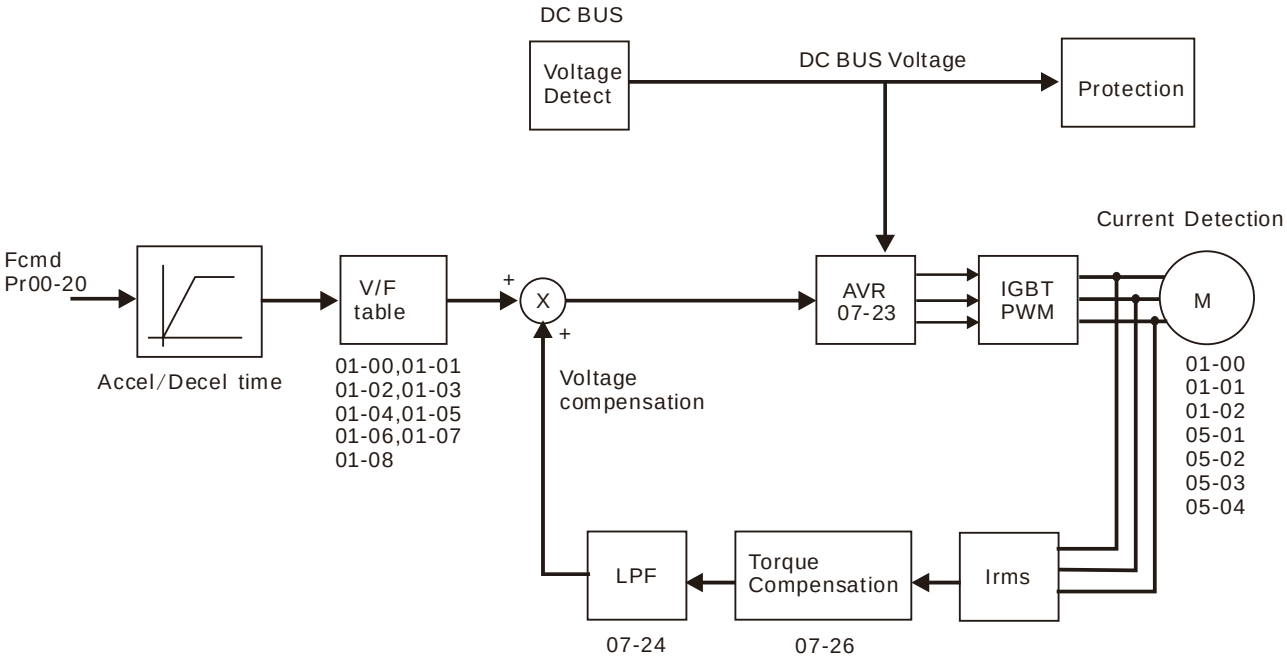

When 00-10=0, and set Pr.00-11 to 2, the sensorless vector control diagram is shown as follows.

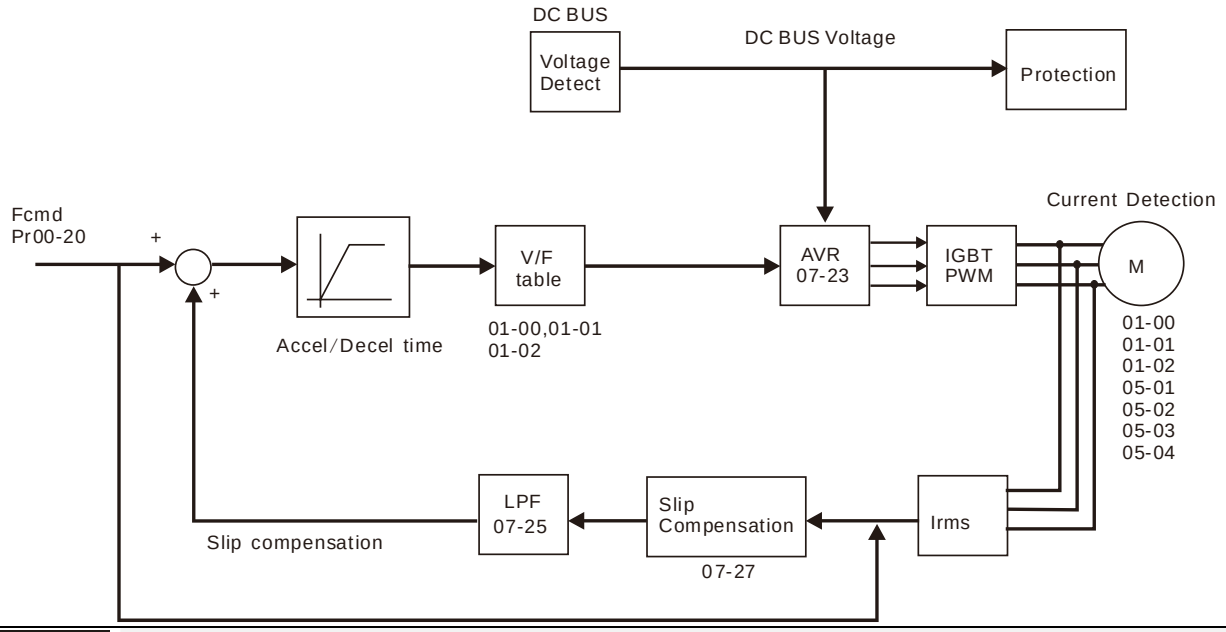


## 00-16 Load Selection

Factory Setting: 0

Settings 0: Light load

1: Normal load

Light duty: over load ability is 120% rated output current in 60 second. Please refer to Pr.00-17 for the setting of carrier. Refer to chapter 9 (specifications) or Pr.00-01 for the rated current.

Normal duty: over load ability is 120% rated output current in 60 second (over load ability is 160% rated output current in 3 second). Please refer to Pr.00-17 for the setting of carrier wave. Refer to chapter 9 (specifications) or Pr.00-01 for the rated current.

Pr.00-01 changes as the setting of Pr.00-16 changes. The default setting and maximum setting range of Pr.06-03, 06-04 will change as the setting of Pr.00-16 changes.

## 00-17 Carrier Frequency

Factory setting: Table below

Settings 2~15kHz

This parameter determinates the PWM carrier frequency of the AC motor drive.

| 230V | | | | |
|---|---|---|---|---|
| Settings | | 2~15kHz | 2~10kHz | 2~9kHz |
| Light Duty | Models | 1~20HP [0.75~15kW] | 25~60HP [18.5~45kW] | 75~125HP [55~90kW] |
| | Factory Setting | 8kHz | 6kHz | 4kHz |
| Normal Duty | Models | 0.5~15HP [0.4~11kW] | 20~50HP [15~37kW] | 60~100HP [45~75kW] |
| | Factory Setting | 8kHz | 6kHz | 4kHz |

| 460V | | | | |
|---|---|---|---|---|
| Settings | | 2~15kHz | 2~10kHz | 2~09kHz |
| Light Duty | Models | 1~25HP [0.75~18.5kW] | 30~100HP [22~75kW] | 125~536HP [90~400kW] |
| | Factory Setting | 8kHz | 6kHz | 4kHz |
| Normal Duty | Models | 0.5~20HP [0.4~15kW] | 25~75HP [18.5~55kW] | 100~475HP [75~355kW] |
| | Factory Setting | 8kHz | 6kHz | 4kHz |

| | | 575V | 690V |
|---|---|---|---|
| Settings | | 2~9kHz | 2~09kHz |
| Light Duty | Models | 2~20HP [1.5~15kW] | 25~745 [18.5~560kW] |
| | Factory Setting | 4kHz | 4kHz*1 |
| Normal Duty | Models | 2~20HP [1.5~15kW] | 25~745 [18.5~560kW] |
| | Factory Setting | 4kHz | 4kHz*1 |

| Carrier Frequency | Acoustic Noise | Electromagnetic Noise or Leakage Current | Heat Dissipation | Current Wave |
|---|---|---|---|---|
| 1kHz | Significant | Minimal | Minimal | |
| 8kHz | | | | |
| 15kHz | Minimal | Significant | Significant | |

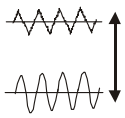

📖 From the table, we see that the PWM carrier frequency has a significant influence on the electromagnetic noise, AC motor drive heat dissipation, and motor acoustic noise. Therefore, if the surrounding noise is greater than the motor noise, lower the carrier frequency is good to reduce the temperature rise. Although it is quiet operation in the higher carrier frequency, the entire wiring and interference resistance should be considerate.

📖 When the carrier frequency is higher than the factory setting, it needs to protect by decreasing the carrier frequency. See Pr.06-55 for the related setting and details.

## 00-19 PLC Command Mask (SOOC, SOOF, SOTC)

Factory Setting: Read Only

Settings bit 0: Control command by PLC force control
bit 1: Frequency command by PLC force control

📖 This parameter determines if frequency command or control command is occupied by PLC

## 00-20 Source of the Master Frequency Command（AUTO）

Factory Setting: 0

Settings 0: Digital keypad
1: RS-485 serial communication
2: External analog input (Pr.03-00)
3: External UP/DOWN terminal
6: CANopen communication card
8: Communication card (no CANopen card)

📖 It is used to set the source of the master frequency in AUTO mode.

📖 Pr.00-20 and 00-21 are for the settings of frequency source and operation source in AUTO mode. Pr.00-30 and 00-31 are for the settings of frequency source and operation source in HAND mode. The AUTO/HAND mode can be switched by the keypad KPC-CC02 or multi-function input terminal (MI).

📖 The factory setting of frequency source or operation source is for AUTO mode. It will return to AUTO mode whenever power on again after power off. If there is multi-function input terminal used to switch AUTO/HAND mode. The highest priority is the multi-function input terminal. When the external terminal is OFF, the drive won't receive any operation signal and can't execute JOG.

## 00-21 Source of the Operation Command （AUTO）

Factory Setting: 0

Settings 0: Digital keypad
1: External terminals. Keypad STOP disabled.
2: RS-485 serial communication. Keypad STOP disabled.
3: CANopen card
5: Communication card (not includes CANopen card)

- It is used to set the source of the operation frequency in AUTO mode.
- When the operation command is controlled by the keypad KPC-CC02, keys RUN, STOP and JOG (F1) are valid.

## 00-22 Stop Method

Factory Setting: 0

Settings 0: Ramp to stop
1: Coast to stop

- The parameter determines how the motor is stopped when the AC motor drive receives a valid stop command.

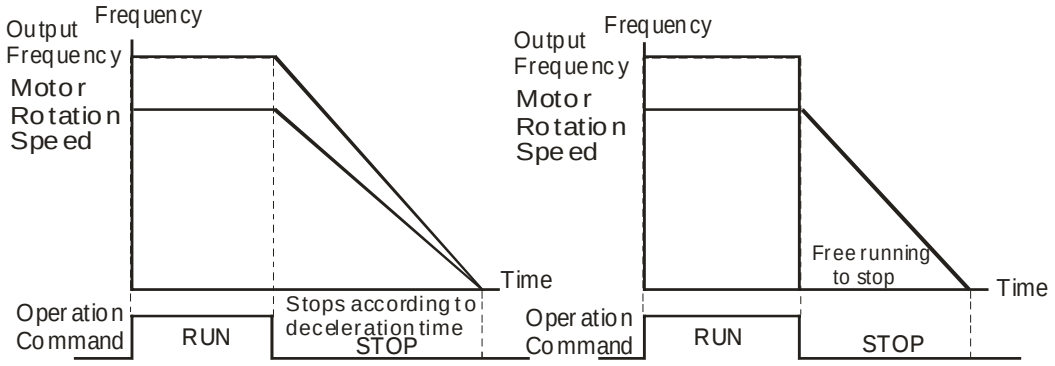


Ramp to Stop and Coast to Stop

- **Ramp to stop:** the AC motor drive decelerates from the setting of deceleration time to 0 or minimum output frequency (Pr. 01-09) and then stop (by Pr.01-07).
- **Coast to stop:** the AC motor drive stops the output instantly upon a STOP command and the motor free runs until it comes to a complete standstill.

  (1) It is recommended to use “ramp to stop” for safety of personnel or to prevent material from being wasted in applications where the motor has to stop after the drive is stopped. The deceleration time has to be set accordingly.

  (2) If the motor free running is allowed or the load inertia is large, it is recommended to select “coast to stop”. For example, blowers, punching machines and pumps

## 00-23 Control of Motor Direction

Factory Setting: 0

Settings 0: Enable forward/ reverse
1: Disable reverse
2: Disable forward

This parameter enables the AC motor drives to run in the forward/reverse Direction. It may be used to prevent a motor from running in a direction that would consequently injure the user or damage the equipment.

## 00-24 Memory of Digital Operator (Keypad) Frequency Command

Factory Setting: Read Only

Settings Read only

If keypad is the source of frequency command, when Lv or Fault occurs the present frequency command will be saved in this parameter.

## 00-25 User Defined Characteristics

Factory Setting: 0

Settings bit 4~15: user defined unit

000xh: Hz
001xh: rpm
002xh: %
003xh: kg
004xh: m/s
005xh: kW
006xh: HP
007xh: ppm
008xh: 1/m
009xh: kg/s
00Axh: kg/m
00Bxh: kg/h
00Cxh: lb/s
00Dxh: lb/m
00Exh: lb/h
00Fxh: ft/s
010xh: ft/m
011xh: m
012xh: ft
013xh: degC
014xh: degF
015xh: mbar
016xh: bar
017xh: Pa

019xh: mWG
01Axh: inWG
01Bxh: ftWG
01Cxh: psi
01Dxh: atm
01Exh: L/s
01Fxh: L/m
020xh: L/h
021xh: m3/s
022xh: m3/h
023xh: GPM
024xh: CFM

- bit 0~3: Control F page, unit of user defined value (Pr00-04 =d10, PID feedback) and the decimal point of Pr00-26 which supports up to 3 decimal points.
- bit 4~15: Control F page, unit of user defined value (Pr00-04=d10, PID feedback) and the display units of Pr00-26.

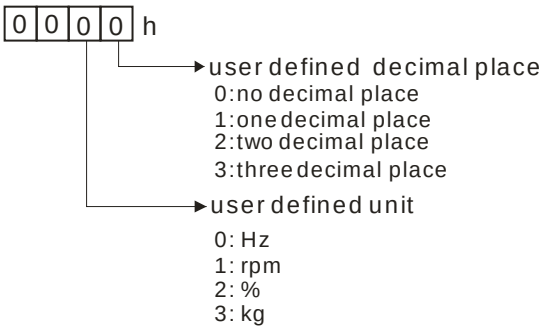


## 00-26 Max. User Defined Value

Factory Setting: 0

Settings 0: Disable
0~65535 (when Pr.00-25 set to no decimal place)
0.0~6553.5 (when Pr.00-25 set to 1 decimal place)
0.00~655.35 (when Pr.00-25 set to 2 decimal place)
0.000~65.535 (when Pr.00-25 set to 3 decimal place)

- When Pr.00-26 is NOT set to 0. The user defined value is enabled. The value of this parameter should correspond to the frequency setting at Pr.01-00.

  Example:

  When the frequency at Pr. 01-00=60.00Hz, the max. user defined value at Pr. 00-26 is 100.0%. That also means Pr.00-25 is set at 0021h to select % as the unit.

**NOTE**

The drive will display as Pr.00-25 setting when Pr.00-25 is properly set and Pr.00-26 is not 0.

## 00-27 User Defined Value

Factory Setting: Read only

Settings Read only

📖 Pr.00-27 will show user defined value when Pr.00-26 is not set to 0.

## 00-28 Switching from Auto mode to Hand mode

Factory Setting: 0

Settings bit0: Sleep Function Control Bit

0: Sleep Function Control Bit

1: Sleep function and Auto mode are the same

bit1: Unit of the Control Bit

0: Displaying Unit in Hz

1: Same unit as the Auto mode

bit2: PID Control Bit

0: Cancel PID control

1: PID control and Auto mode are the same.

bit3: Frequency Source Control Bit

0: Frequency command set by parameter, if the multi-step speed is activated, then multi-step speed has the priority.

1: Frequency command set by Pr00-30, regardless if the multi-speed is activated.

## 00-29 LOCAL/REMOTE Selection

Factory Setting: 0

Settings 0: Standard HOA function

1: Switching Local/Remote, the drive stops

2: Switching Local/Remote, the drive runs as the REMOTE setting for frequency and operation status

3: Switching Local/Remote, the drive runs as the LOCAL setting for frequency and operation status

4: Switching Local/Remote, the drive runs as LOCAL setting when switch to Local and runs as REMOTE setting when switch to Remote for frequency and operation status.

📖 The factory setting of Pr.00-29 is 0 (standard Hand-Off-Auto function). The AUTO frequency and source of operation can be set by Pr.00-20 and Pr.00-21, and the HAND frequency and source of operation can be set by Pr.00-30 and Pr.00-31. AUTO/HAND mode can be selected or switched by using digital keypad (KPC-CC02) or setting multi-function input terminal MI= 41, 42.

📖 When external terminal MI is set to 41 and 42 (AUTO/HAND mode), the settings Pr.00-29=1,2,3,4 will be disabled. The external terminal has the highest priority among all command, Pr.00-29 will always function as Pr.00-29=0, standard HOA mode.

📖 When Pr.00-29 is not set to 0, Local/Remote function is enabled, the top right corner of digital keypad (KPC-CC02) will display “LOC” or “REM”. The LOCAL frequency and source of operation

can be set by Pr.00-20 and Pr.00-21, and the REMOTE frequency and source of operation can be set by Pr.00-30 and Pr.00-31. Local/Remote function can be selected or switched by using digital keypad (KPC-CC02) or setting external terminal MI=56. The AUTO key of the digital keypad now controls for the REMOTE function and HAND key now controls for the LOCAL function.

- When MI is set to 56 for LOC/REM selection, if Pr.00-29 is set to 0, then the external terminal is disabled.
- When MI is set to 56 for LOC/REM selection, if Pr.00-29 is not set to 0, the external terminal has the highest priority of command and the ATUO/HAND keys will be disabled.

## 00-30 Source of the Master Frequency Command（HAND）

Factory Setting: 0

Settings
0: Digital keypad
1: RS-485 serial communication
2: External analog input (Pr.03-00)
3: External UP/DOWN terminal
6: CANopen communication card
8: Communication card (no CANopen card)

- It is used to set the source of the master frequency in HAND mode.

## 00-31 Source of the Operation Command (HAND)

Factory Setting: 0

Settings
0: Digital keypad
1: External terminals. Keypad STOP disabled.
2: RS-485 serial communication. Keypad STOP disabled.
3: CANopen communication card
5: Communication card (not include CANopen card

- It is used to set the source of the operation frequency in HAND mode.
- Pr.00-20 and 00-21 are for the settings of frequency source and operation source in AUTO mode. Pr.00-30 and 00-31 are for the settings of frequency source and operation source in HAND mode. The AUTO/HAND mode can be switched by the keypad KPC-CC02 or multi-function input terminal (MI).
- The factory setting of frequency source or operation source is for AUTO mode. It will return to AUTO mode whenever power on again after power off. If there is multi-function input terminal used to switch AUTO/HAND mode. The highest priority is the multi-function input terminal. When the external terminal is OFF, the drive won't receive any operation signal and can't execute JOG.

## 00-32 Digital Keypad STOP Function

Factory Setting: 0

Settings
0: STOP key disable
1: STOP key enable

- This parameter works when the source of operation command is not digital keypad (Pr00-21≠0). When Pr00-21=0, the stop key will not follow the setting of this parameter.

## 00-48 Display Filter Time (Current)

Factory Settings: 0.100

Settings: 0.001~65.535 sec

Set this parameter to minimize the current fluctuation displayed by digital keypad.

## 00-49 Display Filter Time (Keypad)

Factory Settings: 0.100

Settings: 0.001~65.535 sec

Set this parameter to minimize the display value fluctuation displayed by digital keypad.

## 00-50 Software Version (date)

Factory Settings: Read only

Settings: Read only

This parameter displays the drive's software version by date.

# 01 Basic Parameters

✓ This parameter can be set during operation.

| 01-00 | Maximum Output Frequency |
|---|---|

Factory Setting: 60.00/50.00

Settings 50.00~599.00Hz
Setting Range for /including 45kW(60HP) and above: 0.00~400.00Hz

📖 This parameter determines the AC motor drive's Maximum Output Frequency. All the AC motor drive frequency command sources (analog inputs 0 to +10V, 4 to 20mA, 0 to 20mA) are scaled to correspond to the output frequency range.

Setting Range for /including 45kW(60HP) and above: 0.00~400.00Hz

| Minimum Carrier Wave Requirement | Maximum Output Frequency (IM VF/ IM SVC) |
|---|---|
| 2k | 200 Hz |
| 3k | 300 Hz |
| 4k | 400 Hz |
| 5k | 500 Hz |
| 6k | 600 Hz |
| 230V series 55kW and above, maximum output frequency is 400Hz (carrier should be set at least 4k)<br>460V series 90kW and above, maximum output frequency is 400Hz (carrier should be set at least 4k) | |

| 01-01 | Maximum Output Frequency of Motor 1 (base frequency and motor rated frequency) |
|---|---|
| 01-35 | Output Frequency of Motor 2（base frequency and motor rated frequency） |

Factory Setting: 60.00/50.00

Settings 0.00~599.00Hz

📖 This value should be set according to the rated frequency of the motor as indicated on the motor nameplate. If the motor is 60Hz, the setting should be 60Hz. If the motor is 50Hz, it should be set to 50Hz.

| 01-02 | Maximum Output Voltage of Motor 1 (base frequency and motor rated frequency) |
|---|---|
| 01-36 | Output Voltage of Motor 2（base frequency and motor rated frequency） |

Factory Setting: 200.0/400.0/575.0/660.0

Settings 230V series: 0.0V~255.0V
460V series: 0.0V~510.0V
575V series: 0.0V~637.0V
690V series: 0.0V~765.0V

📖 This value should be set according to the rated voltage of the motor as indicated on the motor nameplate. If the motor is 220V, the setting should be 220.0. If the motor is 200V, it should be set to 200.0.

📖 There are many motor types in the market and the power system for each country is also difference. The economic and convenience method to solve this problem is to install the AC motor drive. There is no problem to use with the different voltage and frequency and also can amplify the original characteristic and life of the motor.

| 01-03 | Mid-point Frequency 1 of Motor 1 |
|---|---|

Factory Setting: 3.00/3.00/0.0/0.0

Settings 230V series: 0.00~599.00Hz
460V series: 0.00~599.00Hz
575V series: 0.00~599.00Hz
690V series: 0.00~599.00Hz

| 01-04 | Mid-point Voltage 1 of Motor 1 |
|---|---|

Factory Setting: 11.0/22.0/0.0/0.0

Settings 230V series: 0.0V~240.0V
460V series: 0.0V~480.0V
575V series: 0.0V~637.0V
690V series: 0.0V~720.0V
690V, 185kW and above series: 10.0

| 01-37 | Mid-point Frequency 1 of Motor 2 |
|---|---|

Factory Setting: 3.00

Settings 0.00~599.00Hz

| 01-38 | Mid-point Voltage 1 of Motor 2 |
|---|---|

Factory Setting: 11.0/22.0/0.0/0.0

Settings 230V series: 0.0V~240.0V
460V series: 0.0V~480.0V
575V series: 0.0V~637.0V
690V series: 0.0V~720.0V
690V, 185kW and above series: 10.0

| 01-05 | Mid-point Frequency 2 of Motor 1 |
|---|---|

Factory Setting: 1.50

Settings 0.00~599.00Hz

| 01-06 | Mid-point Voltage 2 of Motor 1 |
|---|---|

Factory Setting: 5.0/10.0/0.0/0.0

Settings 230V series: 0.0V~240.0V
460V series: 0.0V~480.0V
575V series: 0.0V~637.0V
690V series: 0.0V~720.0V
690V, 185kW and above series: 2.0

| 01-39 | Mid-point Frequency 2 of Motor 2 |
|---|---|

Factory Setting: 1.50

Settings 0.00~599.00Hz

| 01-40 | Mid-point Voltage 2 of Motor 2 | |
|---|---|---|
| | | Factory Setting: 5.0/10.0/ 0.0/0.0 |
| | Settings 230V series: 0.0V~240.0V<br>460V series: 0.0V~480.0V<br>575V series: 0.0V~637.0V<br>690V series: 0.0V~720.0V | |
| | | 690V, 185kW and above series: 2.0 |

| 01-07 | Min. Output Frequency of Motor 1 | |
|---|---|---|
| | | Factory Setting: 0.50 |
| | Settings 0.00~599.00Hz | |

| 01-08 | Min. Output Voltage of Motor 1 | |
|---|---|---|
| | | Factory Setting: 1.0/2.0/ 0.0/0.0 |
| | Settings 230V series: 0.0V~240.0V<br>460V series: 0.0V~480.0V<br>575V series: 0.0V~637.0V<br>690V series: 0.0V~720.0V | |

| 01-41 | Min. Output Frequency of Motor 2 | |
|---|---|---|
| | | Factory Setting: 0.50 |
| | Settings 0.00~599.00Hz | |

| 01-42 | Min. Output Voltage of Motor 2 | |
|---|---|---|
| | | Factory Setting: 1.0/2.0/ 0.0/0.0 |
| | Settings 230V series: 0.0V~240.0V<br>460V series: 0.0V~480.0V<br>575V series: 0.0V~637.0V<br>690V series: 0.0V~720.0V | |

- V/F curve setting is usually set by the motor's allowable loading characteristics. Pay special attention to the motor's heat dissipation, dynamic balance, and bearing lubricity, if the loading characteristics exceed the loading limit of the motor.
- There is no limit for the voltage setting, but a high voltage at low frequency may cause motor damage, overheat, and stall prevention or over-current protection. Therefore, please use the low voltage at the low frequency to prevent motor damage.
- Pr.01-35 to Pr.01-42 is the V/F curve for the motor 2. When multi-function input terminals Pr.02-01~02-08 and Pr.02-26 ~Pr.02-31 are set to 14 and enabled, the AC motor drive will act as the 2$^{nd}$ V/F curve.
- The V/F curve for the motor 1 is shown as follows. The V/f curve for the motor 2 can be deduced from it.

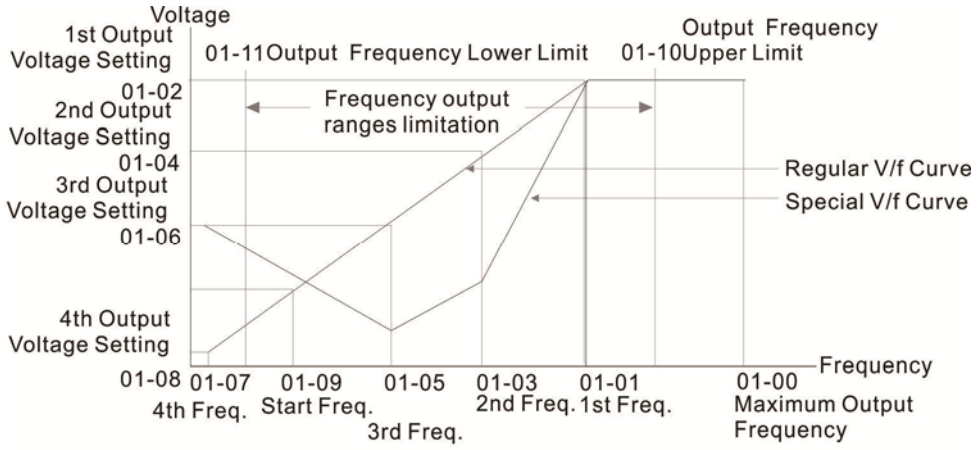


V/F Curve

Common settings of V/F curve:

(1) General purpose

**Motor spec. 60Hz**

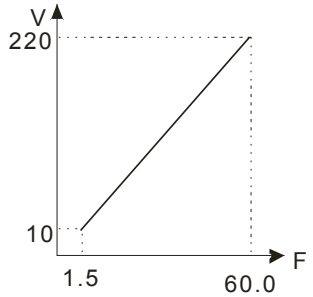


| Pr. | Setting |
|---|---|
| 01-00 | 60.0 |
| 01-01 | 60.0 |
| 01-02 | 220.0 |
| 01-03<br>01-05 | 1.50 |
| 01-04<br>01-06 | 10.0 |
| 01-07 | 1.50 |
| 01-08 | 10.0 |

**Motor spec. 50Hz**

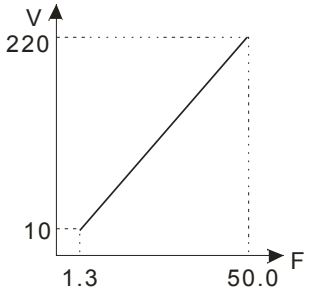


| Pr. | Setting |
|---|---|
| 01-00 | 50.0 |
| 01-01 | 50.0 |
| 01-02 | 220.0 |
| 01-03<br>01-05 | 1.30 |
| 01-04<br>01-06 | 10.0 |
| 01-07 | 1.30 |
| 01-08 | 10.0 |

(2) Fan and hydraulic machinery

**Motor spec. 60Hz**

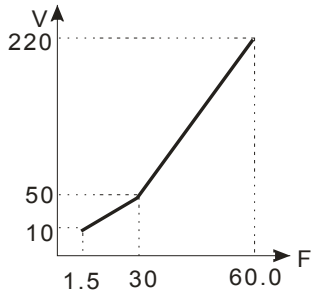


| Pr. | Setting |
|---|---|
| 01-00 | 60.0 |
| 01-01 | 60.0 |
| 01-02 | 220.0 |
| 01-03<br>01-05 | 30.0 |
| 01-04<br>01-06 | 50.0 |
| 01-07 | 1.50 |
| 01-08 | 10.0 |

**Motor spec. 50Hz**

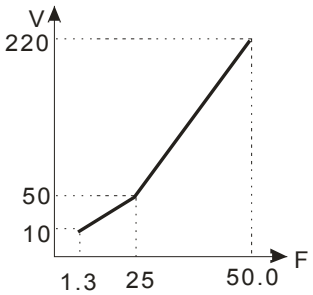


| Pr. | Setting |
|---|---|
| 01-00 | 50.0 |
| 01-01 | 50.0 |
| 01-02 | 220.0 |
| 01-03<br>01-05 | 25.0 |
| 01-04<br>01-06 | 50.0 |
| 01-07 | 1.30 |
| 01-08 | 10.0 |

(3) High starting torque

**Motor spec. 60Hz**

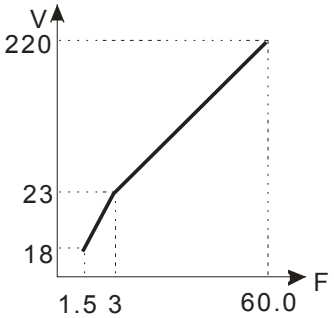


| Pr. | Setting |
|---|---|
| 01-00 | 60.0 |
| 01-01 | 60.0 |
| 01-02 | 220.0 |
| 01-03<br>01-05 | 3.00 |
| 01-04<br>01-06 | 23.0 |
| 01-07 | 1.50 |
| 01-08 | 18.0 |

**Motor spec. 50Hz**

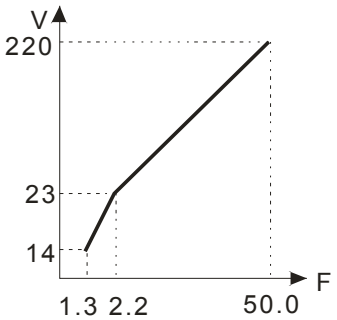


| Pr. | Setting |
|---|---|
| 01-00 | 50.0 |
| 01-01 | 50.0 |
| 01-02 | 220.0 |
| 01-03<br>01-05 | 2.20 |
| 01-04<br>01-06 | 23.0 |
| 01-07 | 1.30 |
| 01-08 | 14.0 |

## 01-09 Start-Up Frequency

Factory Setting: 0.50

Settings 0.00~599.00Hz

When start frequency is higher than the min. output frequency, drives' output will be from start frequency to the setting frequency. Please refer to the following diagram for details.

Fcmd=frequency command,

Fstart=start frequency (Pr.01-09),

fstart=actual start frequency of drive,

Fmin=4th output frequency setting (Pr.01-07/Pr.01-41),

Flow=output frequency lower limit (Pr.01-11)

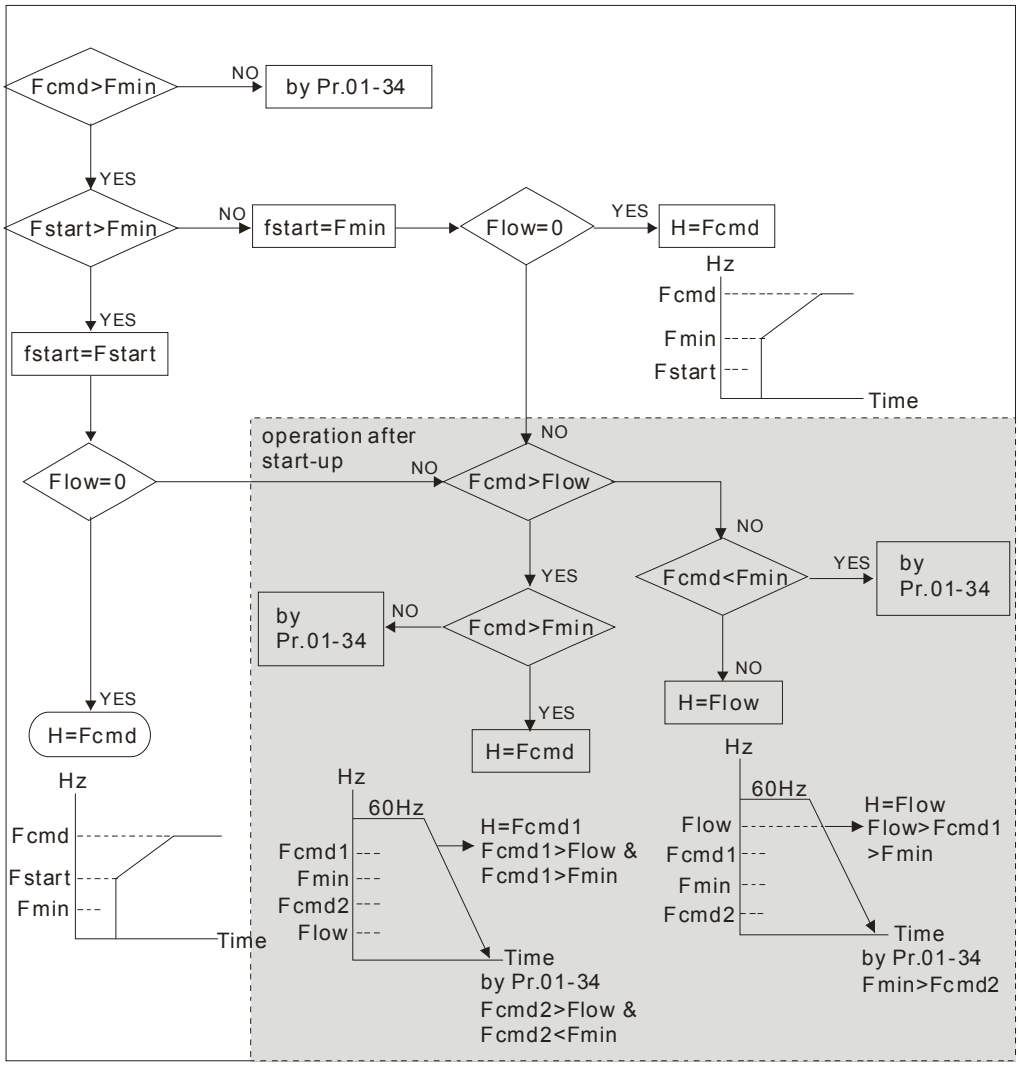


Fcmd>Fmin and Fcmd<Fstart:

If Flow<Fcmd， drive will run with Fcmd directly.

If Flow>=Fcmd, drive will run with Fcmd firstly, then, accelerate to Flow according to acceleration time.

The drive's output will stop immediately when output frequency has reach to Fmin during deceleration.

## 01-10 Output Frequency Upper Limit

Factory Setting: 599.00

Settings 0.00~599.00Hz

## 01-11 Output Frequency Lower Limit

Factory Setting: 0.00

Settings 0.00~599.00Hz

- The upper/lower output frequency setting is used to limit the actual output frequency. If the frequency setting is higher than the upper limit (01-10), it will run with the upper limit frequency. If output frequency lower than output frequency lower limit (01-11) and frequency setting is higher than min. frequency (01-07), it will run with lower limit frequency. The upper limit frequency should be set to be higher than the lower limit frequency. Pr.01-10 setting must be ≥ Pr.01-11 setting.
- Upper output frequency will limit the max. Output frequency of drive. If frequency setting is higher than Pr.01-10, the output frequency will be limited by Pr.01-10 setting.
- When the drive starts the function of slip compensation (Pr.07-27) or PID feedback control, drive output frequency may exceed frequency command but still be limited by this setting.
- Related parameters: Pr.01-00 Max. Operation Frequency and Pr.01-11 Output Frequency Lower Limit

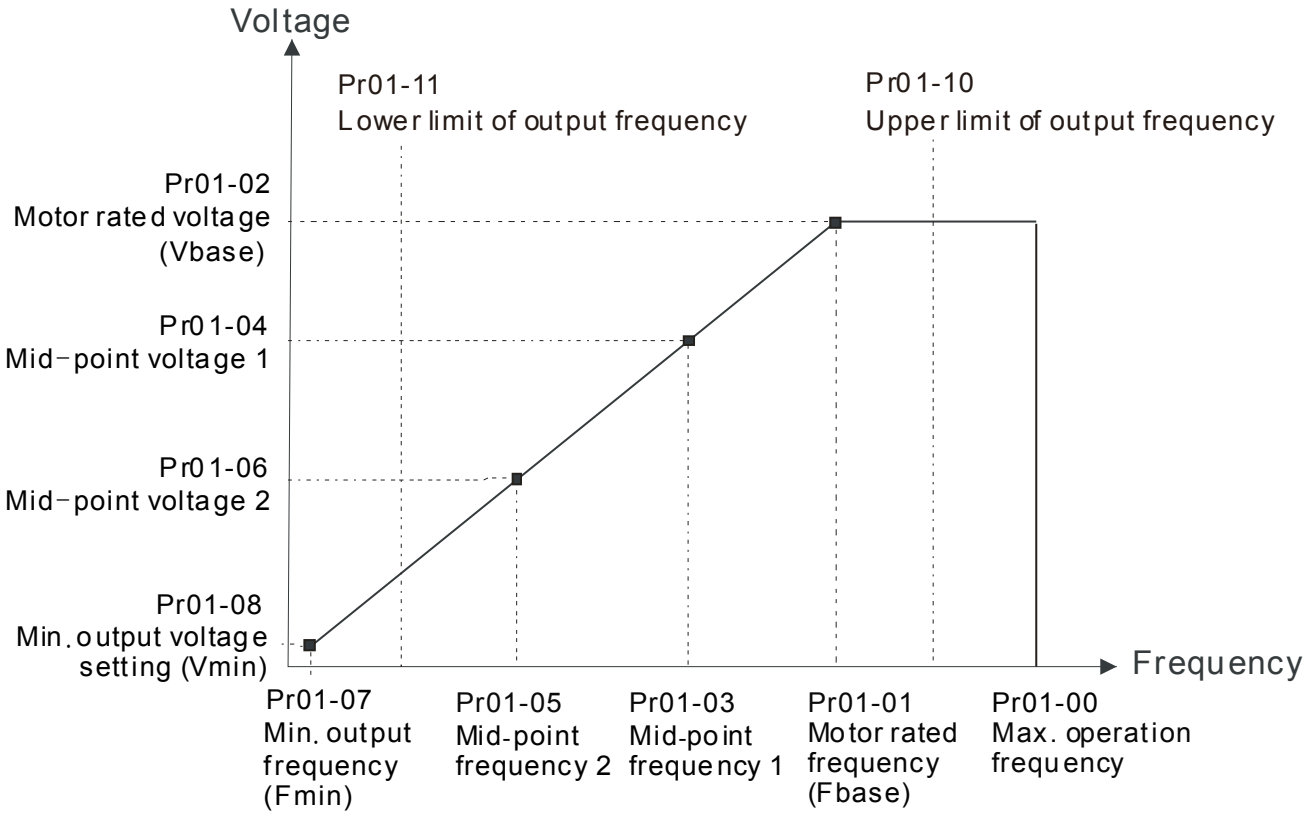


- Lower output frequency will limit the min. output frequency of drive. When drive frequency command or feedback control frequency is lower than this setting, drive output frequency will limit by the lower limit of frequency.
- When the drive starts, it will operate from min. output frequency (Pr.01-07) and accelerate to the setting frequency. It won't limit by lower output frequency setting.
- The setting of output frequency upper/lower limit is used to prevent personal miss-operation, overheat due to too low operation frequency or damage due to too high speed.
- If the output frequency upper limit setting is 50Hz and frequency setting is 60Hz, max. output frequency will be 50Hz.

- If the output frequency lower limit setting is 10Hz and min. operation frequency setting (Pr.01-07) is 1.5Hz, it will operate by 10Hz when the frequency command is greater than Pr.01-07 and less than 10Hz. If the frequency command is less than Pr.01-07, the drive will be in ready status and no output.
- If the frequency output upper limit is 60Hz and frequency setting is also 60Hz, only frequency command will be limit in 60Hz. Actual frequency output may exceed 60Hz after slip compensation.

| | | |
|---|---|---|
| ✓ | 01-12 | Accel. Time 1 |
| ✓ | 01-13 | Decel. Time 1 |
| ✓ | 01-14 | Accel. Time 2 |
| ✓ | 01-15 | Decel. Time 2 |
| ✓ | 01-16 | Accel. Time 3 |
| ✓ | 01-17 | Decel. Time 3 |
| ✓ | 01-18 | Accel. Time 4 |
| ✓ | 01-19 | Decel. Time 4 |
| ✓ | 01-20 | JOG Acceleration Time |
| ✓ | 01-21 | JOG Deceleration Time |

Factory Setting: 10.00/10.0

Settings Pr.01-45=0: 0.00~600.00 seconds

Pr.01-45=1: 0.00~6000.00 seconds

230V/460V/690V · 22kW and above series: 60.00 / 60.0

690V · 160kW and above series: 80.00 / 80.0

- The Acceleration Time is used to determine the time required for the AC motor drive to ramp from 0Hz to Maximum Output Frequency (Pr.01-00).
- The Deceleration Time is used to determine the time require for the AC motor drive to decelerate from the Maximum Output Frequency (Pr.01-00) down to 0Hz.
- The Acceleration/Deceleration Time is invalid when using Pr.01-44 Optimal Acceleration/ Deceleration Setting.
- The Acceleration/Deceleration Time 1, 2, 3, 4 are selected according to the Multi-function Input Terminals settings. The factory settings are Accel./Decel. time 1.
- When enabling torque limits and stalls prevention function, actual accel./decel. time will be longer than the above action time.
- Please note that it may trigger the protection function (Pr.06-03 Over-current Stall Prevention during Acceleration or Pr.06-01 Over-voltage Stall Prevention) when setting of accel./decel. time is too short.
- Please note that it may cause motor damage or drive protection enabled due to over current during acceleration when the setting of acceleration time is too short.
- Please note that it may cause motor damage or drive protection enabled due to over current during deceleration or over-voltage when the setting of deceleration time is too short.
- It can use suitable brake resistor (see Chapter 06 Accessories) to decelerate in a short time and prevent over-voltage.

When enabling Pr.01-24~Pr.01-27, the actual accel./decel. time will be longer than the setting.

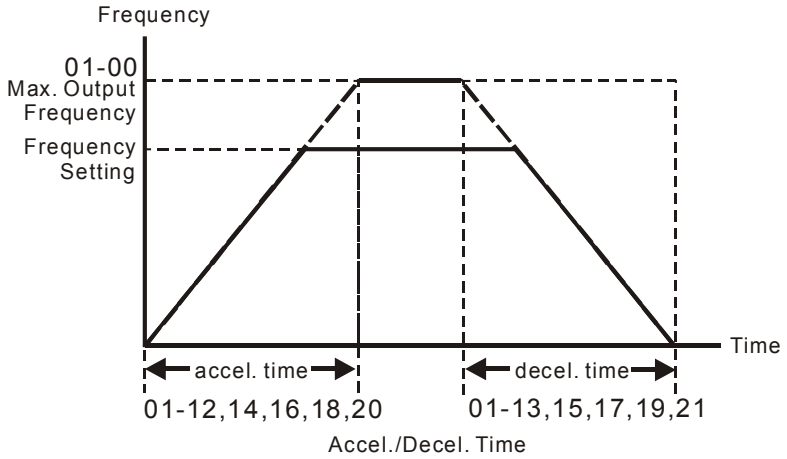


## 01-22 JOG Frequency

Factory Setting: 6.00

Settings 0.00~599.00Hz

Both external terminal JOG and key "F1" on the keypad KPC-CC01 can be used. When the jog command is ON, the AC motor drive will accelerate from 0Hz to jog frequency (Pr.01-22). When the jog command is OFF, the AC motor drive will decelerate from Jog Frequency to zero. The Jog Accel./Decel. time (Pr.01-20, Pr.01-21) is the time that accelerates from 0.0Hz to Pr.01-22 JOG Frequency.

The JOG command can't be executed when the AC motor drive is running. In the same way, when the JOG command is executing, other operation commands are invalid.

It does not support JOG function in the optional keypad KPC-CC02.

## 01-23 1st/4th Accel./decel. Frequency

Factory Setting: 0.00

Settings 0.00~599.00Hz

The transition from acceleration/deceleration time 1 to acceleration/deceleration time 4, may also be enabled by the external terminals. The external terminal has priority over Pr. 01-23.

When using this function, please set S-curve acceleration time as 0 if 4th acceleration time is set too short.

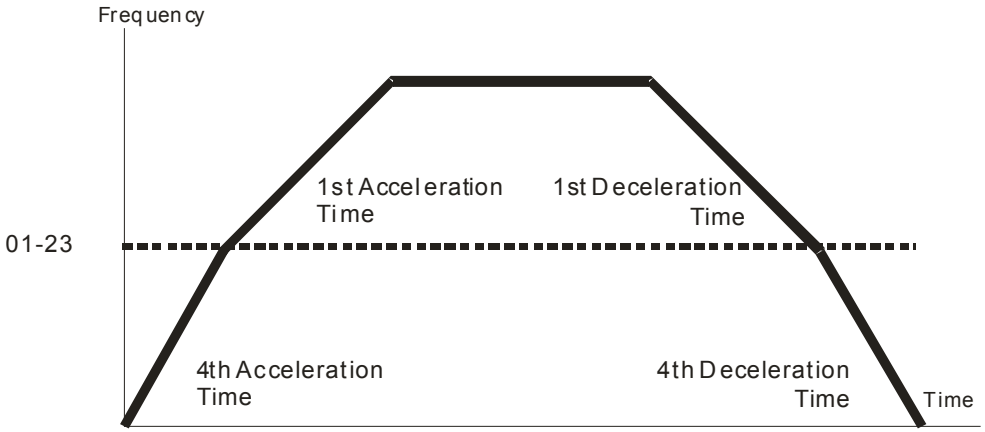


1st/4th Acceleration/Deceleration Frequency Switching

| | |
|---|---|
| 01-24 | S-curve Acceleration Begin Time 1 |
| 01-25 | S-curve Acceleration Arrival Time 2 |
| 01-26 | S-curve Deceleration Begin Time 1 |
| 01-27 | S-curve Deceleration Arrival Time 2 |

Factory Setting: 0.20/0.2

Settings Pr.01-45=0: 0.00~25.00 seconds
Pr.01-45=1: 0.00~250.0 seconds

- It is used to give the smoothest transition between speed changes. The accel./decel. curve can adjust the S-curve of the accel./decel. When it is enabled, the drive will have different accel./decel. curve by the accel./decel. time.
- The S-curve function is disabled when accel./decel. time is set to 0.
- When Pr.01-12, 01-14, 01-16, 01-18 ≥ Pr.01-24 and Pr.01-25,
  The Actual Accel. Time = Pr.01-12, 01-14, 01-16, 01-18 + (Pr.01-24 + Pr.01-25)/2
- When Pr.01-13, 01-15, 01-17, 01-19 ≥ Pr.01-26 and Pr.01-27,
  The Actual Decel. Time = Pr.01-13, 01-15, 01-17, 01-19 + (Pr.01-26 + Pr.01-27)/2

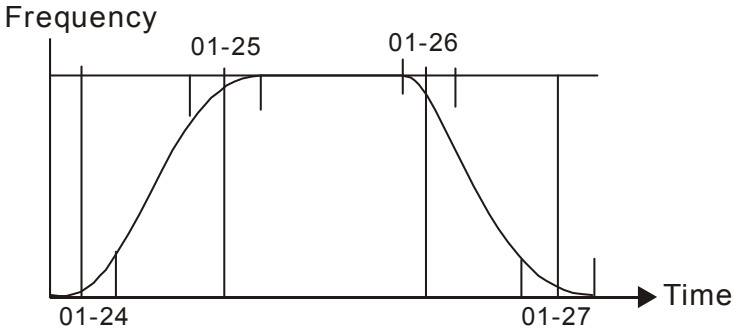


| | |
|---|---|
| 01-28 | Skip Frequency 1 (upper limit) |
| 01-29 | Skip Frequency 1 (lower limit) |
| 01-30 | Skip Frequency 2 (upper limit) |
| 01-31 | Skip Frequency 2 (lower limit) |
| 01-32 | Skip Frequency 3 (upper limit) |
| 01-33 | Skip Frequency 3 (lower limit) |

Factory Setting: 0.00

Settings 0.00~599.00Hz

- These parameters are used to set the skip frequency of the AC drive. But the frequency output is continuous. There is no limit for the setting of these six parameters and can be used as required.
- The skip frequencies are useful when a motor has vibration at a specific frequency bandwidth. By skipping this frequency, the vibration will be avoided. It offers 3 zones for use.
- These parameters are used to set the skip frequency of the AC drive. But the frequency output is continuous. The limit of these six parameters is 01-28≥01-29≥01-30≥01-31≥01-32≥01-33. This function will be invalid when setting to 0.0.
- The setting of frequency command (F) can be set within the range of skip frequencies. In this moment, the output frequency (H) will be limited by these settings.
- When accelerating/decelerating, the output frequency will still pass the range of skip frequencies.

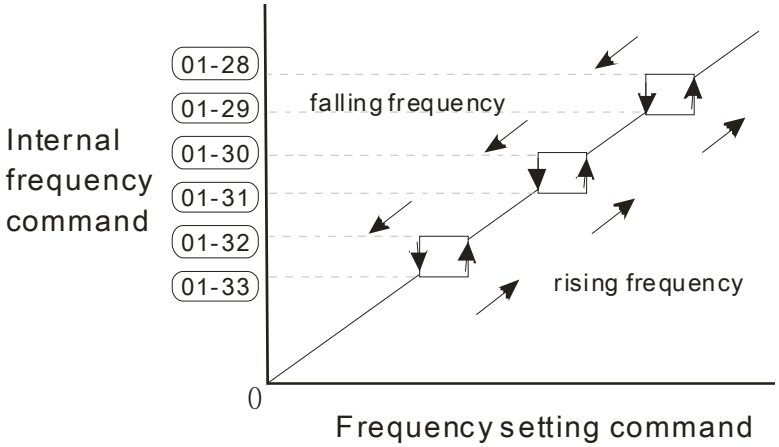


## 01-34 Zero-speed Mode

Factory Setting: 0

Settings 0: Output waiting
1: Zero-speed operation
2: Fmin (Refer to Pr.01-07, 01-41)

- When the frequency is less than Fmin (Pr.01-07 or Pr.01-41), it will operate by this parameter.
- When it is set to 0, the AC motor drive will be in waiting mode without voltage output from terminals U/V/W.
- When setting 1, it will execute DC brake by Vmin(Pr.01-08 and Pr.01-42) in V/F, and SVC modes.
- When it is set to 2, the AC motor drive will run by Fmin (Pr.01-07, Pr.01-41) and Vmin (Pr.01-08, Pr.01-42) in V/F, SVC modes.
- In V/F, SVC modes

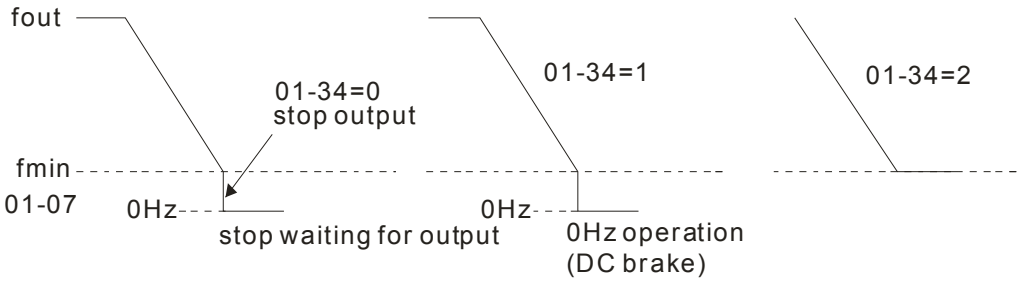


- In FOCPG mode, when Pr.01-34 is set to 2, it will act according Pr.01-34 setting.

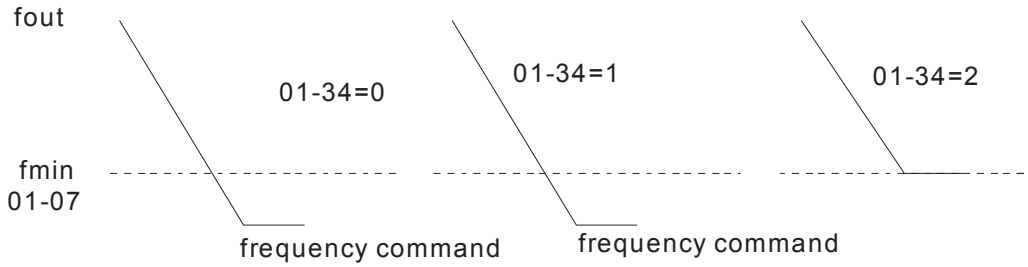


## 01-43 V/F Curve Selection

Factory Setting: 0

Settings 0~15

- V/F curve can be selected from 15 kinds of default settings or set manually.
- Different kinds of V/F curves are shown in the table below. There are 15 kinds of V/F curve to be

chosen. Choose a V/F curve suitable for your application then set Pr01-43 by following the V/F curve chosen. The set values of Pr01-00 ~Pr01-08 can be verified and fine-tuned.

**NOTE**

1. If the V/F curve is not selected properly, it may result motor to generate insufficient torque or may lead to high current output due to over fluxing.
2. When the motor drive is reset by Pr00-02, Pr01-43 is reset as well.

| Setting | SPEC. | Feature | Purpose |
|---|---|---|---|
| 0 | V/F curve determined | Constant torque | For normal application. This required torque for load is the same no matter the rotor speed of motor. |
| 1 | 1.5th V/F curve | Variable torque | curve, the torque in low speed is relatively low, which is not recommended V/F curve to the 2 power for high acceleration/deceleration application. |
| 2 | 2nd V/F curve | | |
| 3 | 60Hz (voltage saturation in 50Hz) | Constant torque | For normal application. This required torque for load is the same no matter the rotor speed of motor. |
| 4 | 72Hz (voltage saturation in 60Hz) | | |
| 5 | 3rd decreasing (50Hz) | Decreasing torque | For fans, pumps, the required torque derating relative to the load. |
| 6 | 2nd decreasing (50Hz) | | |
| 7 | 3rd decreasing (60Hz) | | |
| 8 | 2nd decreasing (60Hz) | | |
| 9 | Mid. Starting torque (50Hz) | High starting torque | Select high starting torque when:<br>■ Wiring between the drive and motor (exceeds 150 m)<br>■ A large amount of starting torque is required (like lift)<br>■ An AC reactor is installed in the output side of the drive |
| 10 | High starting torque (50Hz) | | |
| 11 | Mid. Starting torque (60Hz) | | |
| 12 | High starting torque (60Hz) | | |
| 13 | 90Hz (voltage saturation in 60Hz) | Constant output operation | The curve for operation above 60Hz. To operate above 60Hz, the output voltage is fixed. |
| 14 | 120Hz (voltage saturation in 60Hz) | | |
| 15 | 180Hz (voltage saturation in 60Hz) | | |

📖 When setting to 0, refer to Pr.01-01~01-08 for motor 1 V/f curve. For motor 2, please refer to Pr.01-35~01-42.

📖 When setting to 1 or 2, 2nd and 3rd voltage frequency setting are invalid.

📖 When setting higher power V/f curve, it is lower torque at low frequency and is not suitable for rapid acceleration/deceleration. It is recommended NOT to use this parameter for the rapid acceleration/deceleration.

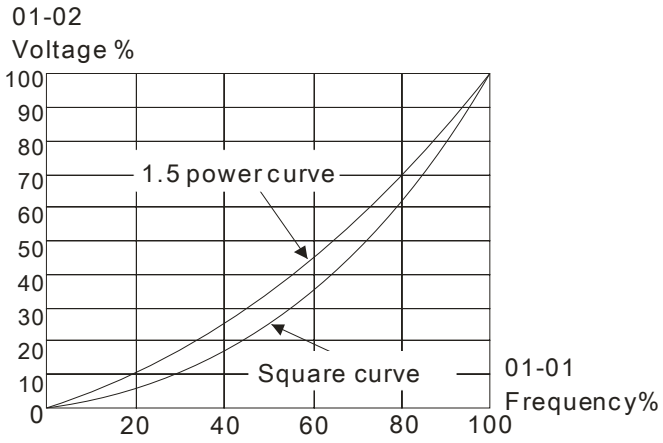


## 01-44 Optimal Acceleration/Deceleration Setting

Factory Setting: 0

Settings 0: Linear accel./decel.
1: Auto accel., linear decel.
2: Linear accel., auto decel.
3: Auto accel./decel. (auto calculate the accel./decel. time by actual load)
4: Stall prevention by auto accel./decel. (limited by 01-12 to 01-21)

- Setting 0 Linear accel./decel.: it will accelerate/decelerate according to the setting of Pr.01-12~01-19.
- Setting to Auto accel./decel.: it can reduce the mechanical vibration and prevent the complicated auto-tuning processes. It won't stall during acceleration and no need to use brake resistor. In addition, it can improve the operation efficiency and save energy.
- Setting 3 Auto accel./decel. (auto calculate the accel./decel. time by actual load): it can auto detect the load torque and accelerate from the fastest acceleration time and smoothest start current to the setting frequency. In the deceleration, it can auto detect the load re-generation and stop the motor smoothly with the fastest decel. time.
- Setting 4 Stall prevention by auto accel./decel. (limited by 01-12 to 01-21): if the acceleration/deceleration is in the reasonable range, it will accelerate/decelerate by Pr.01-12~01-19. If the accel./decel. time is too short, the actual accel./decel. time is greater than the setting of accel./decel. time.

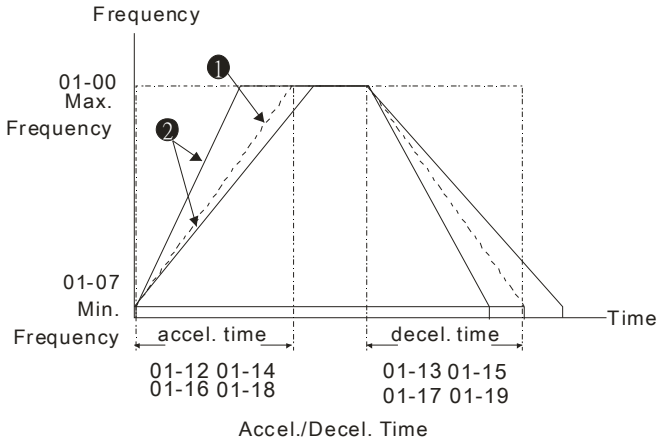


❶ When Pr.01-44 is set to 0.

❷ When Pr.01-44 is set to 3.

## 01-45 Time Unit for Acceleration/Deceleration and S Curve

Factory Setting: 0

Settings 0: Unit 0.01 sec
1: Unit 0.1 sec

## 01-46 Time for CANopen Quick Stop

Factory Setting: 1.00

Settings Pr. 01-45=0: 0.00~600.00 sec
Pr. 01-45=1: 0.0~6000.0 sec

- It is used to set the time that decelerates from the max. operation frequency (Pr.01-00) to 0.00Hz in CANopen control.

## 01-49 Deceleration Method

Factory Setting: 0

Settings 0: Normal decel.
1: Over fluxing decel.
2: Traction energy control

- When Pr01-49=0, the deceleration or stop will according to original deceleration method.
- When Pr01-49=1: drive will control the deceleration time according to the Pr06-01 setting value and DC BUS voltage.
  DC BUS >95% of Pr06-01 Over-voltage Stall Prevention setting value →enable Over fluxing deceleration method.
  If the Pr06-01=0→Drive will enable Over fluxing deceleration method according to the operating voltage and DC BUS regenerative voltage This method will refer to the deceleration time setting and the actual deceleration time will longer than the deceleration time setting.
- Actual deceleration time will longer than the deceleration time setting because the Over-voltage Stall Prevention function.
- When Pr01-49=1, please used with the parameter Pr06-02=1 to get a better over voltage suppression effect during deceleration.
- Pr01-49=2: this function is based on the drives' ability to auto-adjust output frequency and voltage in order to get faster DC BUS energy consumption and the actual deceleration time will be as much as possible consistent with the deceleration parameter set up time. When real deceleration time does not conform to the expected deceleration time and cause an over-voltage errors, recommended that to use this setting.

# 02 Digital Input/Output Parameter

✓ This parameter can be set during operation.

| 02-00 | 2-wire/3-wire Operation Control |
|---|---|

Factory Setting: 0

Settings 0: 2 wire mode 1
1: 2 wire mode 2
2: 3 wire mode

It is used to set the operation control method:

| Pr.02-00 | Control Circuits of the External Terminal |
|---|---|
| 0<br>2-wire mode 1<br>FWD/STOP<br>REV/STOP | 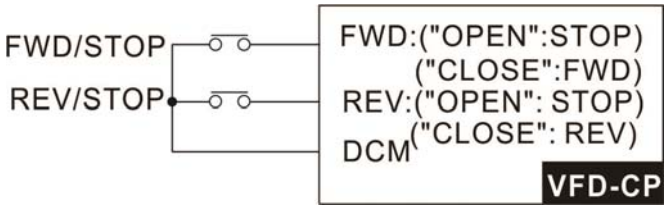 |
| 1<br>2-wire mode 2<br>RUN/STOP<br>REV/FWD | 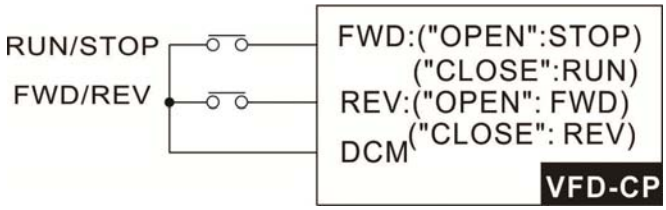 |
| 2<br>3-wire operation control | 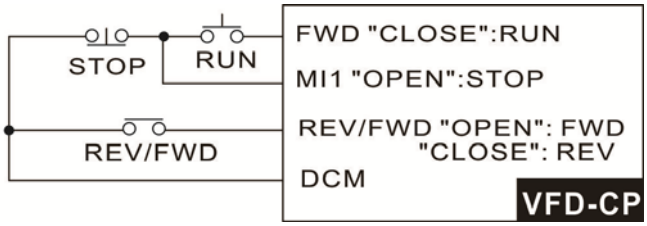 |

| 02-01 | Multi-function Input Command 1 (MI1)<br>(MI1= STOP command when in 3-wire operation control) |
|---|---|

Factory Setting: 1

| 02-02 | Multi-function Input Command 2 (MI2) |
|---|---|

Factory Setting: 2

| 02-03 | Multi-function Input Command 3 (MI3) |
|---|---|

Factory Setting: 3

| 02-04 | Multi-function Input Command 4 (MI4) |
|---|---|

Factory Setting: 4

| | |
|---|---|
| 02-05 | Multi-function Input Command 5 (MI5) |
| 02-06 | Multi-function Input Command 6 (MI6) |
| 02-07 | Multi-function Input Command 7 (MI7) |
| 02-08 | Multi-function Input Command 8 (MI8) |
| 02-26 | Input terminal of I/O extension card (MI10) |
| 02-27 | Input terminal of I/O extension card (MI11) |

| | |
|---|---|
| 02-28 | Input terminal of I/O extension card (MI12) |
| 02-29 | Input terminal of I/O extension card (MI13) |
| 02-30 | Input terminal of I/O extension card (MI14) |
| 02-31 | Input terminal of I/O extension card (MI15) |

Factory Setting: 0

Settings Refer to functions list below

- This parameter selects the functions for each multi-function terminal.
- The terminals of Pr.02-26~Pr.02-29 are virtual and set as MI10~MI13 when using with optional card EMC-D42A. Pr.02-30~02-31 are virtual terminals.
- When being used as a virtual terminal, it needs to change the status (0/1: ON/OFF) of bit 8-15 of Pr.02-12 by digital keypad KPC-CC02 or communication.
- If Pr.02-00 is set to 3-wire operation control. Terminal MI1 is for STOP contact. Therefore, MI1 is not allowed for any other operation.
- Summary of function settings (Take the normally open contact for example, ON: contact is closed, OFF: contact is open)

| Settings | Functions | Descriptions |
|---|---|---|
| 0 | No Function | |
| 1 | Multi-step speed command 1/ multi-step position command 1 | 15 step speeds could be conducted through the digital status of the 4 terminals, and 16 in total if the master speed is included. (Refer to Parameter set 4) |
| 2 | Multi-step speed command 2/ multi-step position command 2 | |
| 3 | Multi-step speed command 3/ multi-step position command 3 | |
| 4 | Multi-step speed command 4/ multi-step position command 4 | |
| 5 | Reset | After the error of the drive is eliminated, use this terminal to reset the drive. |
| 6 | JOG Command | This function is valid when the source of operation command is external terminals.<br>Before executing this function, it needs to wait for the drive stop completely. During running, it can change the operation direction and STOP key on the keypad is valid. Once the external terminal receives OFF command, the motor will stop by the JOG deceleration time. Refer to Pr.01-20~01-22 for details. |

| Settings | Functions | Descriptions |
|---|---|---|
| | | 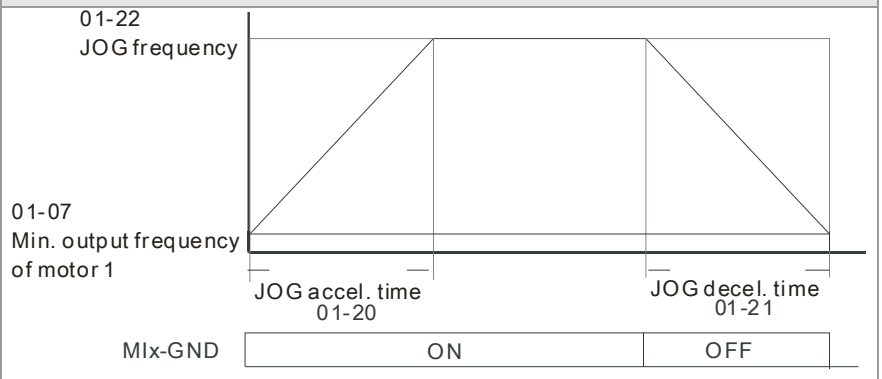 |
| 7 | Acceleration/deceleration Speed Inhibit | When this function is enabled, acceleration and deceleration is stopped. After this function is disabled, the AC motor drive starts to accel./decel. from the inhibit point.<br> 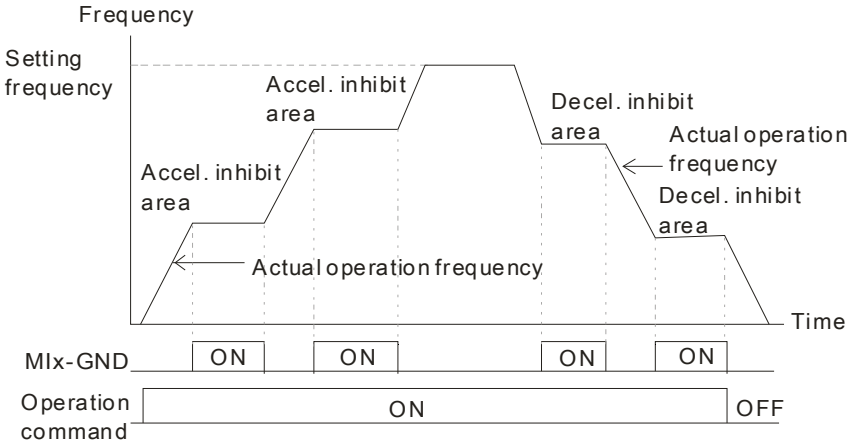 |
| 8 | The 1st, 2nd acceleration or deceleration time selection | The acceleration/deceleration time of the drive could be selected from this function or the digital status of the terminals; there are 4 acceleration/deceleration speeds in total for selection. |
| 9 | The 3rd, 4th acceleration or deceleration time selection | |

| MIx=9 | MIx=8 | Accel./Decel. |
|---|---|---|
| OFF | OFF | 1st Accel./Decel. |
| OFF | ON | 2nd Accel./Decel. |
| ON | OFF | 3rd Accel./Decel. |
| ON | ON | 4th Accel./Decel. |

| | | |
|---|---|---|
| 10 | EF Input<br>(EF: External fault) | For external fault input. Motor drive will decelerate by Pr.07-20 setting and keypad will show EF. (It will have fault record when external fault occurs). Until the causes of fault eliminated, the drive can keep running after resetting. |
| 11 | External B.B. Input<br>(B.B.: Base Block) | When the contact of this function is ON, output of the drive will cut off immediately, and the motor will be free run and keypad will display B.B. signal. Refer to Pr.07-08 for details. |

| Settings | Functions | Descriptions |
|---|---|---|
| 12 | Output Stop<br>(Output pause) | If the contact of this function is ON, output of the drive will cut off immediately, and the motor will then be free run. In addition, once it turned to OFF, the drive will accelerate to the setting frequency.<br> 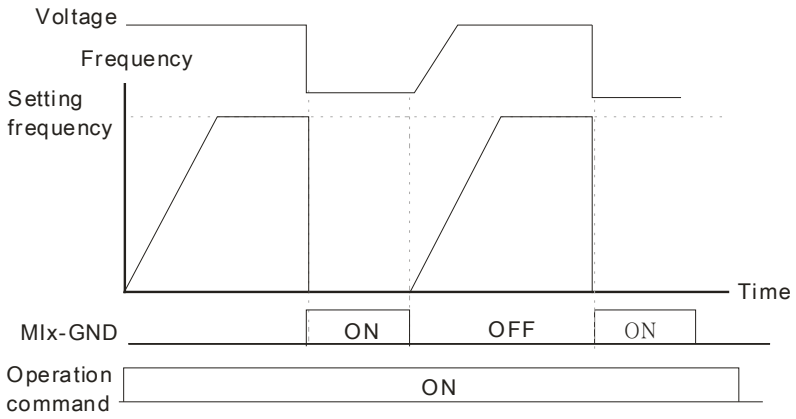 <br> |
| 13 | Cancel the setting of the optimal accel./decel. time | Before using this function, Pr.01-44 should be 01/02/03/04 first. When this function is enable, OFF is for auto mode and ON is for linear accel./decel. |
| 14 | Switch between drive settings 1 and 2 | When the contact of this function is ON: use motor 2 parameters. OFF: use motor 1 parameters. |
| 15 | Operation speed command form AVI1 | When the contact of this function is ON, the source of the frequency will force to be AVI. (If the operation speed commands are set to AVI1, ACI and AVI2 at the same time. The priority is AVI1＞ACI＞AVI2) |
| 16 | Operation speed command form ACI | When the contact of this function is ON, the source of the frequency will force to be ACI. (If the operation speed commands are set to AVI1, ACI and AVI2 at the same time. The priority is AVI1＞ACI＞AVI2) |
| 17 | Operation speed command form AVI2 | When the contact of this function is ON, the source of the frequency will force to be AVI2. (If the operation speed commands are set to AVI1, ACI and AVI2 at the same time. The priority is AVI1＞ACI＞AVI2) |
| 18 | Emergency Stop (07-20) | When the contact of this function is ON, the drive will ramp to stop by Pr.07-20 setting. |
| 19 | Digital Up command | When the contact of this function is ON, the frequency will be increased and decreased. If this function is constantly ON, the frequency will be increased / decreased by Pr.02-09/Pr.02-10.<br>The frequency command returns to zero when the drive stops, and the display frequency is 0.00Hz. Select Pr11-00, bit7=1, frequency is not saved. |
| 20 | Digital Down command | |
| 21 | PID function disabled | When the contact of this function is ON, the PID function is disabled. |

| Settings | Functions | Descriptions |
|---|---|---|
| 22 | Clear counter | When the contact of this function is ON, it will clear current counter value and display “0”. Only when this function is disabled, it will keep counting upward. |
| 23 | Input the counter value (multi-function input command 6) | The counter value will increase 1 once the contact of this function is ON. It needs to be used with Pr.02-19. |
| 24 | FWD JOG command | When the contact is ON, the drive will execute forward Jog command. |
| 25 | REV JOG command | When the contact is ON the drive will execute reverse Jog command. |
| 28 | Emergency stop (EF1) | When the contact is ON, the drive will execute emergency stop and display EF1 on the keypad. The motor won’t run and be in the free run until the fault is cleared after pressing RESET” (EF: External Fault) 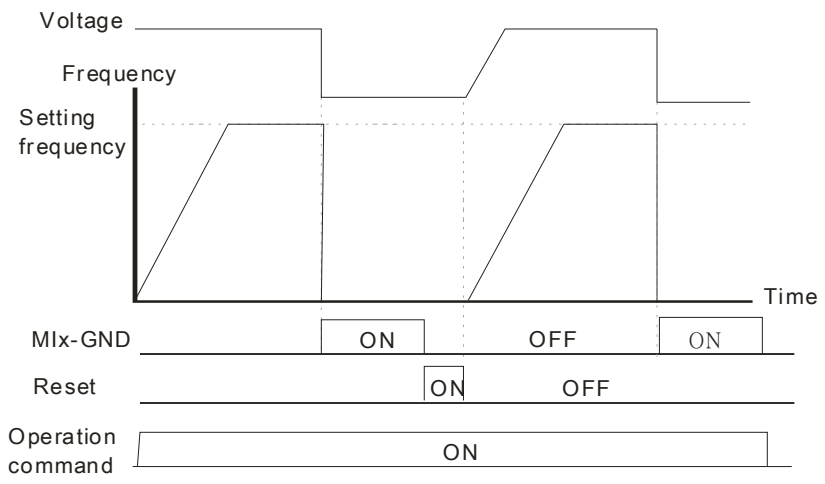  |
| 29 | Signal confirmation for Y-connection | When is the contact of this function is ON, the drive will operate by 1st V/F. |
| 30 | Signal confirmation for Δ-connection | When the contact of this function is ON, the drive will operate by 2nd V/F. |
| 38 | Disable EEPROM write function (Parameters written disable) | When the contact of this function is ON, write to EEPROM is disabled. (Changed parameters will not be saved after power off) |
| 40 | Force coast to stop | When the contact of this function is ON during the operation, the drive will free run to stop. |
| 41 | HAND switch | 1. When MI switched to off status, it executes a STOP command. , If MI switched to off during operation, the drive will |

<table>
<tr><th>Settings</th><th>Functions</th><th>Descriptions</th></tr>
<tr><td>42</td><td>AUTO switch</td><td>also stop.<br>2. Using keypad KPC-CC01 to switch between HAND/AUTO, the drive will stop first then switch to the HAND or AUTO status.<br>3. On the digital keypad KPC-CC01, it will display current drive status (HAND/OFF/AUTO).
<table>
<tr><th></th><th>bit 1</th><th>bit 0</th></tr>
<tr><td>OFF</td><td>0</td><td>0</td></tr>
<tr><td>AUTO</td><td>0</td><td>1</td></tr>
<tr><td>HAND</td><td>1</td><td>0</td></tr>
<tr><td>OFF</td><td>1</td><td>1</td></tr>
</table></td></tr>
<tr><td>49</td><td>Drive enable</td><td>When drive=enable, RUN command is valid.<br>When drive= disable, RUN command is invalid.<br>When drive is in operation, motor coast to stop.<br>This function will interact with MO=45</td></tr>
<tr><td>50</td><td>Slave dEb action to execute</td><td>Input the message setting in this parameter when dEb occurs to Master. This will ensure dEb also occurs to Slave, then Master and Slave will stop simultaneously.</td></tr>
<tr><td>51</td><td>Selection for PLC mode bit0</td><td rowspan="2">
<table>
<tr><td>PLC status</td><td>bit 1</td><td>bit 0</td></tr>
<tr><td>Disable PLC function (PLC 0)</td><td>0</td><td>0</td></tr>
<tr><td>Trigger PLC to operation (PLC 1)</td><td>0</td><td>1</td></tr>
<tr><td>Trigger PLC to stop (PLC 2)</td><td>1</td><td>0</td></tr>
<tr><td>No function</td><td>1</td><td>1</td></tr>
</table></td></tr>
<tr><td>52</td><td>Selection for PLC mode bit1</td></tr>
<tr><td>53</td><td>Enable CANopen quick stop</td><td>When this function is enabled under CANopen control, it will change to quick stop. Refer to Chapter 15 for more details.</td></tr>
<tr><td>54</td><td>UVW magnetic contactor ON/OFF</td><td>To receive confirmation signals while there is UVW magnetic contactor during output.</td></tr>
<tr><td>55</td><td>Brake release checking signal</td><td>This parameter needs to be used with P02-56. The main purpose is to make sure if mechanical brake works or not after triggering brake release command.<br>If the action is right, mechanical brake will give signal to MI terminal.<br>Please check time sequence chart for reference.</td></tr>
<tr><td>56</td><td>LOCAL/REMOTE Selection</td><td>Use Pr.00-29 to select for LOCAL/REMOTE mode (refer to Pr.00-29).<br>When Pr.00-29 is not set to 0, on the digital keypad KPC-CC01 it will display LOC/REM status. (It will display on the KPC-CC01 if the firmware version is above version 1.021).
<table>
<tr><th></th><th>Bit 0</th></tr>
<tr><td>REM</td><td>0</td></tr>
<tr><td>LOC</td><td>1</td></tr>
</table></td></tr>
<tr><td>58</td><td>Enable fire mode with RUN Command</td><td>Enable this function under fire mode to force the drive to run (while there is RUN COMMAND).</td></tr>
</table>

| Settings | Functions | Descriptions |
|---|---|---|
| 59 | Enable fire mode without RUN Command | Enable this function under fire mode to force the drive to run (while there **isn't** RUN COMMAND). |
| 60 | Disable all the motors | When the multi-motor circulative control is enable, all motors will park freely, when the function terminal set to be ON. |
| 61 | Disable Motor #1 | These functions work with multi-motor circulative control, motor #1 to # 8 can be set to park freely. If any of Auxiliary Motor#1 to Motor#8 is out of order or under maintenance, enable this terminal to bypass that motor. |
| 62 | Disable Motor #2 | |
| 63 | Disable Motor #3 | |
| 64 | Disable Motor #4 | |
| 65 | Disable Motor #5 | |
| 66 | Disable Motor #6 | |
| 67 | Disable Motor #7 | |
| 68 | Disable Motor #8 | |
| 69 | Preheating Command | When the function terminal is setting to ON, if the preheating function is open and drive is in STOP status, the preheating function is executed; until the contact status (OFF) or drive status is turned to RUN, the preheating function is stop. Please refer to Pr.02-72~73 for detail. |

## 02-09 UP/DOWN Key Mode

Factory Setting: 0

Settings 0: UP/DOWN by the accel./decel. time
1: UP/DOWN constant speed (Pr.02-10)

## 02-10 Constant speed. The Accel. /Decel. Speed of the UP/DOWN Key

Factory Setting: 0.001

Settings 0.001~1.000Hz/ms

- These settings are used when multi-function input terminals are set to 19/20. Refer to Pr.02-09 and 02-10 for the frequency up/down command.
- Pr11-00, Bit7=1, frequency command is not saved. The frequency command returns to zero when the drive stops, and the display frequency is 0.00Hz. The frequency command increase/decrease by using Up/Down key is effective only when the drive is at running status.
- Pr.02-09 set to 0: it will increase/decrease frequency command (F) by the setting of acceleration/deceleration (Pr.01-12~01-19)

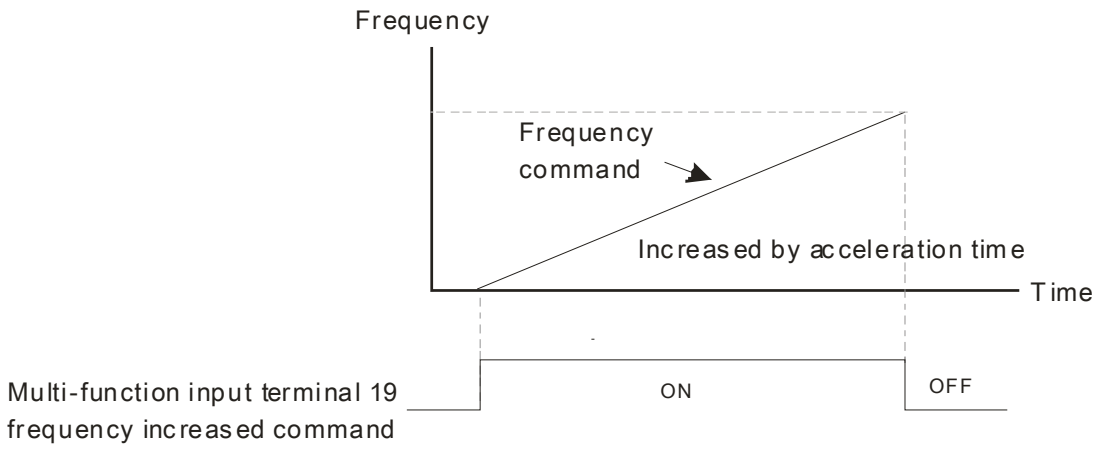


Pr.02-09 set to 1: use multi-function input terminal ON/OFF to increase/decrease the frequency command (F) according to the setting of Pr.02.10 (0.01~1.00Hz/ms).

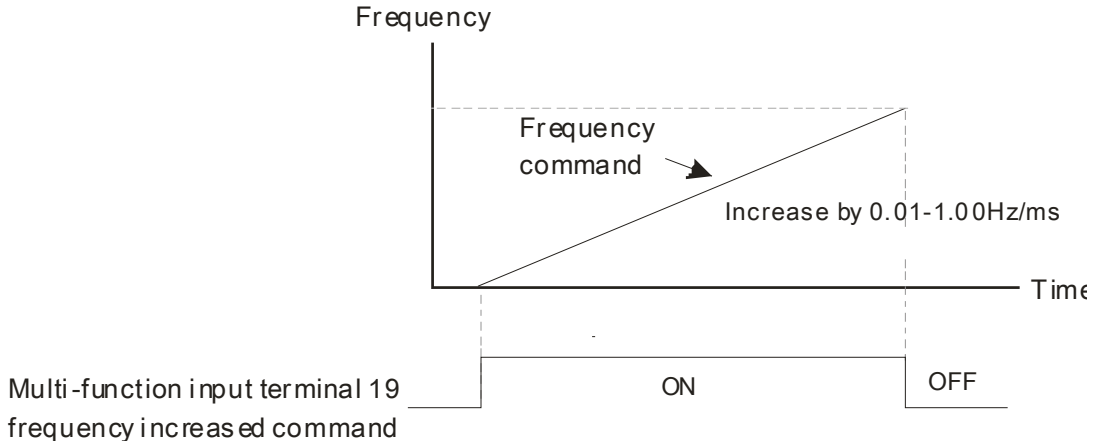


## 02-11 Digital Input Response Time

Factory Setting: 0.005

Settings 0.000~30.000 sec

This parameter is used to set the response time of digital input terminals FWD, REV and MI1~MI8.

It is used for digital input terminal signal delay and confirmation. The delay time is confirmation time to prevent some uncertain interference that would cause error in the input of the digital terminals. Under this condition, confirmation for this parameter would improve effectively, but the response time will be somewhat delayed.

When using MI8 as encoder pulse feedback input, this parameter will not be referred.

## 02-12 Digital Input Operation Setting

Factory Setting: 0000h

Settings 0000h~FFFFh (0: N.O ; 1: N.C)

The setting of this parameter is in hexadecimal.

This parameter is to set the status of multi-function input signal (0: Normal Open；1: Normal Close) and it is not affected by the SINK/SOURCE status.

- bit0 is for FWD terminal, bit1 is for REV terminal and bit2 to bit15 is for MI1 to MI14.
- User can change terminal status by communicating.
  For example, MI1 is set to 1 (multi-step speed command 1), MI2 is set to 2 (multi-step speed command 2). Then the forward + 2nd step speed command=1001(binary) =9 (Decimal). Pr.02-12=9 needs to be set by communication to run forward with 2nd step speed. No need to wire any multi-function terminal.

| bit15 | bit14 | bit13 | bit12 | bit11 | bit10 | bit9 | bit8 | bit7 | bit6 | bit5 | bit4 | bit3 | bit2 | bit1 | bit0 |
|---|---|---|---|---|---|---|---|---|---|---|---|---|---|---|---|
| MI14 | MI13 | MI12 | MI11 | MI10 | MI9 | MI8 | MI7 | MI6 | MI5 | MI4 | MI3 | MI2 | MI1 | REV | FWD |

- Through the Pr11-42, bit 1, it could make setting of FWD/REV terminals whether are controlled by Pr02-12, bit 0 & 1.

| | |
|---|---|
| 02-13 | Multi-function Output 1 (Relay1) |
| | Factory Setting: 11 |
| 02-14 | Multi-function Output 2 (Relay2) |
| | Factory Setting: 1 |
| 02-15 | Multi-function Output 3 (Relay3) |
| | Factory Setting: 66 |
| 02-36 | Output terminal of I/O extension card (MO10) or (RA10) |
| 02-37 | Output terminal of I/O extension card (MO11) or (RA11) |
| 02-38 | Output terminal of I/O extension card (MO12) or (RA12) |
| 02-39 | Output terminal of I/O extension card (MO13) or (RA13) |
| 02-40 | Output terminal of I/O extension card (MO14) or (RA14) |
| 02-41 | Output terminal of I/O extension card (MO15) or (RA15) |
| 02-42 | Output terminal of I/O extension card (MO16) |
| 02-43 | Output terminal of I/O extension card (MO17) |
| 02-44 | Output terminal of I/O extension card (MO18) |
| 02-45 | Output terminal of I/O extension card (MO19) |
| 02-46 | Output terminal of I/O extension card (MO20) |
| | Factory Setting: 0 |
| | Settings Refer to functions list below |

- This parameter is used for setting the function of multi-function terminals.
- Pr.02-36~Pr.02-41 requires additional extension cards to display the parameters, the choices of optional cards are EMC-D42A and EMC-R6AA.
- The optional card EMC-D42A provides 2 output terminals and can be used with Pr.02-36~02-37.
- The optional card EMC-R6AA provides 6 output terminals and can be used with Pr.02-36~02-41.
- Summary of function settings (Take the normally open contact for example, ON: contact is closed, OFF: contact is open)

| Settings | Functions | Descriptions |
|---|---|---|
| 0 | No Function | |
| 1 | Operation Indication | Active when the drive is not at STOP. |

| Settings | Functions | Descriptions |
|---|---|---|
| 2 | Master Frequency Attained | Active when the AC motor drive reaches the output frequency setting. |
| 3 | Desired Frequency Attained 1 (Pr.02-22) | Active when the desired frequency (Pr.02-22) is attained. |
| 4 | Desired Frequency Attained 2 (Pr.02-24) | Active when the desired frequency (Pr.02-24) is attained. |
| 5 | Zero Speed (frequency command) | Active when frequency command =0. (the drive should be at RUN mode) |
| 6 | Zero Speed with Stop (frequency command) | Active when frequency command =0 or stop. |
| 7 | Over Torque 1 | Active when detecting over-torque. Refer to Pr.06-07 (over-torque detection level-OT1) and Pr.06-08 (over-torque detection time-OT1). Refer to Pr.06-06~06-08. |
| 8 | Over Torque 2 | Active when detecting over-torque. Refer to Pr.06-10 (over-torque detection level-OT2) and Pr.06-11 (over-torque detection time-OT2). Refer to Pr.06-09~06-11. |
| 9 | Drive Ready | Active when the drive is ON and no abnormality detected. |
| 10 | Low voltage warn (Lv) | Active when the DC Bus voltage is too low. (refer to Pr.06-00 low voltage level) |
| 11 | Malfunction Indication | Active when fault occurs (except Lv stop). |
| 12 | Mechanical Brake Release (Pr.02-32) | When drive runs after Pr.02-32, it will be ON. This function should be used with DC brake and it is recommended to use contact “b” (N.C). |
| 13 | Overheat | Active when IGBT or heat sink overheats to prevent OH turn off the drive. (refer to Pr.06-15) |
| 14 | Software Brake Signal Indication | Active when the soft brake function is ON. (refer to Pr.07-00) |
| 15 | PID Feedback Error | Active when the feedback signal is abnormal. |
| 16 | Slip Error (oSL) | Active when the slip error is detected. |
| 17 | Terminal Count Value Attained (Pr.02-20; not return to 0) | Active when the counter reaches Terminal Counter Value (Pr.02-19). This contact will not active when Pr.02-20>Pr.02-19. |
| 18 | Preliminary Counter Value Attained (Pr.02-19; returns to 0) | Active when the counter reaches Preliminary Counter Value (Pr.02-19). |
| 19 | External Base Block input (B.B.) | Active when the output of the AC motor drive is shut off during base block. |
| 20 | Warning Output | Active when the warning is detected. |
| 21 | Over-voltage Warning | Active when the over-voltage is detected. |

| Settings | Functions | Descriptions |
|---|---|---|
| 22 | Over-current Stall Prevention Warning | Active when the over-current stall prevention is detected. |
| 23 | Over-voltage Stall prevention Warning | Active when the over-voltage stall prevention is detected. |
| 24 | Operation Mode Indication | Active when the operation command is controlled by external terminal. (Pr.00-21≠0) |
| 25 | Forward Command | Active when the operation direction is forward. |
| 26 | Reverse Command | Active when the operation direction is reverse. |
| 27 | Output when Current ≥ Pr.02-33 | Active when current is ≥ Pr.02-33. |
| 28 | Output when Current < Pr.02-33 | Active when current is < Pr.02-33 |
| 29 | Output when frequency ≥ Pr.02-34 | Active when frequency is ≥ Pr.02-34. |
| 30 | Output when Frequency < Pr.02-34 | Active when frequency is <Pr.02-34. |
| 31 | Y-connection for the Motor Coil | Active when PR.05-24=1, when frequency output is lower than Pr.05-23 minus 2Hz, continues longer than 05-25. |
| 32 | Δ-connection for the Motor Coil | Active when PR.05-24=1, when frequency output is higher than Pr.05-23 plus 2Hz, continues longer than 05-25. |
| 33 | Zero Speed (actual output frequency) | Active when the actual output frequency is 0. (the drive should be at RUN mode) |
| 34 | Zero Speed with Stop (actual output frequency) | Active when the actual output frequency is 0 or Stop. |
| 35 | Error Output Selection 1 (Pr.06-23) | Active when Pr.06-23 is ON. |
| 36 | Error Output Selection 2 (Pr.06-24) | Active when Pr.06-24 is ON. |
| 37 | Error Output Selection 3 (Pr.06-25) | Active when Pr.06-25 is ON. |
| 38 | Error Output Selection 4 (Pr.06-26) | Active when Pr.06-26 is ON. |
| 40 | Speed Attained (including zero speed) | Active when the output frequency reaches frequency setting or stop. |
| 44 | Low Current Output | This function needs to be used with Pr.06-71 ~ Pr.06-73 |
| 45 | UVW Phase Magnet Contractor ON/ OFF Switch | 1. Under FOCPG control mode, set MI=49 (drive enable) and MO=45 (electromagnetic contractor ON/OFF switch), then the magnetic contactor will follow the drive status to be ON or OFF.<br>2. For brake control, set MO=12 (mechanical brake release), Pr.02-31=T1 sec (mechanical brake delay time); then |

| Settings | Functions | Descriptions |
|---|---|---|
| | | enable/disable DC braking by set 07-01 (DC brake current) to any level except 0 and set Pr.07-02 = T2 (DC brake time at start up) and Pr.07-03 = T2 (DC brake current at stop). It is recommend to set T2 >T1 and try to activate brake control during zero-speed status.<br> 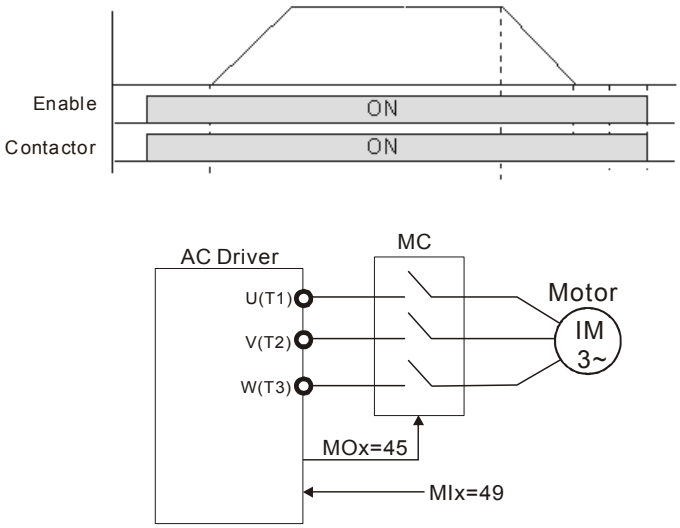 <br> |
| 47 | Brake Release at Stop | When drive stops, the corresponding multi-function terminal will be ON if the frequency is less than Pr.02-34. After it is ON, it will be OFF when brake delay time exceeds Pr.02-32.<br> 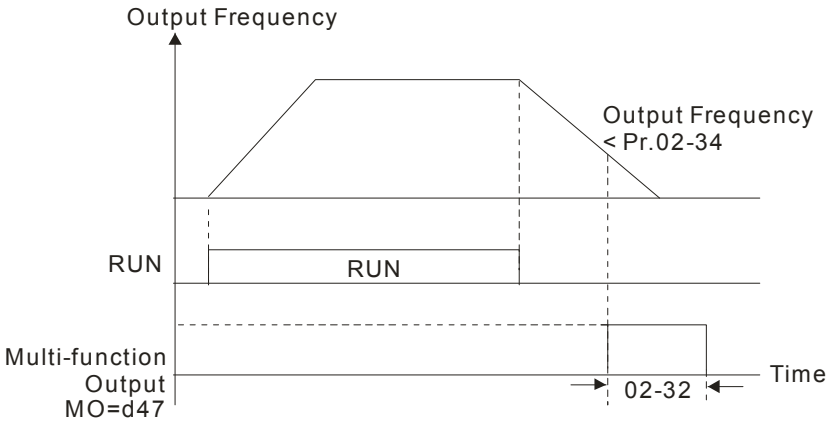 <br> |

<table>
<tr><th>Settings</th><th>Functions</th><th>Descriptions</th></tr>
<tr><td>50</td><td>Output for CANopen control</td><td>Control multi-function output terminals through CANopen.<br>If to control RY2, then the Pr02-14 = 50.<br>The mapping table of the CANopen DO is below:
<table>
<tr><th>physical terminal</th><th>Setting of related parameters</th><th>Attribute</th><th>Corresponding Index</th></tr>
<tr><td>RY1</td><td>02-13 = 50</td><td>RW</td><td>The bit 0 at 2026-41</td></tr>
<tr><td>RY2</td><td>02-14 = 50</td><td>RW</td><td>The bit 1 at 2026-41</td></tr>
<tr><td>MO1</td><td>02-16 = 50</td><td>RW</td><td>The bit 3 at 2026-41</td></tr>
<tr><td>MO2</td><td>02-17 = 50</td><td>RW</td><td>The bit 4 at 2026-41</td></tr>
<tr><td>MO10</td><td rowspan="2">02-36 = 50</td><td rowspan="2">RW</td><td>The bit 5 at 2026-41</td></tr>
<tr><td>RY10</td><td>The bit 5 at 2026-41</td></tr>
<tr><td>MO11</td><td rowspan="2">02-37 = 50</td><td rowspan="2">RW</td><td>The bit 6 at 2026-41</td></tr>
<tr><td>RY11</td><td>The bit 6 at 2026-41</td></tr>
<tr><td>RY12</td><td>02-38 = 50</td><td>RW</td><td>The bit 7 at 2026-41</td></tr>
<tr><td>RY13</td><td>02-39 = 50</td><td>RW</td><td>The bit 8 at 2026-41</td></tr>
<tr><td>RY14</td><td>02-40 = 50</td><td>RW</td><td>The bit 9 at 2026-41</td></tr>
<tr><td>RY15</td><td>02-41 = 50</td><td>RW</td><td>The bit 10 at 2026-41</td></tr>
</table>
Refer to Chapter 15-3-5 for more information.</td></tr>
<tr><td>51</td><td>Output for RS-485</td><td>For RS485 output.</td></tr>
<tr><td>52</td><td>Output for communication card</td><td>For communication output of communication cards<br>(CMC-MOD01, CMC-EIP01, CMC-PN01 and CMC-DN01)
<table>
<tr><th>Physical terminal</th><th>Setting of related parameters</th><th>Attribute</th><th>Corresponding Address</th></tr>
<tr><td>RY1</td><td>P2-13 = 51</td><td>RW</td><td>The bit 0 of 2640</td></tr>
<tr><td>RY2</td><td>P2-14 = 51</td><td>RW</td><td>The bit 1 of 2640</td></tr>
<tr><td>RY3</td><td>P2-15 = 51</td><td>RW</td><td>The bit 2 of 2640</td></tr>
<tr><td>MO1</td><td>P2-16 = 51</td><td>RW</td><td>The bit 3 of 2640</td></tr>
<tr><td>MO2</td><td>P2-17 = 51</td><td>RW</td><td>The bit 4 of 2640</td></tr>
<tr><td>MO3</td><td>P2-18 = 51</td><td>RW</td><td>The bit 5 of 2640</td></tr>
<tr><td>MO4</td><td>P2-19 = 51</td><td>RW</td><td>The bit 6 of 2640</td></tr>
<tr><td>MO5</td><td>P2-20 = 51</td><td>RW</td><td>The bit 7 of 2640</td></tr>
<tr><td>MO6</td><td>P2-21 = 51</td><td>RW</td><td>The bit 8 of 2640</td></tr>
<tr><td>MO7</td><td>P2-22 = 51</td><td>RW</td><td>The bit 9 of 2640</td></tr>
<tr><td>MO8</td><td>P2-23 = 51</td><td>RW</td><td>The bit 10 of 2640</td></tr>
</table></td></tr>
<tr><td>53</td><td>Fire mode indication</td><td>When #58 or #59 is enabled, this function will work.</td></tr>
<tr><td>54</td><td>By pass fire mode indication</td><td>When bypass function is enabled in the fire mode, this contact will work.</td></tr>
</table>

<table>
<tr><th>Settings</th><th>Functions</th><th>Descriptions</th></tr>
<tr><td>55</td><td>Motor #1 output</td><td rowspan="8">When setting multi-motor circulative function, the multi-function output terminal will automatically set up Pr02-13~Pr02-15 and Pr02-36~Pr02-40 in accordance with Pr12-01's setting.</td></tr>
<tr><td>56</td><td>Motor #2 output</td></tr>
<tr><td>57</td><td>Motor #3 output</td></tr>
<tr><td>58</td><td>Motor #4 output</td></tr>
<tr><td>59</td><td>Motor #5 output</td></tr>
<tr><td>60</td><td>Motor #6 output</td></tr>
<tr><td>61</td><td>Motor #7 output</td></tr>
<tr><td>62</td><td>Motor #8 output</td></tr>
<tr><td>66</td><td>SO contact A (N.O.)</td><td rowspan="2"><table>
<tr><th rowspan="2">Status of drive</th><th colspan="2">Status of safety output</th></tr>
<tr><th>N.O. (MO=66)</th><th>N.C. (MO=68)</th></tr>
<tr><td>Normal</td><td>Broken circuit (Open)</td><td>Short circuit (Close)</td></tr>
<tr><td>STO</td><td>Short circuit (Close)</td><td>Broken circuit (Open)</td></tr>
<tr><td>STL1~STL3</td><td>Short circuit (Close)</td><td>Broken circuit (Open)</td></tr>
</table></td></tr>
<tr><td>68</td><td>SO contact B (N.C.)</td></tr>
<tr><td>67</td><td>Analog input signal level achieved</td><td>Multi-function output terminals operate when analog input signal level is between high level and low level.<br>03-44: Select the analog signal channel, AVI1, ACI, and AVI2 which is going to be compared.<br>03-45: The high level of analog input, factory setting is 50%.<br>03-46: The low level of analog input, factory setting is 10%.<br>If analog input > 03-45, then multi-function output terminal operates.<br>If analog input < 03-46, then multi-function output terminal stops outputting.</td></tr>
<tr><td>69</td><td>Output Command of Preheating</td><td>Active when the preheating is detected.</td></tr>
</table>

## 02-18 Multi-function Output Setting

Factory Setting: 0000

Settings 0000h~FFFFh (0:N.O.; 1:N.C.)

- The setting of this parameter is in hexadecimal.
- This parameter is set via bit setting. If a bit is 1, the corresponding multi-function output acts in the opposite way.

  Example:

  If Pr02-13=1 and Pr02-18=0, Relay 1 is ON when the drive runs and is open when the drive is stopped.

  If Pr02-13=1 and Pr02-18=1, Relay 1 is open when the drive runs and is closed when the drive is stopped.

bit setting

| bit15 | bit14 | bit13 | bit12 | bit11 | bit10 | bit9 | bit8 | bit7 | bit6 | bit5 | bit4 | bit3 | bit2 | bit1 | bit0 |
|---|---|---|---|---|---|---|---|---|---|---|---|---|---|---|---|
| MO20 | MO19 | MO18 | MO17 | MO16 | MO15 | MO14 | MO13 | MO12 | MO11 | MO10 | Reserved | | RY3 | RY2 | RY1 |

## 02-19 Terminal Counting Value Attained (return to 0)

Factory Setting: 0

Settings 0~65500

- The counter trigger can be set by the multi-function terminal MI6 (set Pr.02-06 to 23). Upon completion of counting, the specified multi-function output terminal will be activated (Pr.02-13~02-14, Pr.02-36, 02-37 is set to 18). Pr.02-19 can't be set to 0.
- When the display shows c5555, the drive has counted 5,555 times. If display shows c5555•, it means that real counter value is between 55,550 to 55,559.

## 02-20 Preliminary Counting Value Attained (not return to 0)

Factory Setting: 0

Settings 0~65500

- When the counter value counts from 1 and reaches this value, the corresponding multi-function output terminal will be activated, provided one of Pr. 02-13, 02-14, 02-36, 02-37 set to 17 (Preliminary Count Value Setting). This parameter can be used for the end of the counting to make the drive runs from the low speed to stop.

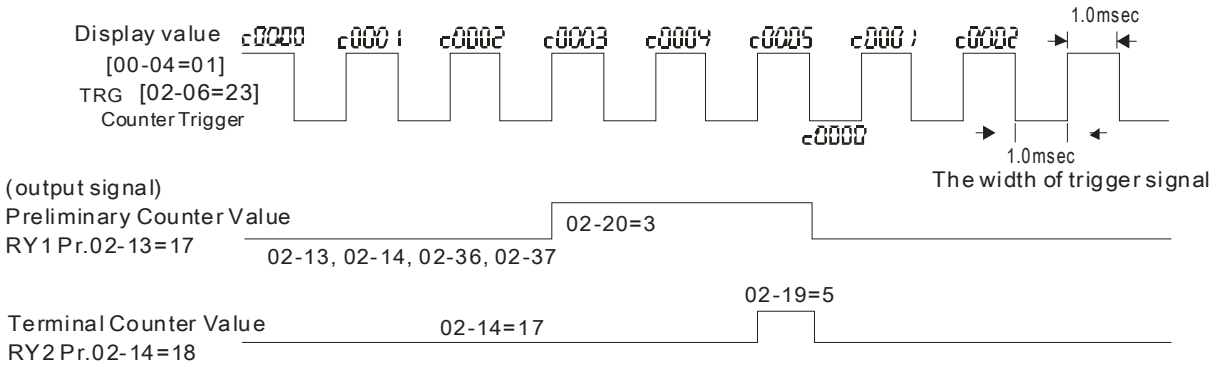


## 02-22 Desired Frequency Attained 1

## 02-24 Desired Frequency Attained 2

Factory Setting: 60.00/50.00

Settings 0.00~599.00Hz

## 02-23 The Width of the Desired Frequency Attained 1

## 02-25 The Width of the Desired Frequency Attained 2

Factory Setting: 2.00

Settings 0.00~599.00Hz

- Once output frequency reaches desired frequency and the corresponding multi-function output terminal is set to 3 or 4 (Pr.02-13, 02-14, 02-36, and 02-37), this multi-function output terminal will be ON.

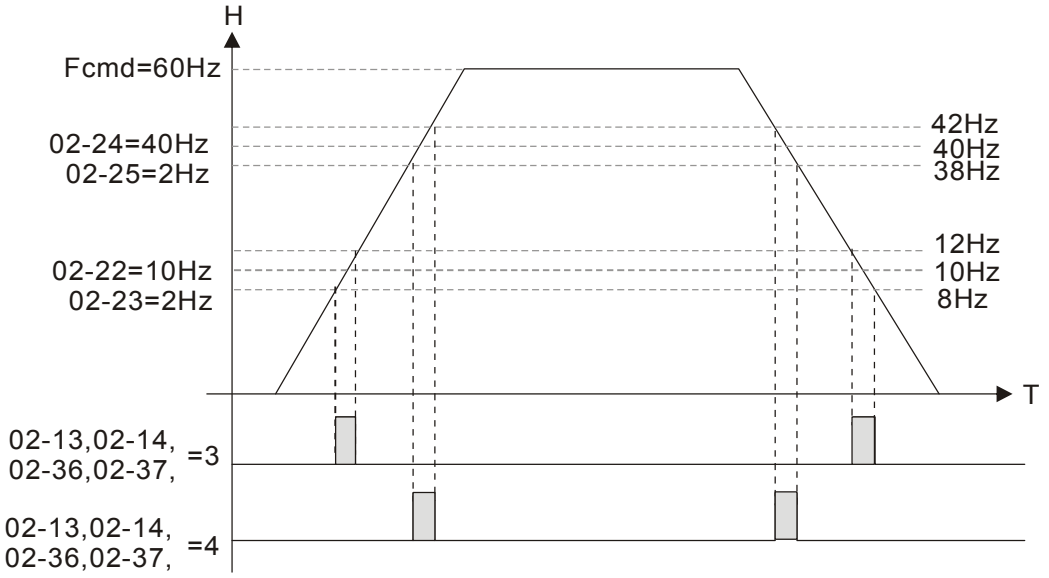


## 02-32 Brake Delay Time

Factory Setting: 0.000

Settings 0.000~65.000 sec

When the AC motor drive runs after Pr.02-32 delay time, the corresponding multi-function output terminal (12: mechanical brake release) will be ON. It has to use this function with DC brake.

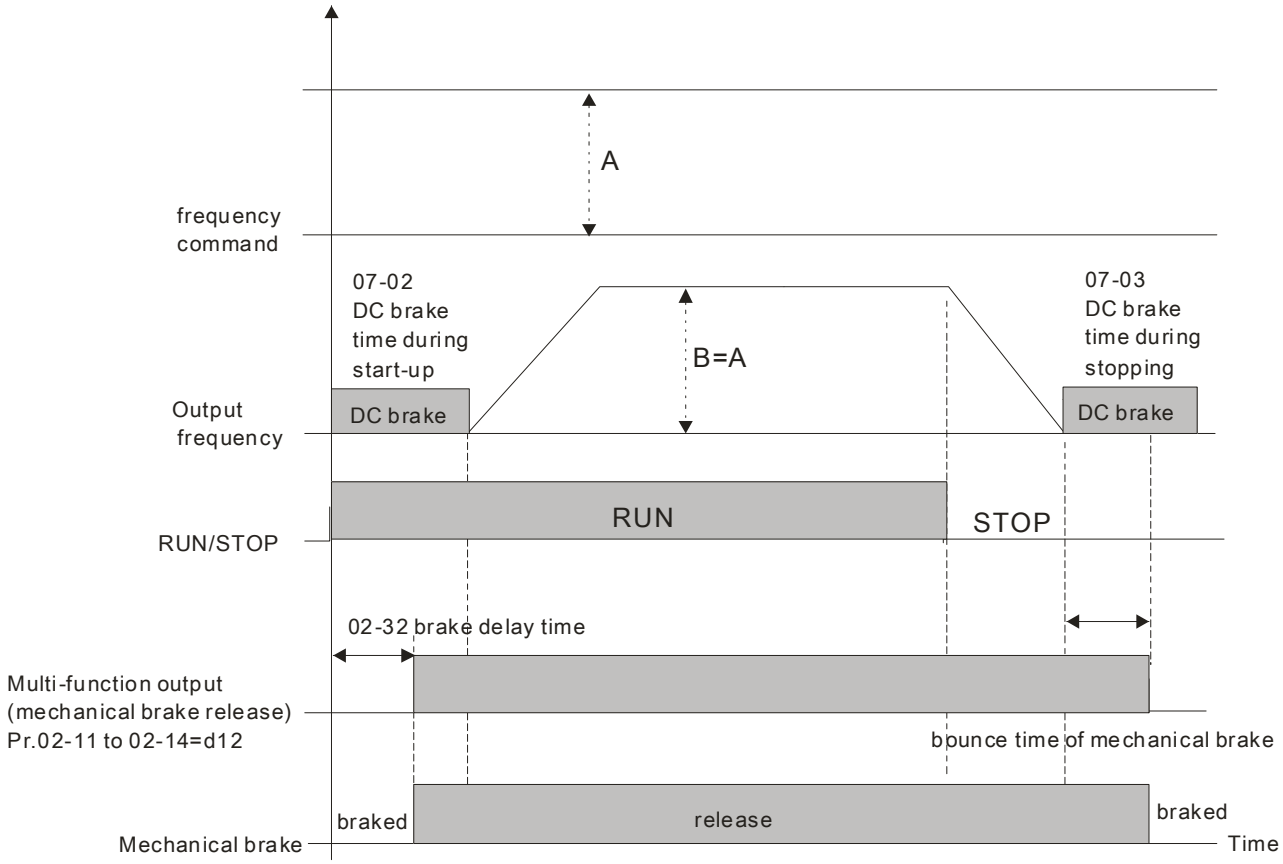


If this parameter is used without DC brake, it will be invalid. Refer to the following operation timing.

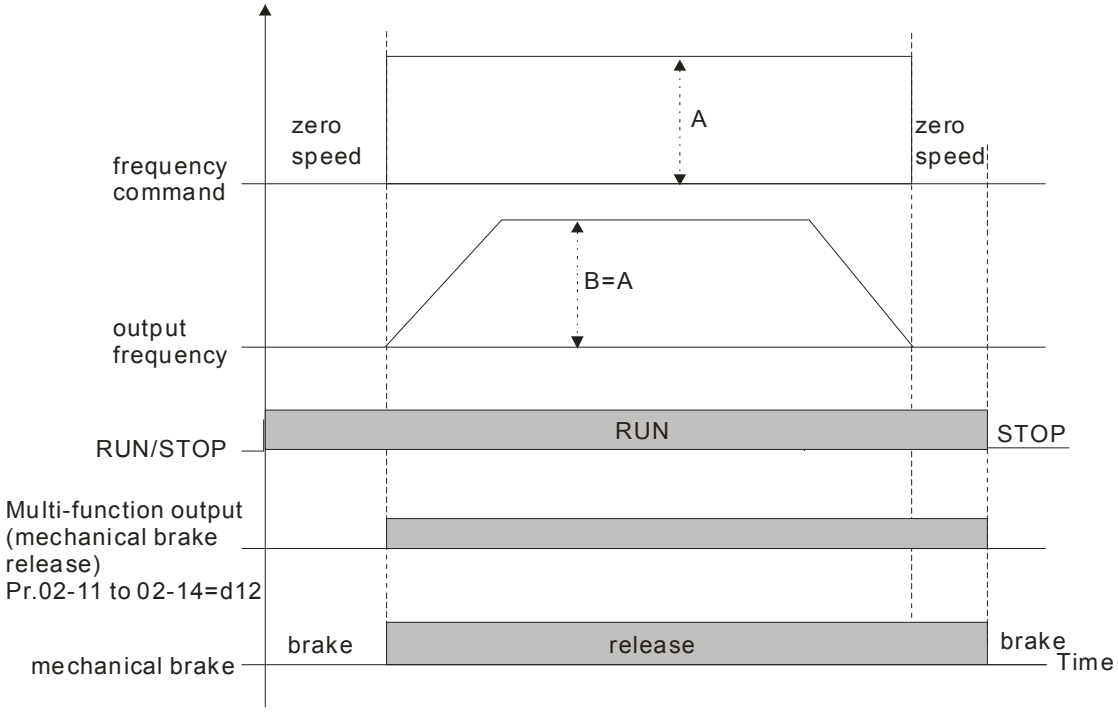


## 02-33 Output Current Level Setting for Multi-function Output Terminals

Factory Setting: 0

Settings 0~150%

When output current is higher or equal to Pr.02-33, it will activate multi-function output terminal (Pr.02-13, 02-14, and 02-15 is set to 27).

When output current is lower to Pr.02-33, it will activate multi-function output terminal (Pr.02-13, 02-14, and 02-15 is set to 28).

## 02-34 Output Boundary for Multi-function Output Terminals

Factory Setting: 3.00

Settings 0.00~599.00Hz

When output frequency is higher or equal to Pr.02-34, it will activate the multi-function terminal (Pr.02-13, 02-14, and 02-15 is set to 29).

When output frequency is lower to Pr.02-34, it will activate the multi-function terminal (Pr.02-13, 02-14, 02-16, 02-15 is set to 30).

## 02-35 External Operation Control Selection after Reset and Activate

Factory Setting: 0

Settings 0: Disable

1: Drive runs if the run command still exists after reset or re-boots.

Setting 1:

Status 1: After the drive is powered on and the external terminal for RUN keeps ON, the drive will run.

Status 2: After clearing fault once a fault is detected and the external terminal for RUN keeps ON, the drive can run after pressing RESET key.

## 02-50 Display the Status of Multi-function Input Terminal

Factory Setting: Read only

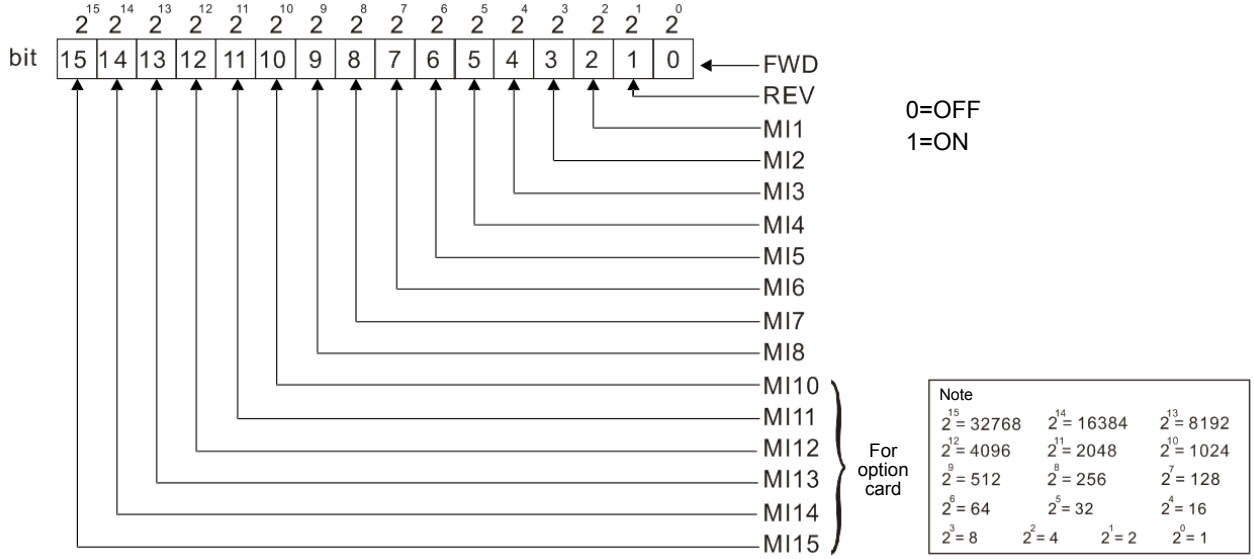


For Example:

If Pr.02-50 displays 0034h (Hex), i.e. the value is 52, and 110100 (binary). It means MI1, MI3 and MI4 are active.

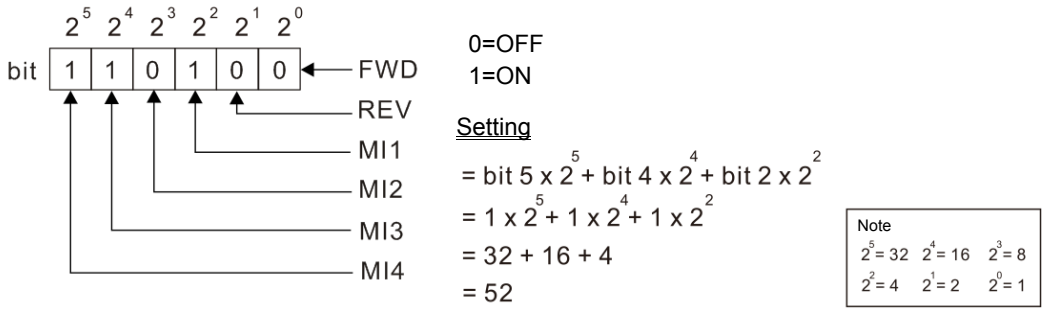


## 02-51 Status of Multi-function Output Terminal

Factory Setting: Read only

For Example:

If Pr.02-51 displays 000Bh (Hex), i.e. the value is 11, and 1011 (binary). It means RY1, RY2 and MO1 are ON.

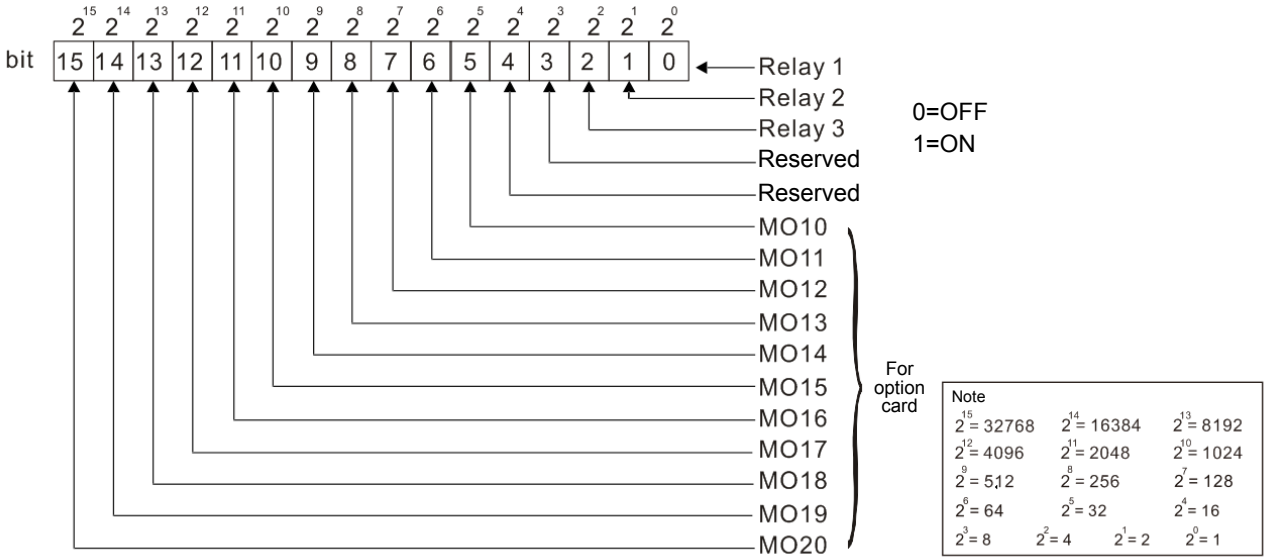

For Example:

If Pr.02-51 displays 003Bh (Hex), i.e. the value is 11, and 100011 (binary). It means RY1, RY2 and MO10 are active.

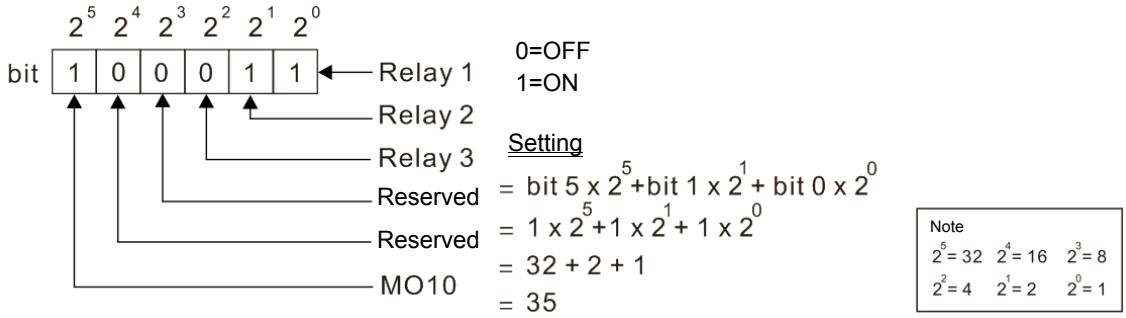


## 02-52 Display External Output terminal occupied by PLC

Factory Setting: Read only

P.02-52 shows the external multi-function input terminal that used by PLC.

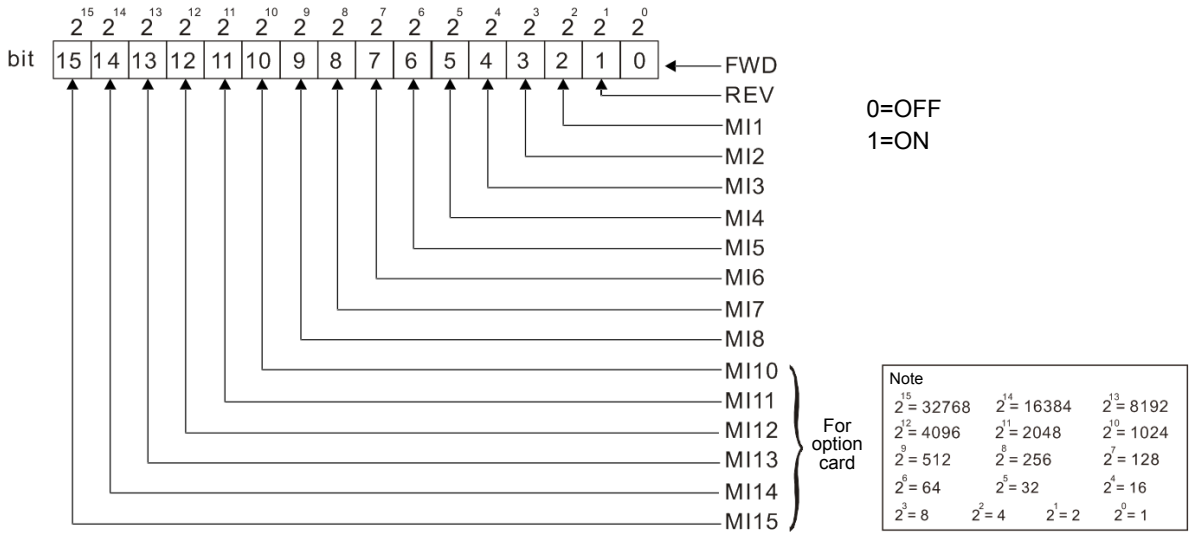


For Example:

When Pr.02-52 displays 0034h(hex) and switching to 110100 (binary), it means MI1, MI3 and MI4 are used by PLC.

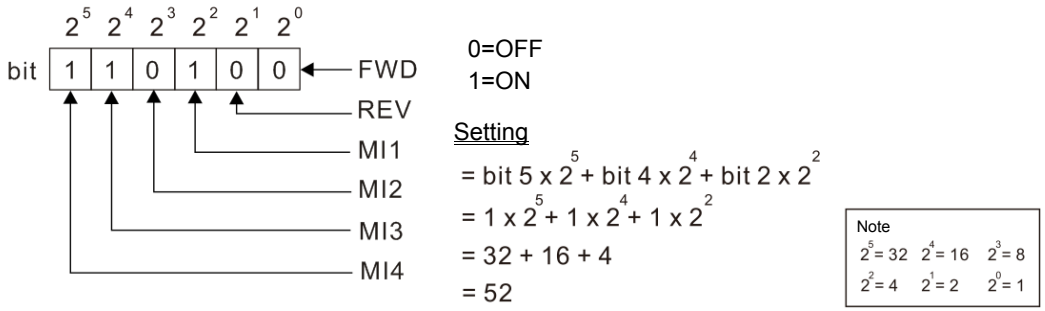

## 02-53 Display External Multi-function Output Terminal occupied by PLC

Factory Setting: Read only

P.02-53 shows the external multi-function output terminal that used by PLC.

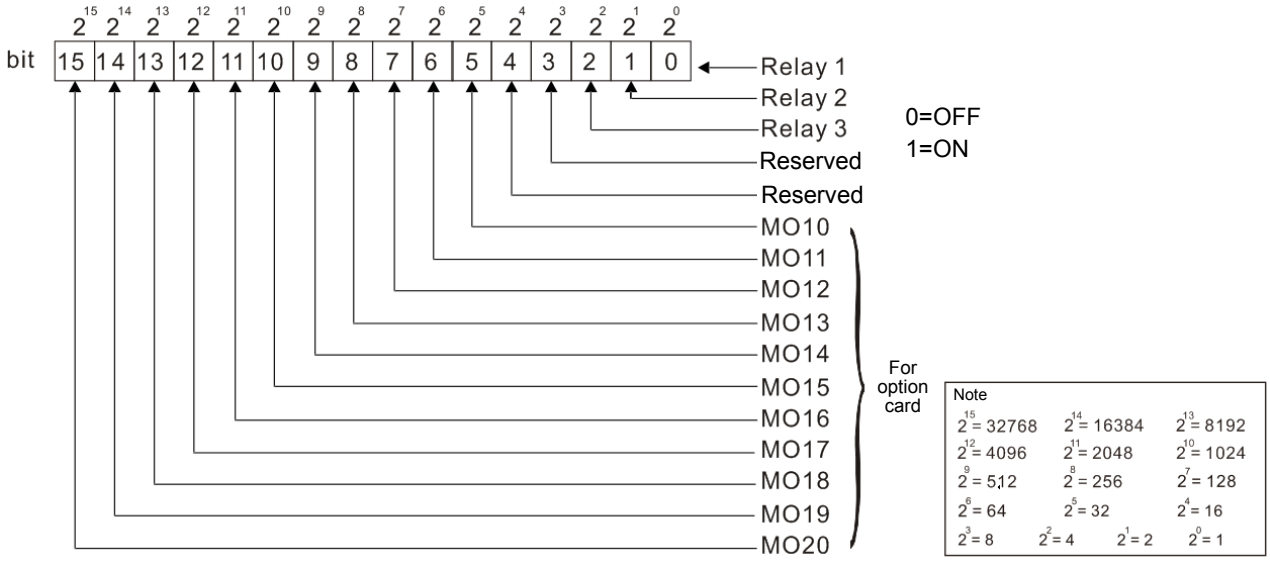


For Example:
If the value of Pr.02-53 displays 0003h (Hex), it means RY1and RY2 are used by PLC.

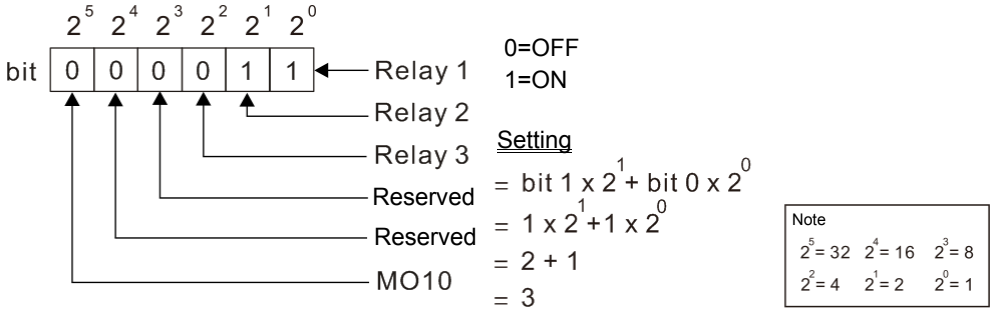


## 02-54 Display the Frequency Command Executed by External Terminal

Factory Setting: Read only

Settings 0.00~599.00Hz (Read only)

When the source of frequency command comes from the external terminal, if Lv or Fault occurs at this time, the frequency command of the external terminal will be saved in this parameter.

## 02-70 IO Card Type

Factory setting: Read only

Settings
- 0: No IO card
- 1: EMC-BPS01 card
- 2: No IO card
- 3: No IO card
- 4: EMC-D611A card
- 5: EMC-D42A card
- 6: EMC-R6AA card
- 7: No IO card

## 02-72 Output Current Level of Preheating

Factory Setting: 0

Settings 0~100%

When a motor drive is not in operation (STOP) and is placed in a cold and humid environment, enable the preheating function to output DC current to heat up the motor drive can prevent the invasion of the humidity to the motor drive which creates condensation affecting the normal function of the motor drive.

This parameter sets the output current level from the motor drive to the motor after enabling the preheating. The percentage of the preheating DC current is 100% to the rated current of the motor drive (Pr.05-01, Pr.05-13, and Pr.05-34). When setting this parameter, increase slowly the percentage to reach the sufficient preheating temperature.

## 02-73 Output Current Cycle of Preheating

Factory Setting: 0

Settings 0~100%

This parameter sets the output current cycle of preheating. 0~100% corresponds to 0~10 seconds. When set to 0%, there is no output current. When set to 100%, there is a continuous output. For example, when set to 50%, a cycle of preheating goes from OFF (5 seconds) to ON (5 seconds) and vice versa.

Related Parameters of Preheating

| Parameter | Description | Setting Range | Explanation |
|---|---|---|---|
| 02-72 | Output Current Level of Preheating | 0~100% (Rated Current of the Motor)<br>0% No output | |
| 02-73 | Output Cycle of Preheating | 0~100% (0~10sec)<br>0% No output<br>100% Continuous output | |
| 02-01~08<br>02-26~31 | Multi-Input Function Commands (MFI) | 69 Preheating Command | Enable or Disable the Preheating |
| 02-13~15<br>02-36~46 | Multi-Output Function Commands (MFO) | 69 Output Command of Preheating | Indication of the Preheating |

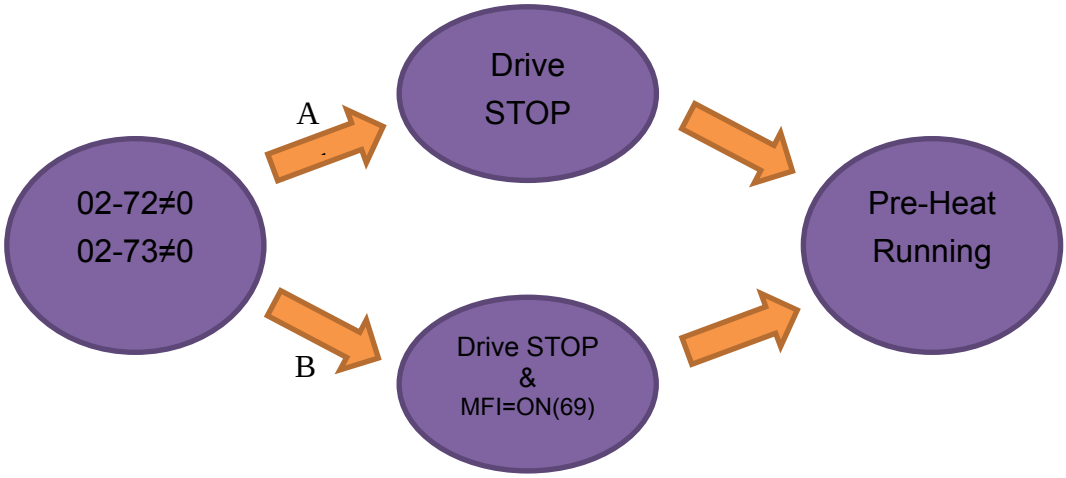


Enable the Preheating: When Pr02-72 and Pr02-73 are NOT set to zero, the preheating is enabled.

- Preheating Function A: If Pr07-72 and Pr07-23 are set before the motor drive stops operation (STOP), the preheating will be enabled right after the motor drive stops. However if Pr07-72 and Pr07-73 are set after the motor drives stops operation, then preheating will not be enabled. Only after the motor drive stops again or restarts, the preheating will be enabled.
- Preheating Function B: When motor drive is in operation (RUN) or stops operating (STOP), set Pr02-72 and Pr02-73 between 1%~100% and set MFI= 69 and MFI = On. The preheating will be enabled when the motor drive stops; No matter if the motor drive is in operation (RUN) or stops operating (STOP).
- Operation priority: When both the preheating function A and B are given, the function B has the priority to operate.
- Sequential Diagram of the Preheating Function:

1. Setting Parameters to Enable Preheating (Function A)

Set Pr02-72 and Pr02-73 not equal to zero (Diagram 50%) and stop running the motor drive, then the preheating will be enabled to output DC current. In the meantime, MFO (Output Command of Preheating) will be ON (MFO =69). Once repower on, the preheating function will be enabled right away. Besides, the sequence of preheating goes from OFF (5 seconds) to ON (5 seconds). When the motor is in operation (RUN), the preheating function will be off even it is enabled. Meanwhile, MFO is OFF (MFO =69) and the preheating will be enabled when the motor drive stops.

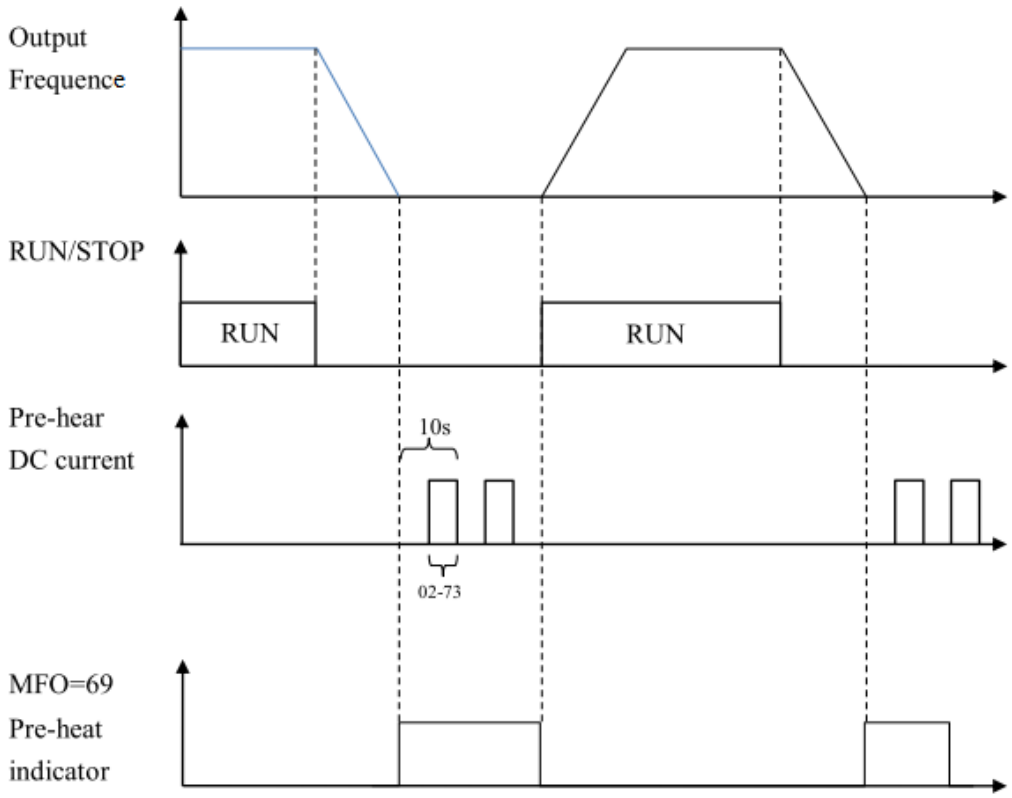

2. Enable Preheating via Multi-Input Terminals (Function B)

Set Pr02-72 and Pr02-73 (Diagram 50%) not equal to zero and set MFI=69, MFI = ON, then this Function B has the priority to enable/ disable the preheating on the motor drive. In the meantime, the preheating by parameters is automatically ineffective. If, at this moment, the motor drive is already not in operation (STOP), the preheating will be enabled to output DC current and MFO (Output Command of Preheating) will be ON (MFO =69). Besides, the sequence of preheating goes from OFF(5 seconds) to ON(5 seconds). When the motor is in operation (RUN), the preheating function will be off even it is enabled. Meanwhile, MFO is OFF (MFO =69) and the preheating will be enabled when the motor drive stops.

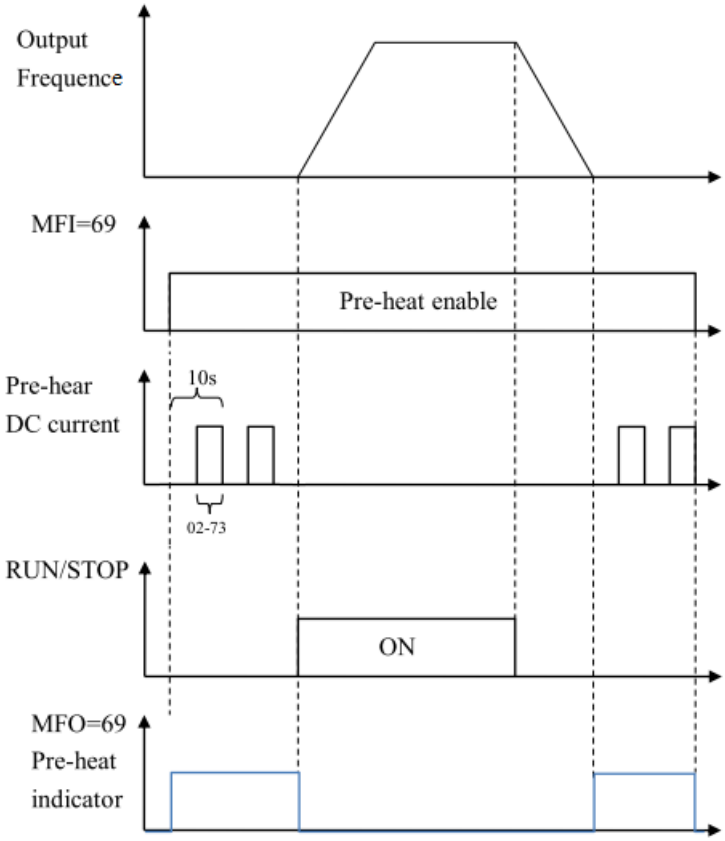

3. Enable DC Brake Function

DC brake and preheating are enabled at the same time. The motor drive operates in the same logic as mentioned above. The only difference is that when the motor drive is in operation (RUN) or stops operating (STOP), DC brake will be enabled first. Then when motor drive stops, preheating will be activated.

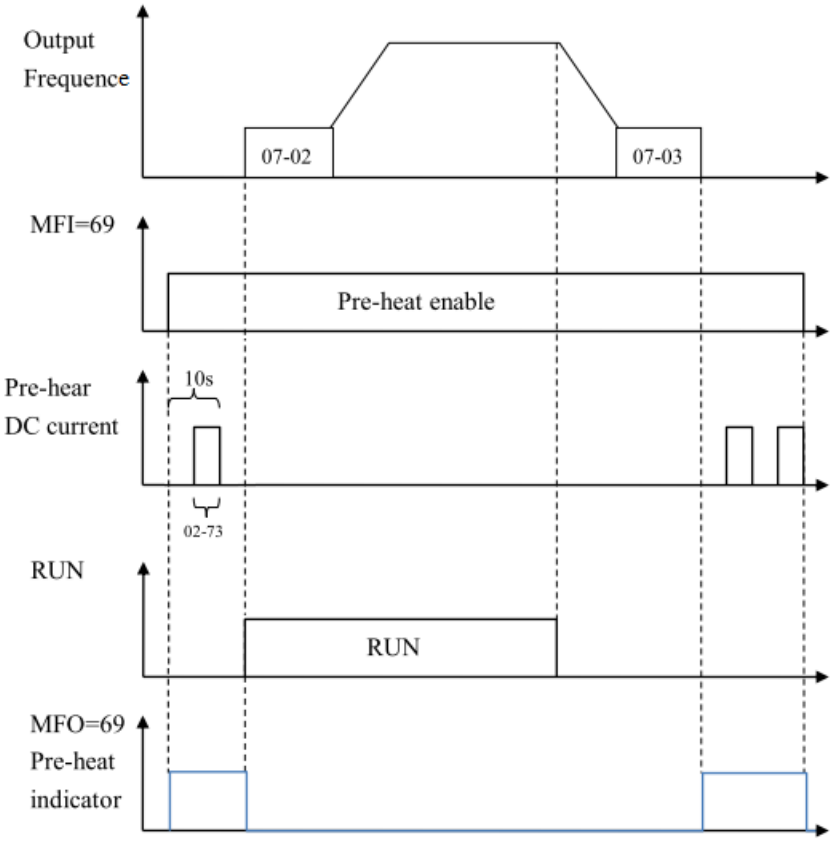

# 03 Analog Input/Output Parameter

✓ This parameter can be set during operation.

✓ **03-00** Analog Input Selection (AVI1)

Factory Setting: 1

✓ **03-01** Analog Input Selection (ACI)

Factory Setting: 0

✓ **03-02** Analog Input Selection (AVI2)

Factory Setting: 0

Settings

0: No function

1: Frequency command (speed limit under torque control mode)

4: PID target value

5: PID feedback signal

6: PTC thermistor input value

11: PT100 thermistor input value

13: PID bias value

📖 When use analog input as PID reference value, Pr00-20 must set 2 (analog input).

Setting method 1: Pr03-00~03-02 set 1 as PID reference input

If 1 and 4 setting are coexistent, AVI1 will be the priority as PID reference value.

📖 When use analog input as PID compensation value, Pr08-16 must set 1(Source of PID compensation is analog input). The compensation value can be observed via Pr08-17.

📖 When it is frequency command or TQC speed limit, the corresponding value for 0~±10V/4~20mA is 0 – max. output frequency(Pr.01-00)

📖 When Pr.03-00~Pr.03-02 have the same setting, then the AVI1 will be the prioritized selection.

✓ **03-03** Analog Input Bias (AVI1)

Factory Setting: 0.0

Settings -100.0~100.0%

📖 It is used to set the corresponding AVI voltage of the external analog input 0.

✓ **03-04** Analog Input Bias (ACI)

Factory Setting: 0.0

Settings -100.0~100.0%

📖 It is used to set the corresponding ACI voltage of the external analog input 0.

✓ **03-05** Analog Voltage Input Bias (AVI2)

Factory Setting: 0.0

Settings -100.0~100.0%

📖 It is used to set the corresponding AVI2 voltage of the external analog input 0.

📖 The relation between external input voltage/current and setting frequency: 0~10V (4-20mA) corresponds to 0~Pr01-00 (max. operation frequency).

## 03-07 Positive/negative Bias Mode (AVI1)
## 03-08 Positive/negative Bias Mode (ACI)
## 03-09 Positive/negative Bias Mode (AVI2)

Factory Setting: 0

Settings
0: Zero bias
1: Lower than or equal to bias
2: Greater than or equal toe bias
3: The absolute value of the bias voltage while serving as the center
4: Serve bias as the center

In a noisy environment, it is advantageous to use negative bias to provide a noise margin. It is recommended NOT to use less than 1V to set the operation frequency.

## 03-10 Analog Frequency Command for Reverse Run

Factory Setting: 0

Settings
0: Negative frequency is not valid. Forward and reverse run is controlled by digital keypad or external terminal.
1: Negative frequency is valid. Positive frequency = forward run; negative frequency = reverse run. Run direction can not be switched by digital keypad or the external terminal control.

Condition for negative frequency (reverse)

1. Pr03-10=1
2. Bias mode=Serve bias as center
3. Corresponded analog input gain < 0(negative), make input frequency be negative.

In using addition function of analog input (Pr03-18=1), when analog signal is negative after adding, this parameter can be set for allowing reverse or not. The result after adding will be restricted by “Condition for negative frequency (reverse)”

**In the diagram below: Black line: Curve with no bias. Gray line: curve with bias**

1.

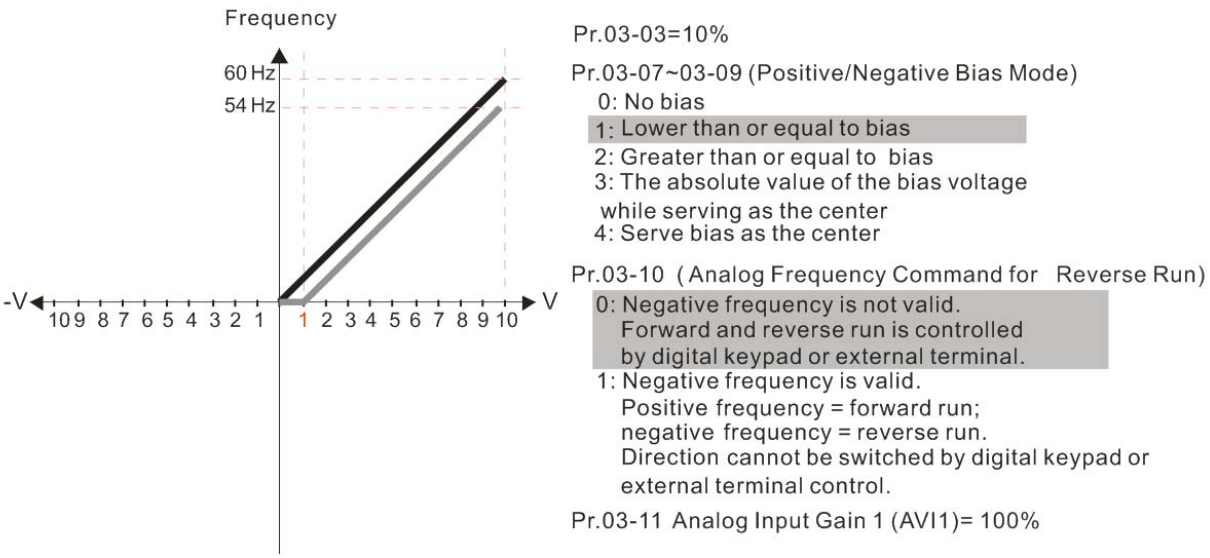

2.

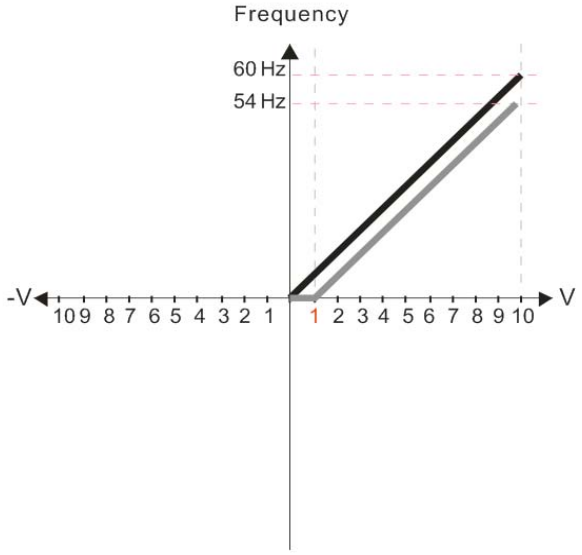


Pr.03-03=10%

Pr.03-07~03-09 (Positive/Negative Bias Mode)

0: No bias
1: Lower than or equal to bias
2: Greater than or equal to bias
3: The absolute value of the bias voltage while serving as the center
4: Serve bias as the center

Pr.03-10 (Analog Frequency Command for Reverse Run)

0: Negative frequency is not valid. Forward and reverse run is controlled by digital keypad or external terminal.
1: Negative frequency is valid. Positive frequency = forward run; negative frequency = reverse run. Direction cannot be switched by digital keypad or external terminal control.

Pr.03-11 Analog Input Gain 1 (AVI1)= 100%

3.

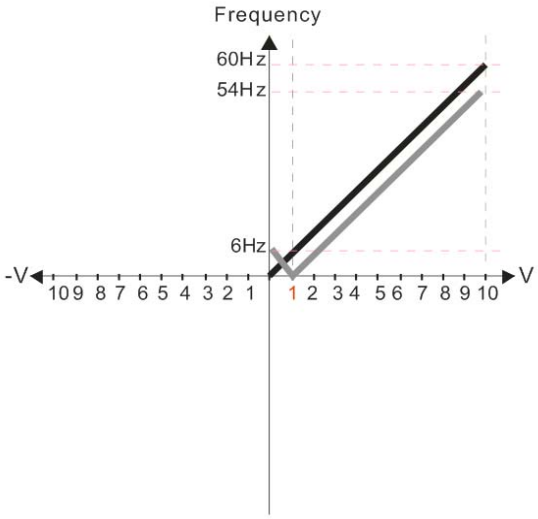


Pr.03-03=10%

Pr.03-07~03-09 (Positive/Negative Bias Mode)

0: No bias
1: Lower than or equal to bias
2: Greater than or equal to bias
3: The absolute value of the bias voltage while serving as the center
4: Serve bias as the center

Pr.03-10 (Analog Frequency Command for Reverse Run)

0: Negative frequency is not valid. Forward and reverse run is controlled by digital keypad or external terminal.
1: Negative frequency is valid. Positive frequency = forward run; negative frequency = reverse run. Direction can not be switched by digital keypad or external terminal control.

Pr.03-11 Analog Input Gain 1(AVI1) = 100%

4.

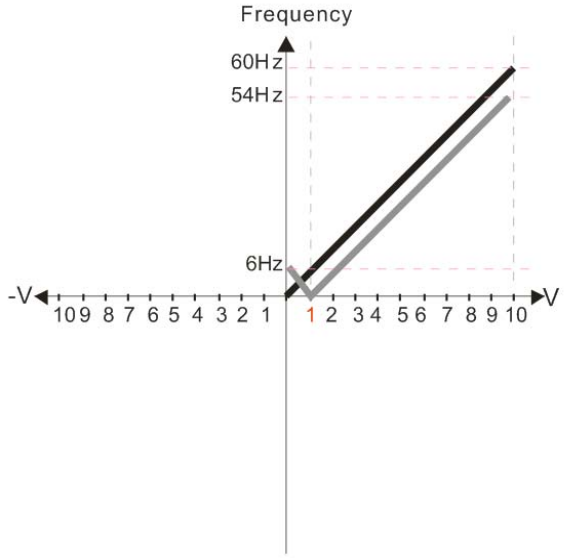


Pr.03-03=10%

Pr.03-07~03-09 (Positive/Negative Bias Mode)

0: No bias
1: Lower than or equal to bias
2: Greater than or equal to bias
3: The absolute value of the bias voltage while serving as the center
4: Serve bias as the center

Pr.03-10 (Analog Frequency Command for Reverse Run)

0: Negative frequency is not valid. Forward and reverse run is controlled by digital keypad or external terminal.
1: Negative frequency is valid. Positive frequency = forward run; negative frequency = reverse run. Direction can not be switched by digital keypad or external terminal control.

Pr.03-11 Analog Input Gain1 (AVI 1) = 100%

5.

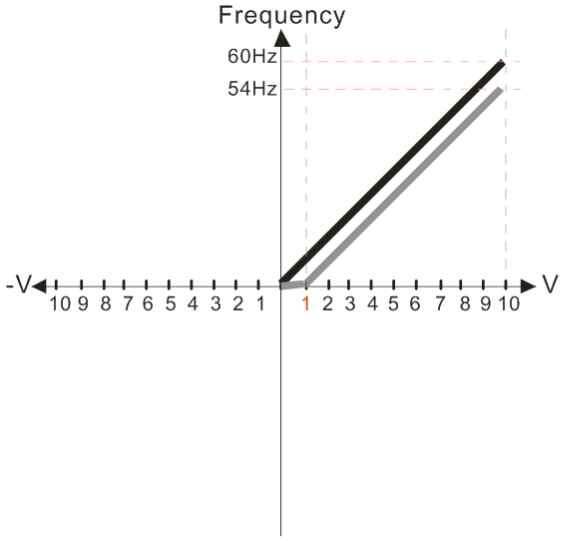


Pr.03-03=10%

Pr.03-07~03-09 (Positive/Negative Bias Mode)

0: No bias
1: Lower than or equal to bias
2: Greater than or equal to bias
3: The absolute value of the bias voltage while serving as the center
4: Serve bias as the center

Pr.03-10 (Analog Frequency Command for Reverse Run)

0: Negative frequency is not valid.
Forward and reverse run is controlled by digital keypad or external terminal.
1: Negative frequency is valid.
Positive frequency = forward run;
negative frequency = reverse run.
Direction can not be switched by digital keypad or external terminal control.

Pr.03-11 Analog Input Gain 1(AVI 1)= 100%

6.

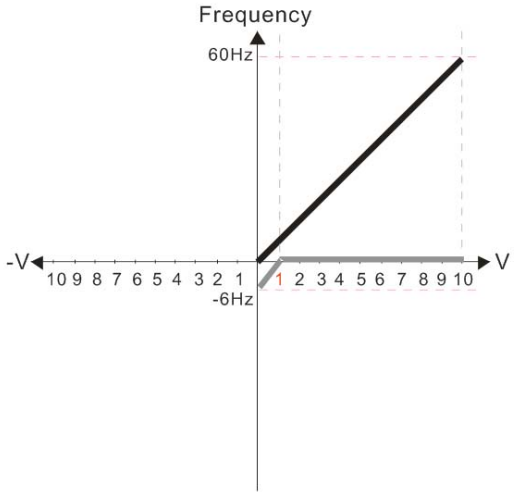


Pr.03-03=10%

Pr.03-07~03-09 (Positive/Negative Bias Mode)

0: No bias
1: Lowerthanorequaltobias
2: Greater than or equal to bias
3: The absolute value of the bias voltage while serving as the center
4: Serve bias as the center

Pr.03-10 (Analog Frequency Command for Reverse Run)

0: Negative frequency is not valid.
Forward and reverse run is controlled by digital keypad or external terminal.
1: Negative frequency is valid.
Positive frequency = forward run;
negative frequency = reverse run.
Directioncan not be switched by digital keypad or external terminal control.

Pr.03-11Analog Input Gain 1(AVI1 )= 100%

7.

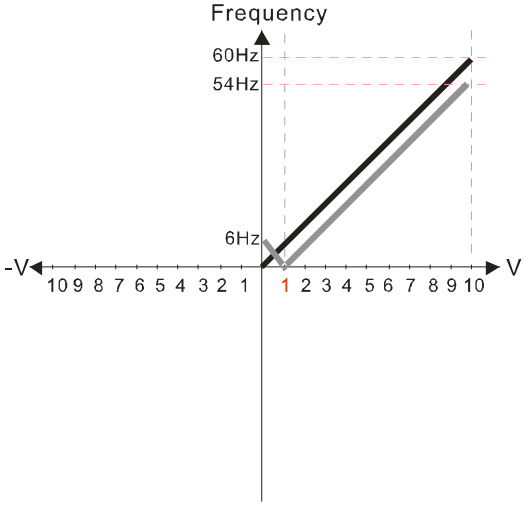


Pr.03-03=10%

Pr.03-07~03-09 (Positive/Negative Bias Mode)

0: No bias
1: Lower than or equal to bias
2: Greater than or equal to bias
3: The absolute value of the bias voltage while serving as the center
4: Serve bias as the center

Pr.03-10 (Analog Frequency Command for Reverse Run)

0: Negative frequency is not valid.
Forward and reverse run is controlled by digital keypad or external terminal.
1: Negative frequency is valid.
Positive frequency = forward run;
negative frequency = reverse run.
Direction can not be switched by digital keypad or external terminal control.

Pr.03-11 Analog Input Gain 1 (AVI 1) = 100%

8.

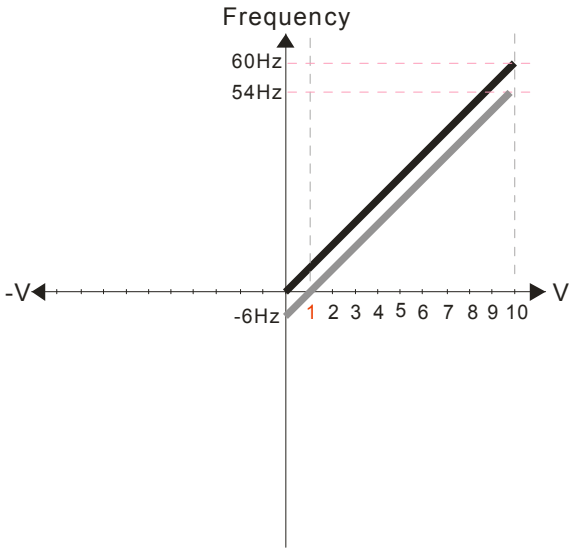


Pr.03-03=10%

Pr.03-07~03-09 (Positive/Negative Bias Mode)

0: No bias
1: Lower than or equal to bias
2: Greater than or equal to bias
3: The absolute value of the bias voltage while serving as the center
4: Serve bias as the center

Pr.03-10 (Analog Frequency Command for Reverse Run)

0: Negative frequency is not valid. Forward and reverse run is controlled by digital keypad or external terminal.
1: Negative frequency is valid. Positive frequency = forward run; negative frequency = reverse run. Direction can not be switched by digital keypad or external terminal control.

Pr.03-11 Analog Input Gain 1(AVI 1 ) = 100%

9.

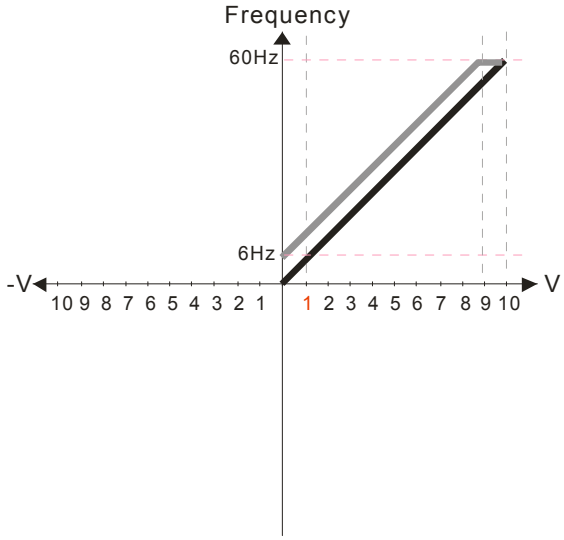


Pr.03-03=-10%

Pr.03-07~03-09 (Positive/Negative Bias Mode)

0: No bias
1: Lower than or equal to bias
2: Greater than or equal to bias
3: The absolute value of the bias voltage while serving as the center
4: Serve bias as the center

Pr.03-10 (Analog Frequency Command for Reverse Run)

0: Negative frequency is not valid. Forward and reverse run is controlled by digital keypad or external terminal.
1: Negative frequency is valid. Positive frequency = forward run; negative frequency = reverse run. Direction can not be switched by digital keypad or external terminal control.

Pr.03-11 Analog Input Gain 1 (AVI 1)= 100%

10.

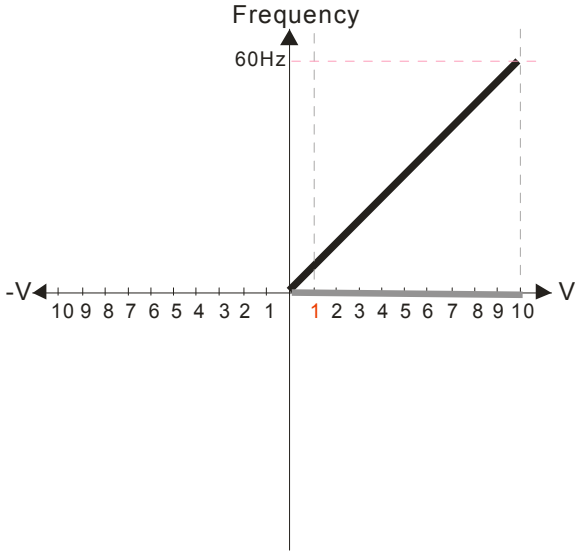


Pr.03-03=-10%

Pr.03-07~03-09 (Positive/Negative Bias Mode)

0: No bias
1: Lower than or equal to bias
2: Greater than or equal to bias
3: The absolute value of the bias voltage while serving as the center
4: Serve bias as the center

Pr.03-10 (Analog Frequency Command for Reverse Run)

0: Negative frequency is not valid. Forward and reverse run is controlled by digital keypad or external terminal.
1: Negative frequency is valid. Positive frequency = forward run; negative frequency = reverse run. Direction can not be switched by digital keypad or external terminal control.

Pr.03-11 Analog Input Gain 1 (AVI 1 )= 100%

11.

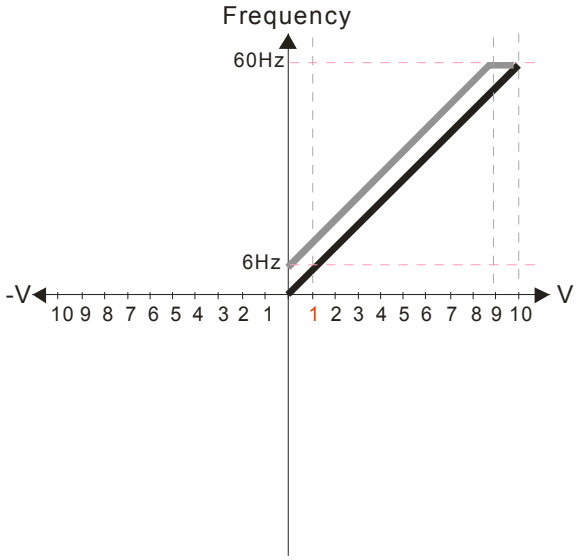


Pr.03-03=-10%

Pr.03-07~03-09 (Positive/Negative Bias Mode)

0: No bias
1: Lower than or equal to bias
2: Greater than or equal to bias
3: The absolute value of the bias voltage while serving as the center
4: Serve bias as the center

Pr.03-10 (Analog Frequency Command for Reverse Run)

0: Negative frequency is not valid.
Forward and reverse run is controlled by digital keypad or external terminal.
1: Negative frequency is valid.
Positive frequency = forward run;
negative frequency = reverse run.
Direction can not be switched by digital keypad or external terminal control.

Pr.03-11 Analog Input Gain 1 (AVI 1 ) = 100%

12.

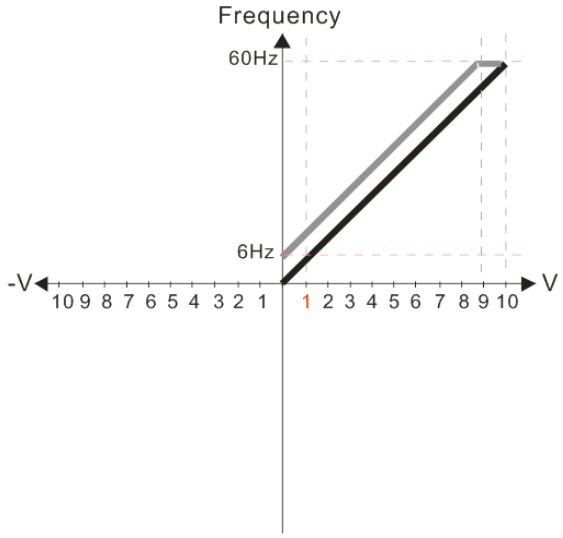


Pr.03-03=-10%

Pr.03-07~03-09 (Positive/Negative Bias Mode)

0: No bias
1: Lower than or equal to bias
2: Greater than or equal to bias
3: The absolute value of the bias voltage while serving as the center
4: Serve bias as the center

Pr.03-10 (Analog Frequency Command for Reverse Run)

0: Negative frequency is not valid.
Forward and reverse run is controlled by digital keypad or external terminal.
1: Negative frequency is valid.
Positive frequency = forward run;
negative frequency = reverse run.
Direction can not be switched by digital keypad or external terminal control.

Pr.03-11 Analog Input Gain 1 (AVI 1 ) = 100%

13.

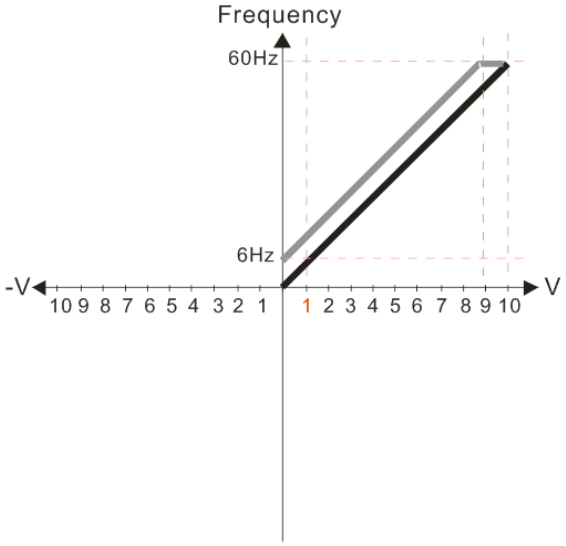


Pr.03-03=-10%

Pr.03-07~03-09 (Positive/Negative Bias Mode)

0: No bias
1: Lower than or equal to bias
2: Greater than or equal to bias
3: The absolute value of the bias voltage while serving as the center
4: Serve bias as the center

Pr.03-10 (Analog Frequency Command for Reverse Run)

0: Negative frequency is not valid.
Forward and reverse run is controlled by digital keypad or external terminal.
1: Negative frequency is valid.
Positive frequency = forward run;
negative frequency = reverse run.
Direction can not be switched by digital keypad or external terminal control.

Pr.03-11 Analog Input Gain 1 (AVI 1 ) = 100%

14.

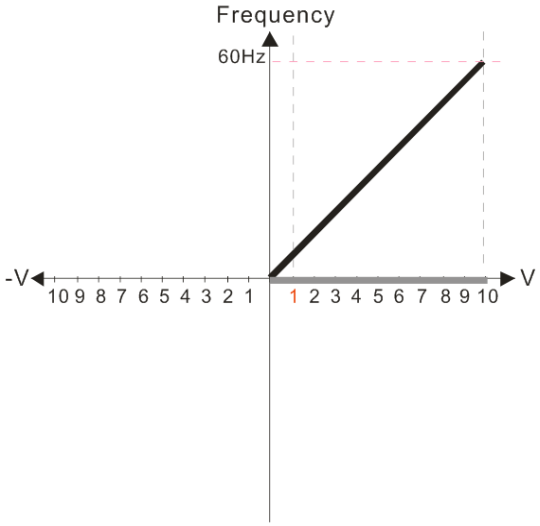


Pr.03-03=-10%

Pr.03-07~03-09 (Positive/Negative Bias Mode)
0: No bias
1: Lower than or equal to bias
2: Greater than or equal to bias
3: The absolute value of the bias voltage while serving as the center
4: Serve bias as the center

Pr.03-10 (Analog Frequency Command for Reverse Run)
0: Negative frequency is not valid. Forward and reverse run is controlled by digital keypad or external terminal.
1: Negative frequency is valid. Positive frequency = forward run; negative frequency = reverse run. Direction can not be switched by digital keypad or external terminal control.

Pr.03-11 Analog Input Gain 1 (AVI1)= 100%

15.

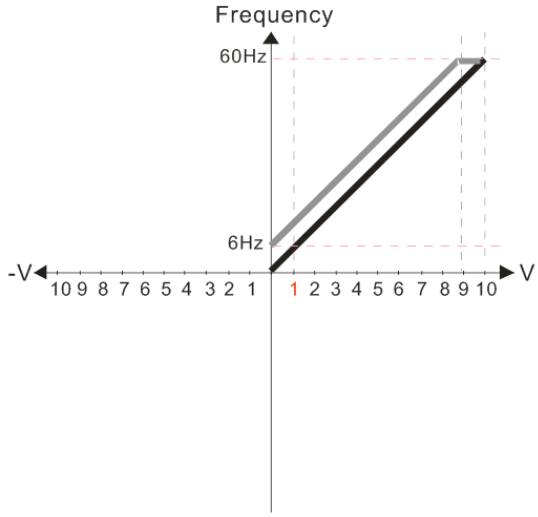


Pr.03-03=-10%

Pr.03-07~03-09 (Positive/Negative Bias Mode)
0: No bias
1: Lower than or equal to bias
2: Greater than or equal to bias
3: The absolute value of the bias voltage while serving as the center
4: Serve bias as the center

Pr.03-10 (Analog Frequency Command for Reverse Run)
0: Negative frequency is not valid. Forward and reverse run is controlled by digital keypad or external terminal.
1: Negative frequency is valid. Positive frequency = forward run; negative frequency = reverse run. Direction can not be switched by digital keypad or external terminal control.

Pr.03-11 Analog Input Gain 1(AVI 1) = 100%

16.

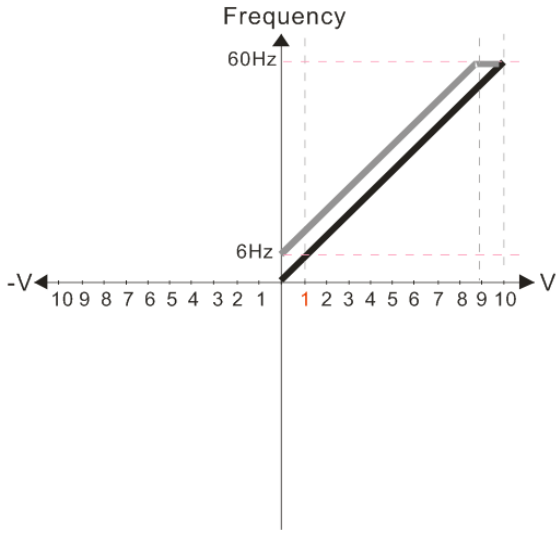


Pr.03-03=-10%

Pr.03-07~03-09 (Positive/Negative Bias Mode)
0: No bias
1: Lower than or equal to bias
2: Greater than or equal to bias
3: The absolute value of the bias voltage while serving as the center
4: Serve bias as the center

Pr.03-10 (Analog Frequency Command for Reverse Run)
0: Negative frequency is not valid. Forward and reverse run is controlled by digital keypad or external terminal.
1: Negative frequency is valid. Positive frequency = forward run; negative frequency = reverse run. Direction can not be switched by digital keypad or external terminal control.

Pr.03-11 Analog Input Gain 1(AVI 1) = 100%

17.

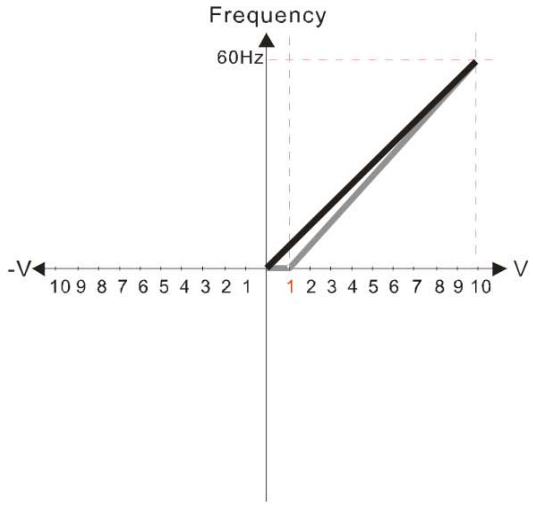


Pr.03-03=-10%

Pr.03-07~03-09 (Positive/Negative Bias Mode)

0: No bias
1: Lower than or equal to bias
2: Greater than or equal to bias
3: The absolute value of the bias voltage while serving as the center
4: Serve bias as the center

Pr.03-10 (Analog Frequency Command for Reverse Run)

0: Negative frequency is not valid. Forward and reverse run is controlled by digital keypad or external terminal.
1: Negative frequency is valid. Positive frequency = forward run; negative frequency = reverse run. Direction can not be switched by digital keypad or external terminal control.

Pr.03-11 Analog Input Gain 1 (AVI 1)= 111.1%

10/9=111.1%

18.

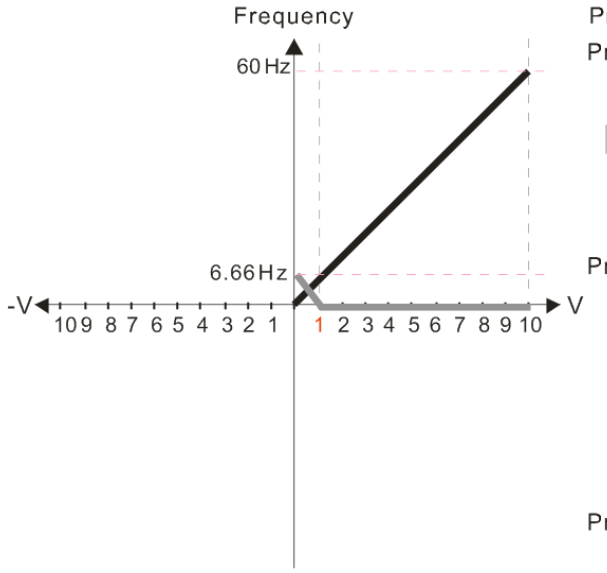


Pr.03-03=10%

Pr.03-07~03-09 (Positive/Negative Bias Mode)

0: No bias
1: Lower than or equal to bias
2: Greater than or equal to bias
3: The absolute value of the bias voltage while serving as the center
4: Serve bias as the center

Pr.03-10 (Analog Frequency Command for Reverse Run)

0: Negative frequency is not valid. Forward and reverse run is controlled by digital keypad or external terminal.
1: Negative frequency is valid. Positive frequency = forward run; negative frequency = reverse run. Direction can not be switched by digital keypad or external terminal control.

Pr.03-11Analog Input Gain 1 (AVI 1)=111.1%

10/9 =111. 1%

19.

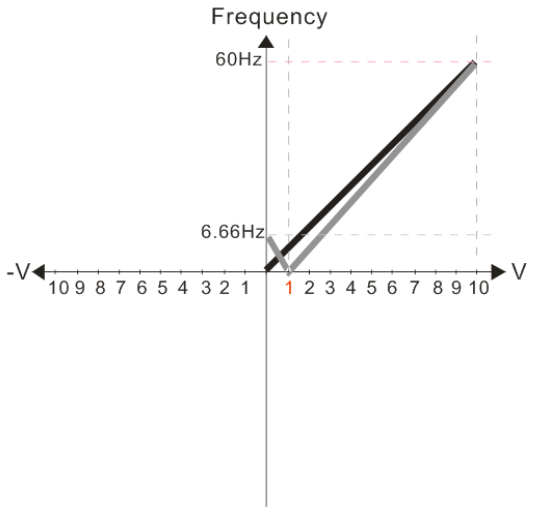


Pr.03-03=10%

Pr.03-07~03-09 (Positive/Negative Bias Mode)

0: No bias
1: Lower than or equal to bias
2: Greater than or equal to bias
3: The absolute value of the bias voltage while serving as the center
4: Serve bias as the center

Pr.03-10 (Analog Frequency Command for Reverse Run)

0: Negative frequency is not valid. Forward and reverse run is controlled by digital keypad or external terminal.
1: Negative frequency is valid. Positive frequency = forward run; negative frequency = reverse run. Direction can not be switched by digital keypad or external terminal control.

Pr.03-11 Analog Input Gain 1(AVI 1 ) = 111.1%

10/9 = 111.1%

20.

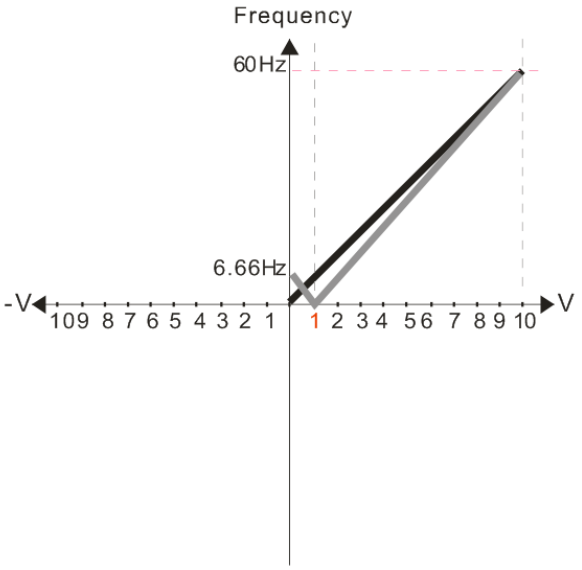


Pr.03-03=10%

Pr.03-07~03-09 (Positive/Negative Bias Mode)

0: No bias
1: Lower than or equal to bias
2: Greater than or equal to bias
3: The absolute value of the bias voltage while serving as the center
4: Serve bias as the center

Pr.03-10 (Analog Frequency Command for Reverse Run)

0: Negative frequency is not valid. Forward and reverse run is controlled by digital keypad or external terminal.
1: Negative frequency is valid. Positive frequency = forward run; negative frequency = reverse run. Direction can not be switched by digital keypad or external terminal control.

Pr.03-11 Analog Input Gain 1 (AVI 1) = 111.1%
10/9 =111. 1%

21.

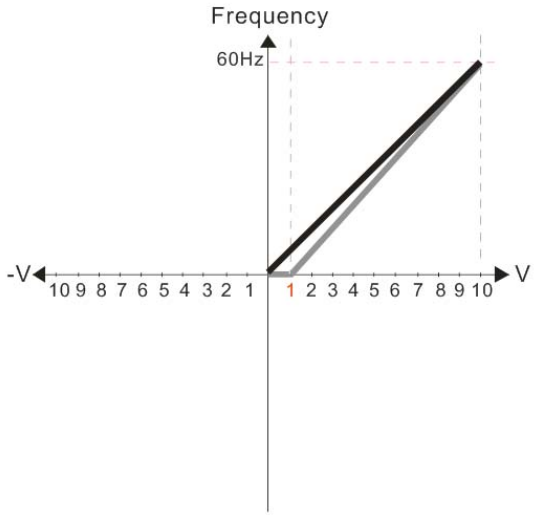


Pr.03-03=10%

Pr.03-07~03-09 (Positive/Negative Bias Mode)

0: No bias
1: Lower than or equal to bias
2: Greater than or equal to bias
3: The absolute value of the bias voltage while serving as the center
4: Serve bias as the center

Pr.03-10 (Analog Frequency Command for Reverse Run)

0: Negative frequency is not valid. Forward and reverse run is controlled by digital keypad or external terminal.
1: Negative frequency is valid. Positive frequency = forward run; negative frequency = reverse run. Direction can not be switched by digital keypad or external terminal control.

Pr03-11 Analog Input Gain 1(AVI 1) = 111.1%
10/9=111. 1%

22.

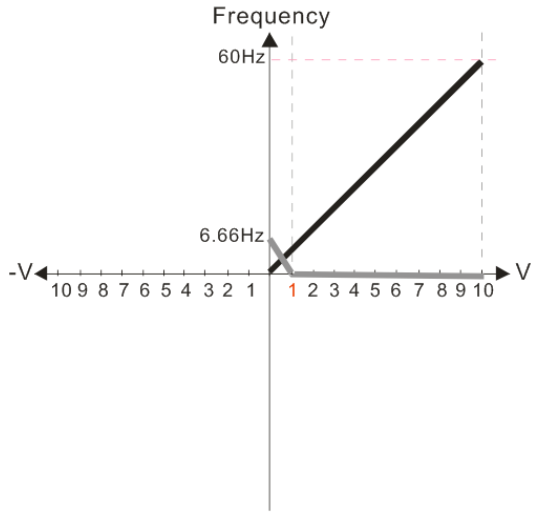


Pr.03-03=10%

Pr.03-07~03-09 (Positive/Negative Bias Mode)

0: No bias
1: Lower than or equal to bias
2: Greater than or equal to bias
3: The absolute value of the bias voltage while serving as the center
4: Serve bias as the center

Pr.03-10 (Analog Frequency Command for Reverse Run)

0: Negative frequency is not valid. Forward and reverse run is controlled by digital keypad or external terminal.
1: Negative frequency is valid. Positive frequency = forward run; negative frequency = reverse run. Direction can not be switched by digital keypad or external terminal control.

Pr03-11 Analog Input Gain1 (AVI 1) = 111.1%
10/9 =111.1 %

23.

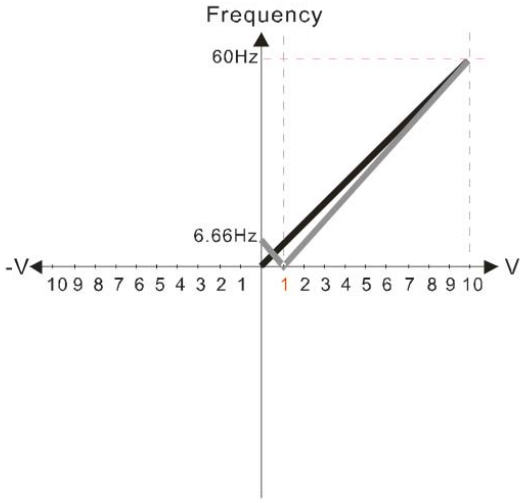


Pr.03-03=10%

Pr.03-07~03-09 (Positive/Negative Bias Mode)

0: No bias
1: Lower than or equal to bias
2: Greater than or equal to bias
3: The absolute value of the bias voltage while serving as the center
4: Serve bias as the center

Pr.03-10 (Analog Frequency Command for Reverse Run)

0: Negative frequency is not valid. Forward and reverse run is controlled by digital keypad or external terminal.
1: Negative frequency is valid. Positive frequency = forward run; negative frequency = reverse run. Direction can not be switched by digital keypad or external terminal control.

Pr03-11 Analog Input Gain 1 (AVI 1) = 111.1%

10/9 =111. 1%

24.

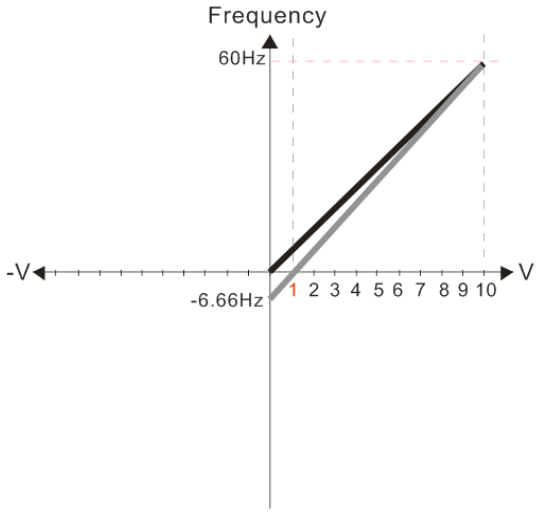


Pr.03-03=10%

Pr.03-07~03-09 (Positive/Negative Bias Mode)

0: No bias
1: Lower than or equal to bias
2: Greater than or equal to bias
3: The absolute value of the bias voltage while serving as the center
4: Serve bias as the center

Pr.03-10 (Analog Frequency Command for Reverse Run)

0: Negative frequency is not valid. Forward and reverse run is controlled by digital keypad or external terminal.
1: Negative frequency is valid. Positive frequency = forward run; negative frequency = reverse run. Direction can not be switched by digital keypad or external terminal control.

Pr03-11 Analog Input Gain 1 (AVI 1) = 111.1%

10/ 9 = 111.1%

25.

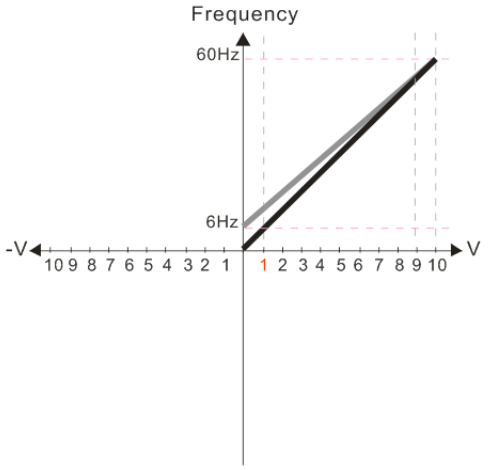


Pr.03-07~03-09 (Positive/Negative Bias Mode)

0: No bias
1: Lower than or equal to bias
2: Greater than or equal to bias
3: The absolute value of the bias voltage while serving as the center
4: Serve bias as the center

Pr.03-10 (Analog Frequency Command for Reverse Run)

0: Negative frequency is not valid. Forward and reverse run is controlled by digital keypad or external terminal.
1: Neagtive frequency is valid. Positive frequency = forward run; negative frequency = reverse run. Direction can not be switched by digital keypad or external teriminal control.

Calculate the bias: $\frac{60\text{-}6\text{Hz}}{10\text{V}} = \frac{6\text{-}0\text{Hz}}{(0\text{-}XV)}$ $XV = \frac{10}{-9} = -1.11\text{V}$

$\therefore$ Pr.03-03= $\frac{-1.11}{10} \times 100\% = -11.1\%$

Calculate the gain: Pr.03-11= $\frac{10\text{V}}{11.1\text{V}} \times 100\% = 90.0\%$

26.

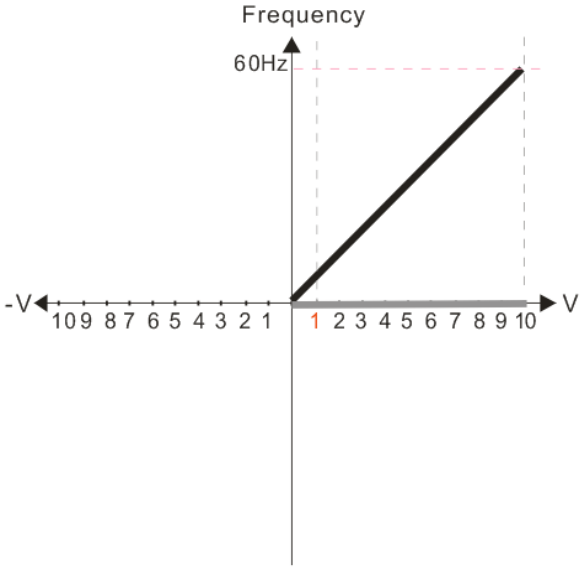


Pr.03-07~03-09 (Positive/Negative Bias Mode)

0: No bias
1: Lower than or equal to bias
2: Greater than or equal to bias
3: The absolute value of the bias voltage while serving as the center
4: Serve bias as the center

Pr.03-10 (Analog Frequency Command for Reverse Run)

0: Negative frequency is not valid. Forward and reverse run is controlled by digital keypad or external terminal.
1: Neagtive frequency is valid. Positive frequency = forward run; negative frequency = reverse run. Direction can not be switched by digital keypad or external teriminal control.

27.

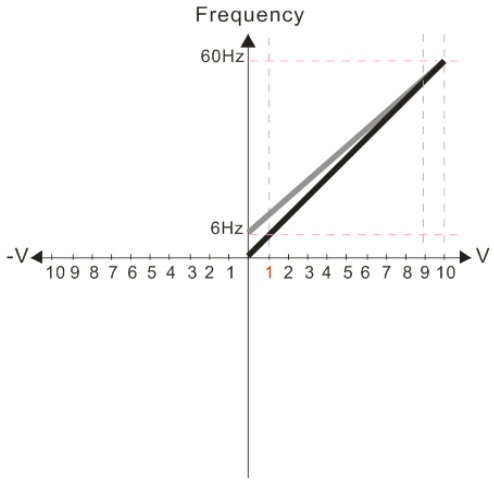


Pr.03-07~03-09 (Positive/Negative Bias Mode)

0: No bias
1: Lower than or equal to bias
2: Greater than or equal to bias
3: The absolute value of the bias voltage while serving as the center
4: Serve bias as the center

Pr.03-10 (Analog Frequency Command for Reverse Run)

0: Negative frequency is not valid. Forward and reverse run is controlled by digital keypad or external terminal.
1: Neagtive frequency is valid. Positive frequency = forward run; negative frequency = reverse run. Direction can not be switched by digital keypad or external teriminal control.

Calculate the bias: $\frac{60\text{-}6Hz}{10V} = \frac{6\text{-}0Hz}{(0\text{-}XV)}$ $XV = \frac{10}{-9} = -1.11V$

$\therefore$ Pr.03-03 $= \frac{-1.11}{10} \times 100\% = -11.1\%$

Calculate the gain: Pr.03-11 $= \frac{10V}{11.1V} \times 100\% = 90.0\%$

28.

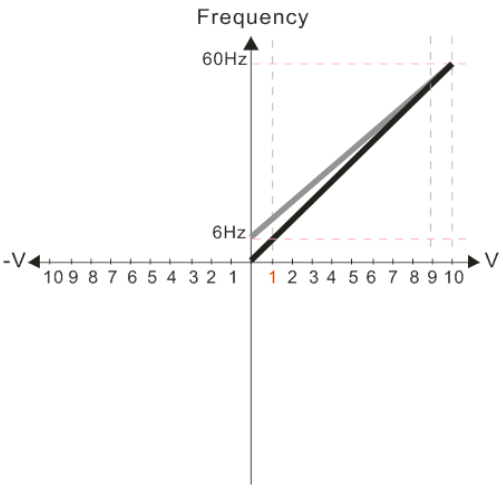


Pr.03-07~03-09 (Positive/Negative Bias Mode)

0: No bias
1: Lower than or equal to bias
2: Greater than or equal to bias
3: The absolute value of the bias voltage while serving as the center
4: Serve bias as the center

Pr.03-10 (Analog Frequency Command for Reverse Run)

0: Negative frequency is not valid. Forward and reverse run is controlled by digital keypad or external terminal.
1: Neagtive frequency is valid. Positive frequency = forward run; negative frequency = reverse run. Direction can not be switched by digital keypad or external teriminal control.

Calculate the bias: $\frac{60\text{-}6Hz}{10V} = \frac{6\text{-}0Hz}{(0\text{-}XV)}$ $XV = \frac{10}{-9} = -1.11V$

$\therefore$ Pr.03-03 $= \frac{-1.11}{10} \times 100\% = -11.1\%$

Calculate the gain: Pr.03-11 $= \frac{10V}{11.1V} \times 100\% = 90.0\%$

29.

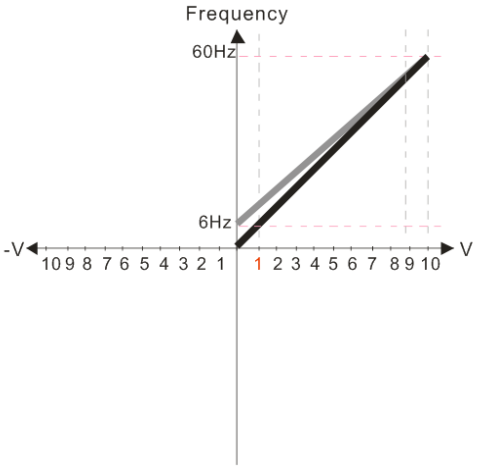


Pr.03-07~03-09 (Positive/Negative Bias Mode)
0: No bias
1: Lowerthanorequaltobias
2: Greater than or equal to bias
3: The absolute value of the bias voltage while serving as the center
4: Serve bias as the center

Pr.03-10 (Analog Frequency Command for Reverse Run)
0: Negative frequency is not valid.
Forward and reverse run is controlled by digital keypad or external terminal.
1: Negative frequency is valid.
Positive frequency = forward run;
negative frequency = reverse run.
Direction can not be switched by digital keypad or external terminal control.

Calculate the bias: $\frac{60\text{-}6Hz}{10V} = \frac{6\text{-}0Hz}{(0\text{-}XV)}$ $XV = \frac{10}{-9} = -1.11V$

$\therefore$ Pr.03-03 $= \frac{-1.11}{10} \times 100\% = -11.1\%$

Calculate the gain: Pr.03-11 $= \frac{10V}{11.1V} \times 100\% = 90.0\%$

30.

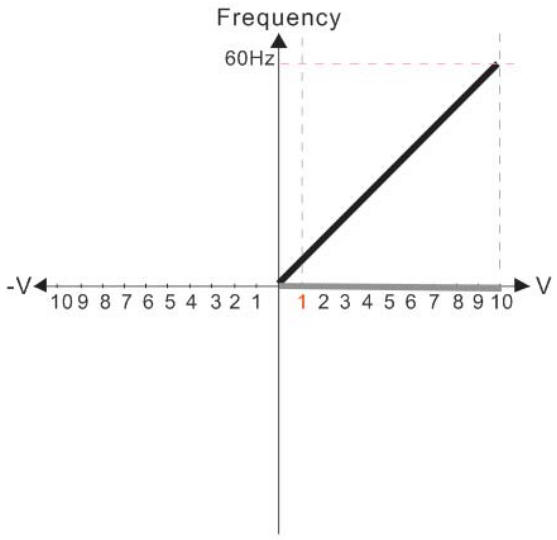


Pr.03-07~03-09 (Positive/Negative Bias Mode)
0: No bias
1: Lower than or equal to bias
2: Greater than or equal to bias
3: The absolute value of the bias voltage while serving as the center
4: Serve bias as the center

Pr.03-10 (Analog Frequency Command for Reverse Run)
0: Negative frequency is not valid.
Forward and reverse run is controlled by digital keypad or external terminal.
1: Negative frequency is valid.
Positive frequency = forward run;
negative frequency = reverse run.
Direction can not be switched by digital keypad or external terminal control.

31.

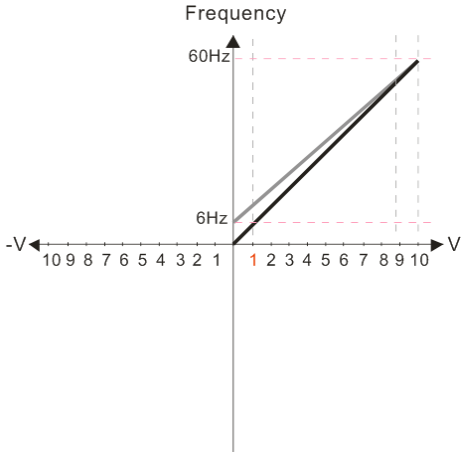


Pr.03-07~03-09 (Positive/Negative Bias Mode)
0: No bias
1: Lower than or equal to bias
2: Greater than or equal to bias
3: The absolute value of the bias voltage while serving as the center
4: Serve bias as the center

Pr.03-10 (Analog Frequency Command for Reverse Run)
0: Negative frequency is not valid.
Forward and reverse run is controlled by digital keypad or external terminal.
1: Neagative frequency is valid.
Positive frequency = forward run;
negative frequency = reverse run.
Direction can not be switched by digital keypad or external terminal control.

Calculate the bias: $\frac{60\text{-}6Hz}{10V} = \frac{6\text{-}0Hz}{(0\text{-}XV)}$ $XV = \frac{10}{-9} = -1.11V$

$\therefore$ Pr.03-03 $= \frac{-1.11}{10} \times 100\% = -11.1\%$

Calculate the gain: Pr.03-11 $= \frac{10V}{11.1V} \times 100\% = 90.0\%$

32.

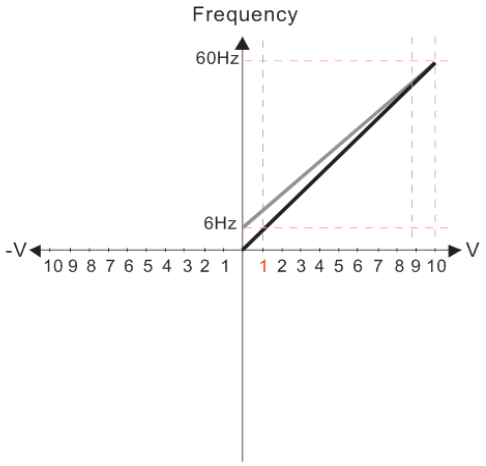


Pr.03-07~03-09 (Positive/Negative Bias Mode)

0: No bias
1: Lower than or equal to bias
2: Greater than or equal to bias
3: The absolute value of the bias voltage while serving as the center
4: Serve bias as the center

Pr.03-10 (Analog Frequency Command for Reverse Run)

0: Negative frequency is not valid. Forward and reverse run is controlled by digital keypad or external terminal.
1: Neagative frequency is valid. Positive frequency = forward run; negative frequency = reverse run. Direction can not be switched by digital keypad or external terminal control.

Calculate the bias: $\frac{60\text{-}6Hz}{10V} = \frac{6\text{-}0Hz}{(0\text{-}XV)}$ $XV = \frac{10}{-9} = -1.11V$

$\therefore$ Pr.03-03= $\frac{-1.11}{10} \times 100\% = -11.1\%$

Calculate the gain: Pr.03-11= $\frac{10V}{11.1V} \times 100\% = 90.0\%$

33.

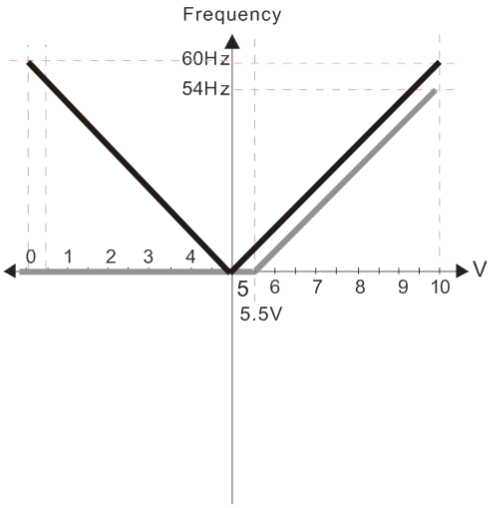


Pr.00-21=0 (Dgital keypad control and d run in FWD direction)

Pr.03-05 Analog Positive Voltage Input Bias (AVI2) =10%

Pr.03-07~03-09 (Positive/Negative Bias Mode)

0: No bias
1: Lower than or equal to bias
2: Greater than or equal to bias
3: The absolute value of the bias voltage while serving as the center
4: Serve bias as the center

Pr.03-10 (Analog Frequency Command for Reverse Run)

0: Negative frequency is not valid. Forward and reverse run is controlled by digital keypad or external terminal.
1: Negative frequency is valid. Positive frequency forward run; negative frequency reverse run Direction cannot be switched by digital keypad or external terminal control

Pr.03-13 Analog Input Gain 3 (AVI2)= 100%

Pr.03-14 Analog Input Gain 4 (AVI2)= 100%

34.

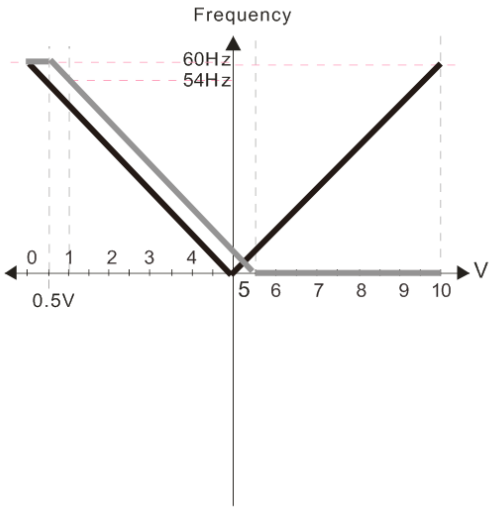


Pr.00-21=0 (Dgital keypad control and d run in FWD direction)

Pr.03-05 Analog Positive Voltage Input Bias (AVI2) =10%

Pr.03-07~03-09 (Positive/Negative Bias Mode)

0: No bias
1: Lower than or equal to bias
2: Greater than or equal to bias
3: The absolute value of the bias voltage while serving as the center
4: Serve bias as the center

Pr.03-10 (Analog Frequency Command for Reverse Run)

0: Negative frequency is not valid. Forward and reverse run is controlled by digital keypad or external terminal.
1: Negative frequency is valid. Positive frequency forward run; negative frequency reverse run Direction cannot be switched by digital keypad or external terminal control

Pr.03-13 Analog Input Gain 3 (AVI2)= 100%

Pr.03-14 Analog Input Gain 4 (AVI2)= 100%

35.

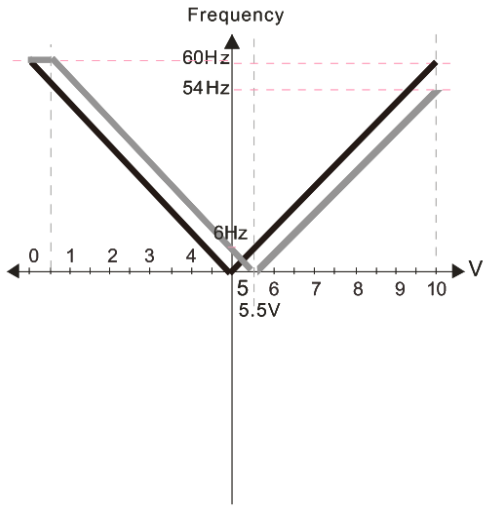


Pr.00-21=0 (Dgital keypad control and d run in FWD direction)
Pr.03-05 Analog Positive Voltage Input Bias (AVI2) =10%

Pr.03-07~03-09 (Positive/Negative Bias Mode)
0: No bias
1: Lower than or equal to bias
2: Greater than or equal to bias
3: The absolute value of the bias voltage while serving as the center
4: Serve bias as the center

Pr.03-10 (Analog Frequency Command for Reverse Run)
0: Negative frequency is not valid. Forward and reverse run is controlled by digital keypad or external terminal.
1: Negative frequency is valid. Positive frequency forward run; negative frequency reverse run Direction cannot be switched by digital keypad or external terminal control

Pr.03-13 Analog Input Gain 3 (AVI2)= 100%
Pr.03-14 Analog Input Gain 4 (AVI2)= 100%

36.

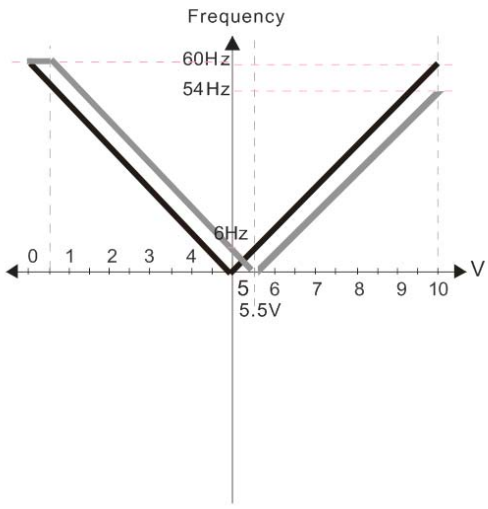


Pr.00-21=0 (Dgital keypad control and d run in FWD direction)
Pr.03-05 Analog Positive Voltage Input Bias (AVI2) =10%

Pr.03-07~03-09 (Positive/Negative Bias Mode)
0: No bias
1: Lower than or equal to bias
2: Greater than or equal to bias
3: The absolute value of the bias voltage while serving as the center
4: Serve bias as the center

Pr.03-10 (Analog Frequency Command for Reverse Run)
0: Negative frequency is not valid. Forward and reverse run is controlled by digital keypad or external terminal.
1: Negative frequency is valid. Positive frequency forward run; negative frequency reverse run Direction cannot be switched by digital keypad or external terminal control

Pr.03-13 Analog Input Gain 3 (AVI2)= 100%
Pr.03-14 Analog Input Gain 4 (AVI2)= 100%

37.

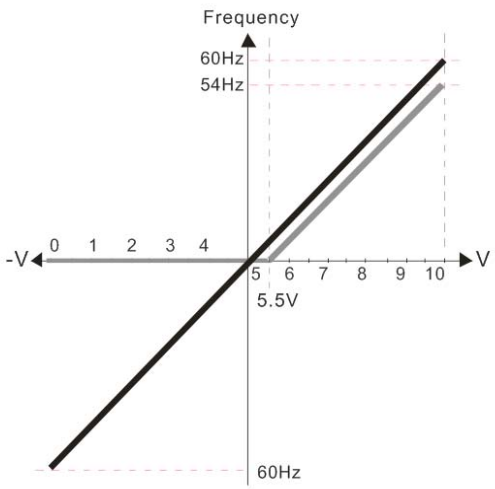


Pr.00-21=0 (Dgital keypad control and d run in FWD direction)
Pr.03-05 Analog Positive Voltage Input Bias (AVI2) =10%

Pr.03-07~03-09 (Positive/Negative Bias Mode)
0: No bias
1: Lower than or equal to bias
2: Greater than or equal to bias
3: The absolute value of the bias voltage while serving as the center
4: Serve bias as the center

Pr.03-10 (Analog Frequency Command for Reverse Run)
0: Negative frequency is not valid. Forward and reverse run is controlled by digital keypad or external terminal.
1: Negative frequency is valid. Positive frequency forward run; negative frequency reverse run Direction cannot be switched by digital keypad or external terminal control

Pr.03-13 Analog Input Gain 3 (AVI2)= 100%
Pr.03-14 Analog Input Gain 4 (AVI2)= 100%

38.

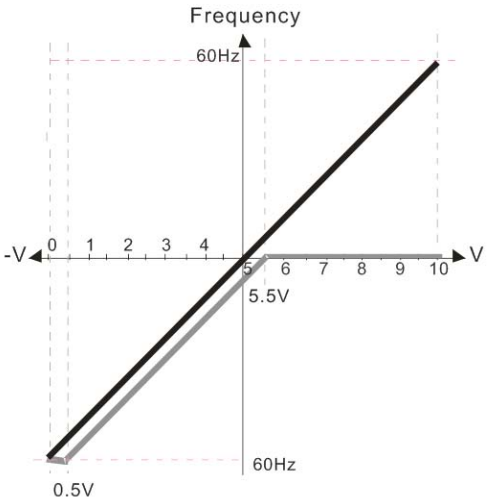


Pr.00-21=0 (Digital keypad control and run in FWD direction)
Pr.03-05 Analog Positive Voltage Input Bias (AVI2) = 10%
Pr.03-07~03-09 (Positive/Negative Bias Mode)
0: No bias
1: Lower than or equal to bias
2: Greater than or equal to bias
3: The absolute value of the bias voltage while serving as the center
4: Serve bias as the center

Pr.03-10 (Analog Frequency Command for Reverse Run)
0: Negative frequency is not valid. Forward and reverse run is controlled by digital keypad or external terminal.
1: Negative frequency is valid. Positive frequency = forward run; negative frequency = reverse run. Direction can not be switched by digital keypad or external terminal control.

Pr.03-13 Analog Input Gain 3 (AVI2)= 100%
Pr.03-14 Analog Input Gain 4 (AVI2)= 100%

39.

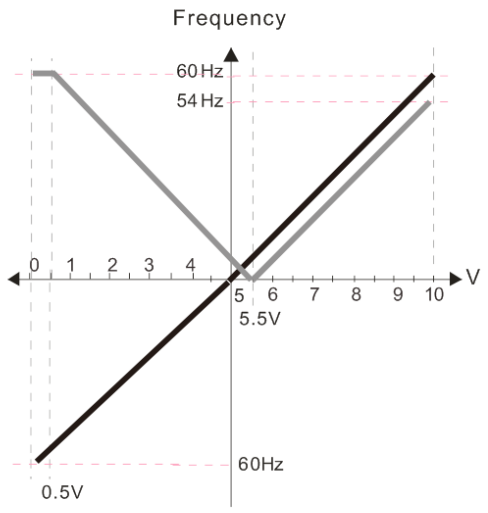


Pr.00-21=0 (Digital keypad control and run in FWD direction)
Pr.03-05 Analog Positive Voltage Input Bias (AVI2) = 10%
Pr.03-07~03-09 (Positive/Negative Bias Mode)
0: No bias
1: Lower than or equal to bias
2: Greater than or equal to bias
3: The absolute value of the bias voltage while serving as the center
4: Serve bias as the center

Pr.03-10 (Analog Frequency Command for Reverse Run)
0: Negative frequency is not valid. Forward and reverse run is controlled by digital keypad or external terminal.
1: Negative frequency is valid. Positive frequency = forward run; negative frequency = reverse run. Direction can not be switched by digital keypad or external terminal control.

Pr.03-13 Analog Input Gain 3 (AVI2)= 100%
Pr.03-14 Analog Input Gain 4 (AVI2)= 100%

40.

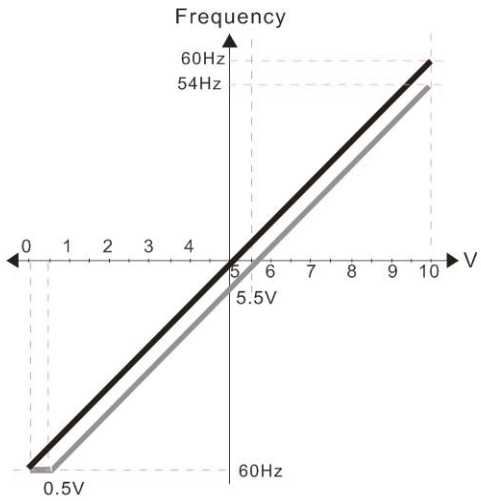


Pr.00-21=0 (Digital keypad control and run in FWD direction)
Pr.03-05 Analog Positive Voltage Input Bias (AVI2) = 10%
Pr.03-07~03-09 (Positive/Negative Bias Mode)
0: No bias
1: Lower than or equal to bias
2: Greater than or equal to bias
3: The absolute value of the bias voltage while serving as the center
4: Serve bias as the center

Pr.03-10 (Analog Frequency Command for Reverse Run)
0: Negative frequency is not valid. Forward and reverse run is controlled by digital keypad or external terminal.
1: Negative frequency is valid. Positive frequency = forward run; negative frequency = reverse run. Direction can not be switched by digital keypad or external terminal control.

Pr.03-13 Analog Input Gain 3 (AVI2)= 100%
Pr.03-14 Analog Input Gain 4 (AVI2)= 100%

41.

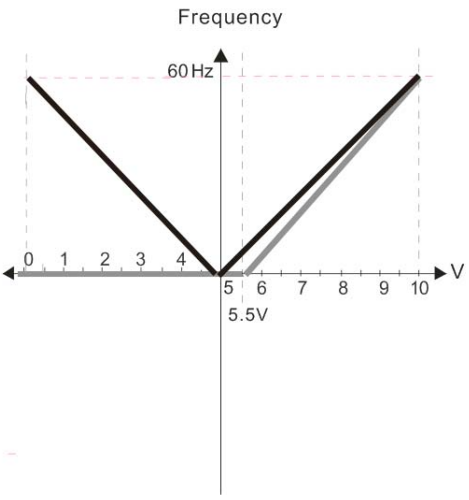


Pr.00-21=0 (Digital keypad control and run in FWD direction)
Pr.03-05 Analog Positive Voltage Input Bias (AVI2) = 10%
Pr.03-07~03-09 (Positive/Negative Bias Mode)
0: No bias
1: Lower than or equal to bias
2: Greater than or equal to bias
3: The absolute value of the bias voltage while serving as the center
4: Serve bias as the center

Pr.03-10 (Analog Frequency Command for Reverse Run)
0: Negative frequency is not valid. Forward and reverse run is controlled by digital keypad or external terminal.
1: Negative frequency is valid. Positive frequency = forward run; negative frequency = reverse run. Direction can not be switched by digital keypad or external terminal control.

Pr.03-13 Analog Input Gain 3 (AVI2)= 111.1%
(10/9)*100%= 111.1%
Pr.03-14 Analog Input Gain 4 (AVI2) = 111.1%

42.

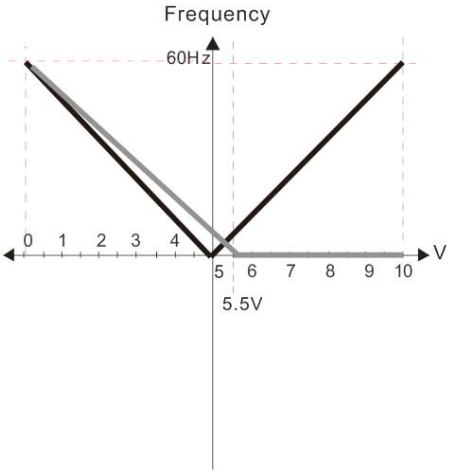


Pr.00-21=0 (Digital keypad control and run in FWD direction)
Pr.03-05 Analog Positive Voltage Input Bias (AVI2) = 10%
Pr.03-07~03-09 (Positive/Negative Bias Mode)
0: No bias
1: Lower than or equal to bias
2: Greater than or equal to bias
3: The absolute value of the bias voltage while serving as the center
4: Serve bias as the center

Pr.03-10 (Analog Frequency Command for Reverse Run)
0: Negative frequency is not valid. Forward and reverse run is controlled by digital keypad or external terminal.
1: Negative frequency is valid. Positive frequency = forward run; negative frequency = reverse run. Direction can not be switched by digital keypad or external terminal control.

Pr.03-13 Analog Input Gain 3 (AVI2)= 100%
Pr.03-14 Analog Input Gain 4 (AVI2) = 90.9%
(10/11)*100% = 90.9%

43.

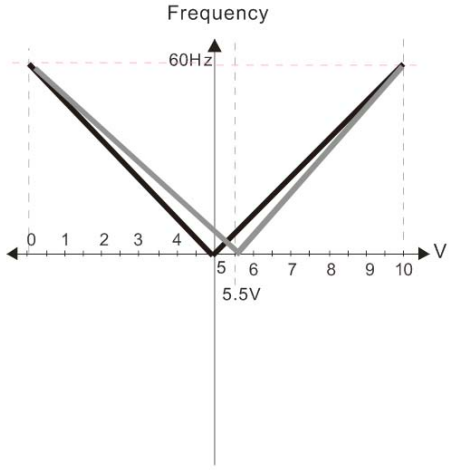


Pr.00-21=0 (Digital keypad control and run in FWD direction)
Pr.03-05 Analog Positive Voltage Input Bias (AVI2) = 10%
Pr.03-07~03-09 (Positive/Negative Bias Mode)
0: No bias
1: Lower than or equal to bias
2: Greater than or equal to bias
3: The absolute value of the bias voltage while serving as the center
4: Serve bias as the center

Pr.03-10 (Analog Frequency Command for Reverse Run)
0: Negative frequency is not valid. Forward and reverse run is controlled by digital keypad or external terminal.
1: Negative frequency is valid. Positive frequency = forward run; negative frequency = reverse run. Direction can not be switched by digital keypad or external terminal control.

Pr.03-13 Analog Input Gain 3 (AVI2)= 111.1%
(10/9)*100%= 111.1%
Pr.03-14 Analog Input Gain 4 (AVI2) = 90.9%
(10/11)*100% = 90.9%

44.

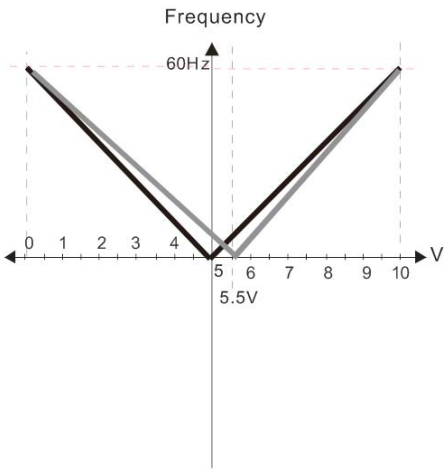


Pr.00-21=0 (Digital keypad control and run in FWD direction)
Pr.03-05 Analog Positive Voltage Input Bias (AVI2) = 10%
Pr.03-07~03-09 (Positive/Negative Bias Mode)
0: No bias
1: Lower than or equal to bias
2: Greater than or equal to bias
3: The absolute value of the bias voltage while serving as the center
4: Serve bias as the center

Pr.03-10 (Analog Frequency Command for Reverse Run)
0: Negative frequency is not valid. Forward and reverse run is controlled by digital keypad or external terminal.
1: Negative frequency is valid. Positive frequency = forward run; negative frequency = reverse run. Direction can not be switched by digital keypad or external terminal control.

Pr.03-13 Analog Input Gain 3 (AVI2)= 111.1%
(10/9)*100%= 111.1%
Pr.03-14 Analog Input Gain 4 (AVI2) = 90.9%
(10/11)*100% = 90.9%

45.

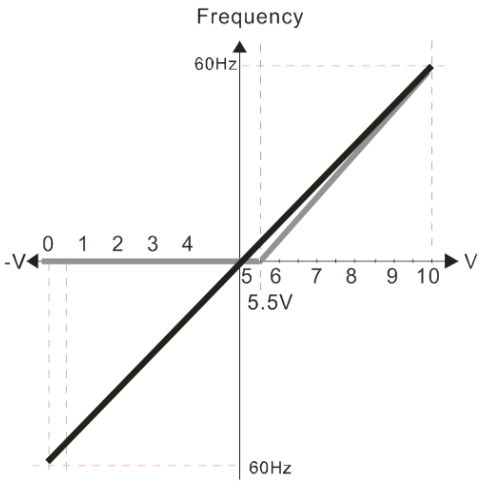


Pr.00-21=0 (Digital keypad control and run in FWD direction)
Pr.03-05 Analog Positive Voltage Input Bias (AVI2) = 10%
Pr.03-07~03-09 (Positive/Negative Bias Mode)
0: No bias
1: Lower than or equal to bias
2: Greater than or equal to bias
3: The absolute value of the bias voltage while serving as the center
4: Serve bias as the center

Pr.03-10 (Analog Frequency Command for Reverse Run)
0: Negative frequency is not valid. Forward and reverse run is controlled by digital keypad or external terminal.
1: Negative frequency is valid. Positive frequency = forward run; negative frequency = reverse run. Direction can not be switched by digital keypad or external terminal control.

Pr.03-13 Analog Input Gain 3 (AVI2)= 111.1%
(10/9)*100%= 111.1%
Pr.03-14 Analog Input Gain 4 (AVI2) = 100%

46.

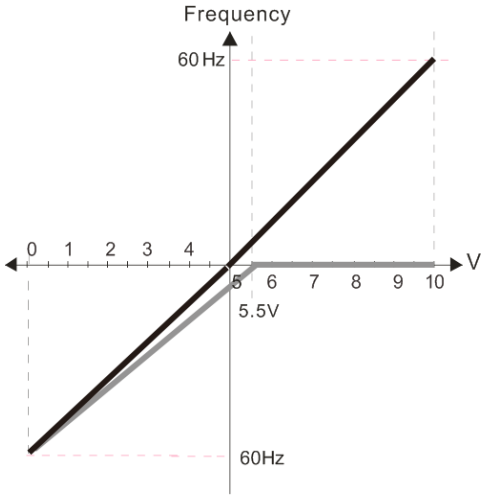


Pr.00-21=0 (Digital keypad control and run in FWD direction)
Pr.03-05 Analog Positive Voltage Input Bias (AVI2) = 10%
Pr.03-07~03-09 (Positive/Negative Bias Mode)
0: No bias
1: Lower than or equal to bias
2: Greater than or equal to bias
3: The absolute value of the bias voltage while serving as the center
4: Serve bias as the center

Pr.03-10 (Analog Frequency Command for Reverse Run)
0: Negative frequency is not valid. Forward and reverse run is controlled by digital keypad or external terminal.
1: Negative frequency is valid. Positive frequency = forward run; negative frequency = reverse run. Direction can not be switched by digital keypad or external terminal control.

Pr.03-13 Analog Input Gain 3 (AVI2)= 100%
Pr.03-14 Analog Input Gain 4 (AVI2) = 90.9%
(10/11)*100% = 90.9%

47.

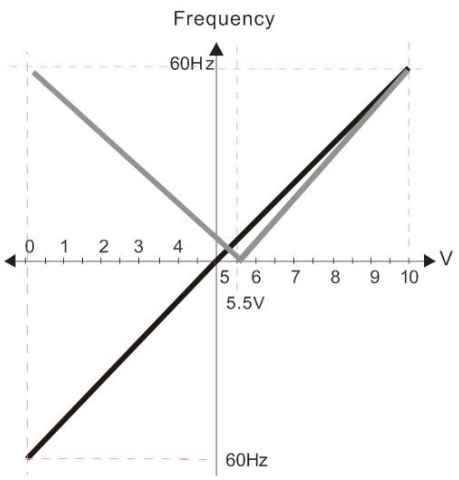


Pr.00-21=0 (Digital keypad control and run in FWD direction)
Pr.03-05 Analog Positive Voltage Input Bias (AVI2) = 10%
Pr.03-07~03-09 (Positive/Negative Bias Mode)
0: No bias
1: Lower than or equal to bias
2: Greater than or equal to bias
3: The absolute value of the bias voltage while serving as the center
4: Serve bias as the center

Pr.03-10 (Analog Frequency Command for Reverse Run)
0: Negative frequency is not valid. Forward and reverse run is controlled by digital keypad or external terminal.
1: Negative frequency is valid. Positive frequency = forward run; negative frequency = reverse run. Direction can not be switched by digital keypad or external terminal control.

Pr.03-13 Analog Input Gain 3 (AVI2)= 111.1%
(10/9)*100%=111.1%
Pr.03-14 Analog Input Gain 4 (AVI2) = 90.9%
(10/11)*100%=90.9%

48.

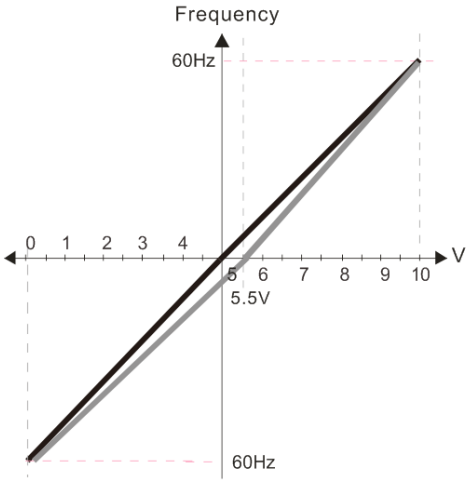


Pr.00-21=0 (Digital keypad control and run in FWD direction)
Pr.03-05 Analog Positive Voltage Input Bias (AVI2) = 10%
Pr.03-07~03-09 (Positive/Negative Bias Mode)
0: No bias
1: Lower than or equal to bias
2: Greater than or equal to bias
3: The absolute value of the bias voltage while serving as the center
4: Serve bias as the center

Pr.03-10 (Analog Frequency Command for Reverse Run)
0: Negative frequency is not valid. Forward and reverse run is controlled by digital keypad or external terminal.
1: Negative frequency is valid. Positive frequency = forward run; negative frequency = reverse run. Direction can not be switched by digital keypad or external terminal control.

Pr.03-13 Analog Input Gain 3 (AVI2)= 111.1%
(10/9)*100%=111.1%
Pr.03-14 Analog Input Gain 4 (AVI2) = 90.9%
(10/11)*100%=90.9%

| | |
|---|---|
| 03-11 | Analog Input Gain (AVI1) |
| 03-12 | Analog Input Gain (ACI) |
| 03-13 | Analog Positive Input Gain (AVI2) |
| 03-14 | Analog Negative Input Gain (AVI2) |

Factory Setting: 100.0

Settings -500.0~500.0%

📖 Parameters 03-03 to 03-14 are used when the source of frequency command is the analog voltage/current signal.

| | |
|---|---|
| 03-15 | Analog Input Filter Time (AVI1) |
| 03-16 | Analog Input Filter Time (ACI) |
| 03-17 | Analog Input Filter Time (AVI2) |

Factory Setting: 0.01

Settings 0.00~20.00 sec

📖 These input delays can be used to filter noisy analog signal.

- When the setting of the time constant is too large, the control will be stable but the control response will be slow. When the setting of time constant is too small, the control response will be faster but the control may be unstable. To find the optimal setting, please adjust the setting according to the control stable or response status.

## 03-18 Addition Function of the Analog Input

Factory Setting: 0

Settings 0: Disable (AVI1, ACI, AVI2)
1: Enable

- When Pr03-18 is set to 1:

  EX1: Pr03-00=Pr03-01=1 Frequency command= AVI1+ACI

  EX2: Pr03-00=Pr03-01=Pr03-02=1 Frequency command = AVI1+ACI+AVI2

  EX3: Pr03-00=Pr03-02=1 Frequency command = AVI1+AVI2

  EX4: Pr03-01=Pr03-02=1 Frequency command = ACI+AVI2

- When Pr.03-18 is set to 0 and the analog input setting is the same, the priority for AVI1, ACI and AVI2 are AVI1>ACI>AVI2.

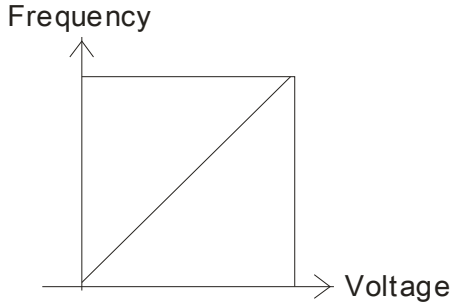


$$\text{Fcommand}=[(\text{ay}-\text{bias})*\text{gain}]*\frac{\text{Fmax}(01\text{-}00)}{10\text{V or }16\text{mA or }20\text{mA}}$$

Fcommand: the corresponding frequency for 10V or 20mA
ay : 0-10V, 4-20mA, 0-20mA
bias : Pr.03-03, Pr. 03-04, Pr.03-05
gain : Pr.03-11, Pr.03-12, Pr.03-13, Pr.03-14

## 03-19 Treatment to 4-20mA Analog Input Signal Loss

Factory Setting: 0

Settings 0: Disable
1: Continue operation at the last frequency
2: Decelerate to stop
3: Stop immediately and display ACE

- This parameter determines the behavior when 4~20mA signal is loss, when AVIc(Pr.03-28=2) or ACIc (03-29=0).
- When Pr.03-28 is not set to 2, it means the voltage input to AVI terminal is 0-10V or 0-20mA. At this moment, Pr.03-19 will be invalid.
- When Pr.03-29 is set to 1, it means the voltage input to ACI terminal is for 0-10V. At this moment, Pr.03-19 will be invalid.
- When setting is 1 or 2, it will display warning code “ANL” on the keypad. It will be blinking until the loss of the ACI signal is recovered.
- When the motor drive stops, the condition of warning does not exist, then the warning will disappear.

## 03-20 Multi-function Output 1 (AFM1)
## 03-23 Multi-function Output 2 (AFM2)

Factory Setting: 0

Settings 0~23

Function Chart

| Settings | Functions | Descriptions |
|---|---|---|
| 0 | Output frequency (Hz) | Max. frequency Pr.01-00 is regarded as 100%. |
| 1 | Frequency command (Hz) | Max. frequency Pr.01-00 is regarded as 100%. |
| 2 | Motor speed (Hz) | 600Hz is regarded as 100% |
| 3 | Output current (rms) | (2.5 X rated current) is regarded as 100% |
| 4 | Output voltage | (2 X rated voltage) is regarded as 100% |
| 5 | DC Bus Voltage | 450V (900V)=100% |
| 6 | Power factor | -1.000~1.000=100% |
| 7 | Power | Rated power is regarded as 100% |
| 9 | AVI1 | 0~10V/ 0~20mA/ 4~20mA =0~100% |
| 10 | ACI | 4~20mA/ 0~10V/ 0~20mA =0~100% |
| 11 | AVI2 | 0~10V/ 0~20mA/ 4~20mA =0~100% |
| 20 | Output for CANopen control | For CANopen analog output |
| 21 | RS485 analog output | For communication output (CMC-MOD01, CMC-EIP01, CMC-PN01, CMC-DN01) |
| 22 | Analog output for communication card | For communication output (CMC-MOD01, CMC-EIP01, CMC-PN01, CMC-DN01) |
| 23 | Constant voltage/current output | Pr.03-32 and Pr.03-33 controls voltage/current output level<br>0~100% of Pr.03-32 corresponds to 0~10V of AFM1. |

## 03-21 Gain of Analog Output 1 (AFM1)
## 03-24 Gain of Analog Output 2 (AFM2)

Factory Setting: 100.0

Settings 0~500.0%

It is used to adjust the analog voltage level (Pr.03-20) that terminal AFM outputs.

This parameter is set the corresponding voltage of the analog output 0.

## 03-22 Analog Output 1 when in REV Direction (AFM1)
## 03-25 Analog Output 2 when in REV Direction (AFM2)

Factory Setting: 0

Settings 0: Absolute value in REV direction

1: Output 0V in REV direction; output 0-10V in FWD direction

2: Output 5-0V in REV direction; output 5-10V in FWD direction

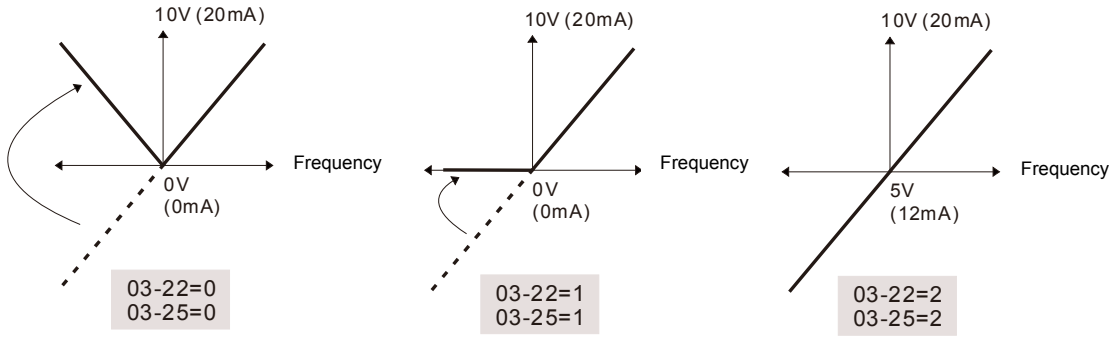


Selections for the analog output direction

## 03-27 AFM2 Output Bias

Factory Setting: 0.00

Settings -100.00~100.00%

- Example 1, AFM2 0-10V is set output frequency, the output equation is:
  10V*(output frequency/01-00)*03-24+10V*03-27
- Example 2, AFM2 0-20mA is set output frequency, the output equation is:
  20mA*(output frequency/01-00)*03-24+20mA *03-27
- Example 3, AFM2 4-20mA is set output frequency, the output equation is:
  4mA+16mA*(output frequency/01-00)*03-24+16mA *03-27
- This parameter can set the corresponded voltage of 0 for analog output.

## 03-28 AVI Selection

Factory Setting: 0

Settings 0: 0-10V
1: 0-20mA
2: 4-20mA

## 03-29 ACI Selection

Factory Setting: 0

Settings 0: 4-20mA
1: 0-10V
2: 0-20mA

- When changing the input mode, please check if the switch of external terminal (SW3, SW4) corresponds to the setting of Pr.03-28~03-29.

## 03-30 Status of PLC Output Terminal

Factory Setting:
Read only

Settings Monitor the status of PLC analog output terminals

- P.03-30 shows the external multi-function output terminal that used by PLC.

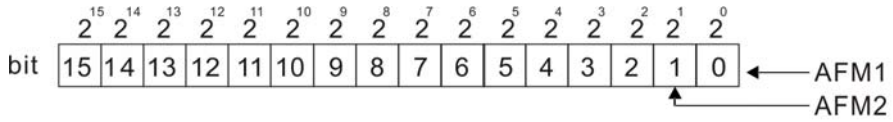


0=OFF
1=ON

Note

| | | |
|---|---|---|
| $2^{15}$ = 32768 | $2^{14}$ = 16384 | $2^{13}$ = 8192 |
| $2^{12}$ = 4096 | $2^{11}$ = 2048 | $2^{10}$ = 1024 |
| $2^{9}$ = 512 | $2^{8}$ = 256 | $2^{7}$ = 128 |
| $2^{6}$ = 64 | $2^{5}$ = 32 | $2^{4}$ = 16 |
| $2^{3}$ = 8 | $2^{2}$ = 4 | $2^{1}$ = 2 | $2^{0}$ = 1 |

📖 For Example:

If the value of Pr.03-30 displays 0002h (Hex), it means AFM1and AFM2 are used by PLC.

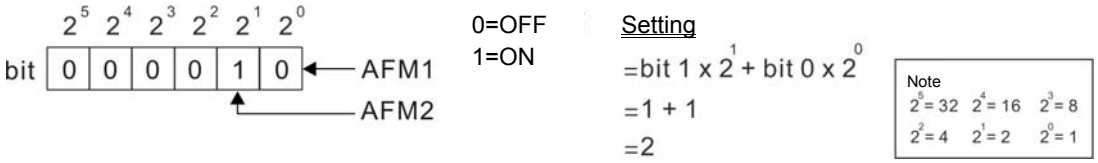


## 03-31 AFM2 Output Selection

## 03-34 AFM1 Output Selection

Factory Setting: 0

Settings 0: 0-20mA output

1: 4-20mA output

## 03-32 AFM1 DC output setting level

## 03-33 AFM2 DC Output Setting Level

Factory Setting: 0.00

Settings 0.00~100.00%

📖 Pair with Multi-Function Output : 23, Pr03-32 and Pr03-33 can output constant AFM voltage.

📖 Set Pr03-32 between 0 to 100%.00 to correspond to 0~10V of AFM1

📖 Set Pr03-33 between 0 to 100.00 % to correspond to 0~10V of AFM2

## 03-35 AFM1 Filter Output Time

## 03-36 AFM2 Filter Output Time

Factory Setting: 0.01

Settings 0.00~20.00 sec.

## 03-44 MO by AI level

Factory Setting: 0

Settings 0: AVI1

1: ACI

2: AVI2

## 03-45 AI Upper level

Factory Setting: 50.00

Settings -100.00%~100.00%

## 03-46 AI Lower level

Factory Setting: 10.00

Settings -100.00%~100.00%

📖 This function requires working with Multi-function Output item “67” Analog signal level achieved. The MO active when AI input level is higher than Pr03-45 AI Upper level. The MO shutoffs when the AI input is lower that Pr03-46 AI Lower level.

📖 AI Upper level must be higher than AI Lower level

## 03-50 Analog Input Curve Selection

Factory Setting: 7

Settings
0: Regular Curve
1: 3 point curve of AVI1
2: 3 point curve of ACI
3: 3 point curve of AVI 1& ACI
4: 3 point curve of AVI2
5: 3 point curve of AVI 1& AVI2
6: 3 point curve of ACI & AVI2
7: 3 point curve of AVI1 & ACI & AVI2

- Set Pr03-50=0, all analog input signal are calculated by using bias and gain.
- Set Pr03-50=1, AVI1 is calculated by using frequency and voltage/current in corresponding format (Pr03-51~Pr03-56), other analog input signals are calculated by using bias and gain.
- Set Pr03-50=2, ACI is calculated by using frequency and voltage/current in corresponding format (Pr03-57~Pr03-62), other analog input signals are calculated by using bias and gain.
- Set Pr03-50=3, AVI1 and ACI are calculated by using frequency and voltage/current in corresponding format (Pr03-51~Pr03-62), other analog input signals are calculated by using bias and gain.
- Set Pr03-50=4, AVI2 is calculated by using frequency and voltage in corresponding format (Pr03-63~Pr03-68), other analog input signals are calculated by using bias and gain.
- Set Pr03-50=5, AVI1 and AVI2 are calculated by using frequency and voltage/current in corresponding format (Pr03-51~Pr03-56 and Pr03-63~Pr03-68), other analog input signal are calculated by using bias and gain.
- Set Pr03-50=6, ACI and AVI2 are calculated by using frequency and voltage/current in corresponding format (Pr03-57~Pr03-68), other analog input signals are calculated by using bias and gain.
- Set Pr03-50=7, all the analog input signals are calculated by using frequency and voltage/current in corresponding format (Pr03-51 ~ Pr03-68)

## 03-51 AVI1 Low Point

Factory Setting: 0.00

Settings
03-28=0, 0.00~10.00V
03-28≠0, 0.00~20.00mA

## 03-52 AVI1 Proportional Low Point

Factory Setting: 0.00

Settings
-100.00~100.00%

## 03-53 AVI1 Mid Point

Factory Setting: 5.00

Settings
03-28=0, 0.00~10.00V
03-28≠0, 0.00~20.00mA

## 03-54 AVI1 Proportional Mid Point

Factory Setting: 50.00

Settings 0.00~100.00%

## 03-55 AVI1 High Point

Factory Setting: 10.00

Settings 03-28=0, 0.00~10.00V

03-28≠0, 0.00~20.00mA

## 03-56 AVI1 Proportional High Point

Factory Setting: 100.00

Settings -100.00~100.00%

- When Pr.03-28=0, AVI1 setting is 0-10V and the unit is in voltage (V).
- When Pr.03-28≠0, AVI1 setting is 0-20mA or 4-20mA and the unit is in current (mA).
- When setting analog input AVI1 to frequency command, it 100% corresponds to Fmax (Pr.01-00 Max. operation frequency).
- The 3 parameters (Pr03-51, Pr03-53 and Pr03-53) must meet the following argument: P03-51<P03-53<P03-55. The 3 proportional points (Pr03-52, Pr03-54 and Pr03-56) doesn't have any limit. Between two points is a linear calculation. The ACI and AVI2 are same as AVI1.
- The output % will become 0% when the AVI input value is lower than low point setting.

For example:

Pr 03-51=0V；Pr 03-52=0%
Pr 03-53=5V；Pr 03-54=50%
Pr 03-55=10V；Pr 03-56=100%

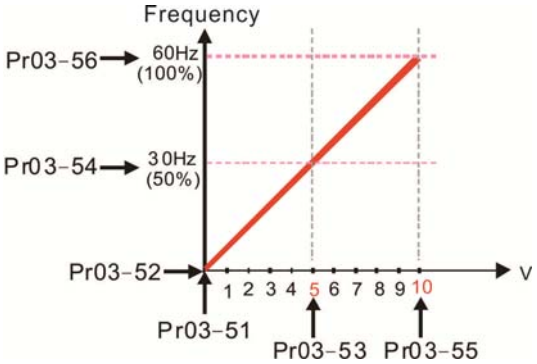


Pr 03-51=0V；Pr 03-52=100%
Pr 03-53=5V；Pr 03-54=50%
Pr 03-55=10V；Pr 03-56=0%

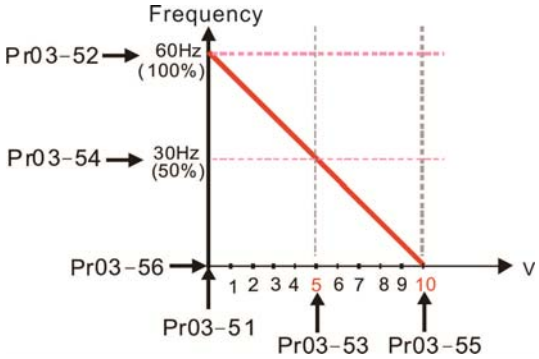


Pr 03-51=1V；Pr 03-52=10%
Pr 03-53=5V；Pr 03-54=50%
Pr 03-55=10V；Pr 03-56=100%

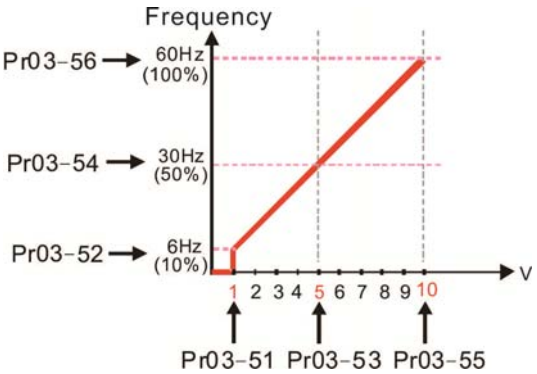


Pr 03-51=1V；Pr 03-52=10%
Pr 03-53=5V；Pr 03-54=50%
Pr 03-55=9V；Pr 03-56=100%

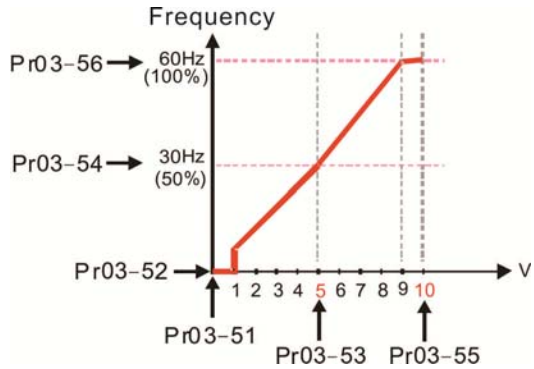

Pr 03-51=0V ; Pr 03-52=10%
Pr 03-53=5V ; Pr 03-54=50%
Pr 03-55=10V ; Pr 03-56=100%

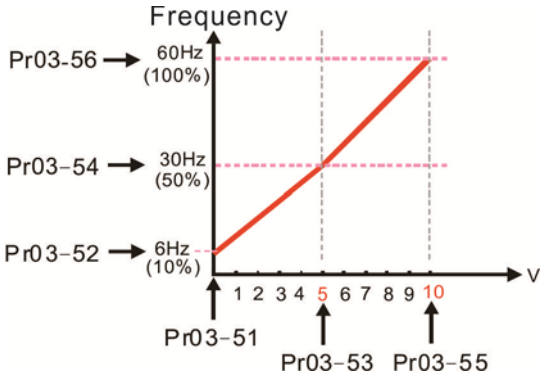


Pr 03-51=1V ; Pr 03-52=0%
Pr 03-53=5V ; Pr 03-54=50%
Pr 03-55=10V ; Pr 03-56=100%

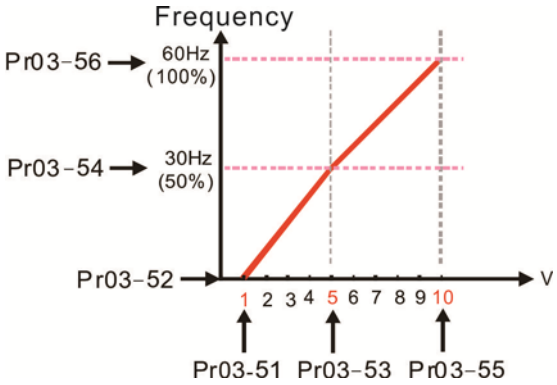


## 03-57 ACI Low Point

Factory Setting: 4.00

Settings Pr.03-29=1, 0.00~10.00V
Pr.03-29≠1, 0.00~20.00mA

## 03-58 ACI Proportional Low Point

Factory Setting: 0.00

Settings -100.00~100.00%

## 03-59 ACI Mid Point

Factory Setting: 12.00

Settings 03-29=1, 0.00~10.00V
03-29≠1, 0.00~20.00mA

## 03-60 ACI Proportional Mid Point

Factory Setting: 50.00

Settings -100.00~100.00%

## 03-61 ACI High Point

Factory Setting: 20.00

Settings 03-29=1, 0.00~10.00V
03-29≠1, 0.00~20.00mA

## 03-62 ACI Proportional High Point

Factory Setting: 100.00

Settings -100.00~100.00%

- When Pr.03-29=1, ACI setting is 0-10V and the unit is in voltage (V).
- When Pr.03-29≠1, ACI setting is 0-20mA or 4-20mA and the unit is in current (mA).
- When setting analog input ACI to frequency command, it 100% corresponds to Fmax (Pr.01-00 Max. operation frequency).

- The 3 parameters (Pr03-57, Pr03-59 and Pr03-61) must meet the following argument: P03-57<P03-59<P03-61. The 3 proportional points (Pr03-58, Pr03-60 and Pr03-62) doesn't have any limit. Between two points is a linear calculation.
- The output % will become 0% when the ACI input value is lower than low point setting.
  For example:
  P03-57=2mA; P03-58=10%. The output will become 0% when AVI input is lower than 2mA. If the ACI input is swing between 2mA and 2.1mA, drive's output frequency will beats between 0% and 10%.

| 03-63 | Positive AVI2 Voltage Low Point |
|---|---|
| | Factory Setting: 0.00 |
| | Settings 0.00~10.00V |

| 03-64 | Positive AVI2 Voltage Proportional Low Point |
|---|---|
| | Factory Setting: 0.00 |
| | Settings -100.00~100.00% |

| 03-65 | Positive AVI2 Voltage Mid Point |
|---|---|
| | Factory Setting: 5.00 |
| | Settings 0.00~10.00V |

| 03-66 | Positive AVI2 Voltage Proportional Mid Point |
|---|---|
| | Factory Setting: 50.00 |
| | Settings -100.00~100.00% |

| 03-67 | Positive AVI2 Voltage High Point |
|---|---|
| | Factory Setting: 10.00 |
| | Settings 0.00~10.00V |

| 03-68 | Positive AVI2 Voltage Proportional High Point |
|---|---|
| | Factory Setting: 100.00 |
| | Settings -100.00~100.00% |

- When setting analog input AVI2 to frequency command, it 100% corresponds to Fmax (Pr.01-00 Max. operation frequency).
- The 3 parameters (Pr03-63, 03-65 and Pr03-67) must meet the following argument: P03-63<P03-65<P03-67. The 3 proportional points (Pr03-58, Pr03-60 and Pr03-62) doesn't have any limit. Between two points is a linear calculation.
- The output % will become 0% when the AVI2 input value is lower than low point setting.
  For example:
  P03-63 = 1V; P03-64 = 10%. The output will become 0% when AVI input is lower than 2mA. If the ACI input is swing between 1V and 1.1V, drive's output frequency will beats between 0% and 10%.
- When AVI2 Selection (Pr03-28) is AVI1, the setting range of Pr03-51, Pr03-52, and Pr03-55 have to be 0.00~10.00 or 0.00~20.00.
- When ACI Selection (Pr03-29) is AVI1, the setting range of Pr03-57, Pr03-59 and Pr03-61 have to be 0.00~10.00 or 0.00~20.00.

📖 The analog input values can be set at Pr03-51~Pr03-68 and the maximum operating frequency can be set at Pr01-00. The corresponding functions of open-loop control are shown as image below.

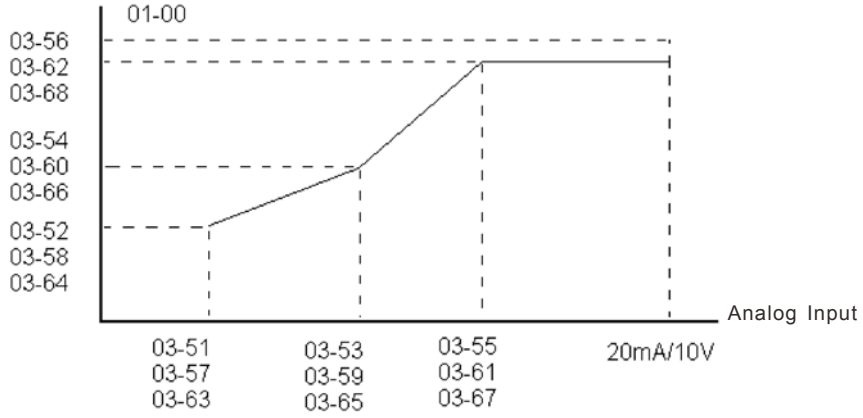

# 04 Multi-Step Speed Parameters

✓ This parameter can be set during operation.

| | |
|---|---|
| ✓ 04-00 | 1st Step Speed Frequency |
| ✓ 04-01 | 2nd Step Speed Frequency |
| ✓ 04-02 | 3rd Step Speed Frequency |
| ✓ 04-03 | 4th Step Speed Frequency |
| ✓ 04-04 | 5th Step Speed Frequency |
| ✓ 04-05 | 6th Step Speed Frequency |
| ✓ 04-06 | 7th Step Speed Frequency |
| ✓ 04-07 | 8th Step Speed Frequency |
| ✓ 04-08 | 9th Step Speed Frequency |
| ✓ 04-09 | 10th Step Speed Frequency |
| ✓ 04-10 | 11th Step Speed Frequency |
| ✓ 04-11 | 12th Step Speed Frequency |
| ✓ 04-12 | 13th Step Speed Frequency |
| ✓ 04-13 | 14th Step Speed Frequency |
| ✓ 04-14 | 15th Step Speed Frequency |

Factory Setting: 0.00

Settings 0.00~599.00Hz

- The Multi-function Input Terminals (refer to setting 1~4 of Pr.02-01~02-08 and 02-26~02-31) are used to select one of the AC motor drive Multi-step speeds (max. 15th speeds). The speeds (frequencies) are determined by Pr.04-00 to 04-14 as shown in the following.
- The run/stop command can be controlled by the external terminal/digital keypad/communication via Pr.00-21.
- Each one of multi-step speeds can be set within 0.00~600.00Hz during operation.
- Explanation of the timing diagram for multi-step speeds and external terminals

  The Related parameter settings are:

  1. Pr.04-00~04-14: setting multi-step speeds (to set the frequency of each step speed)
  2. Pr.02-01~02-08, 02-26~02-31: setting multi-function input terminals (multi-step speed 1~4)

  - Related parameters:

    01-22 JOG Frequency

    02-01 Multi-function Input Command 1 (MI1)

    02-02 Multi-function Input Command 2 (MI2)

    02-03 Multi-function Input Command 3 (MI3)

    02-04 Multi-function Input Command 4 (MI4)

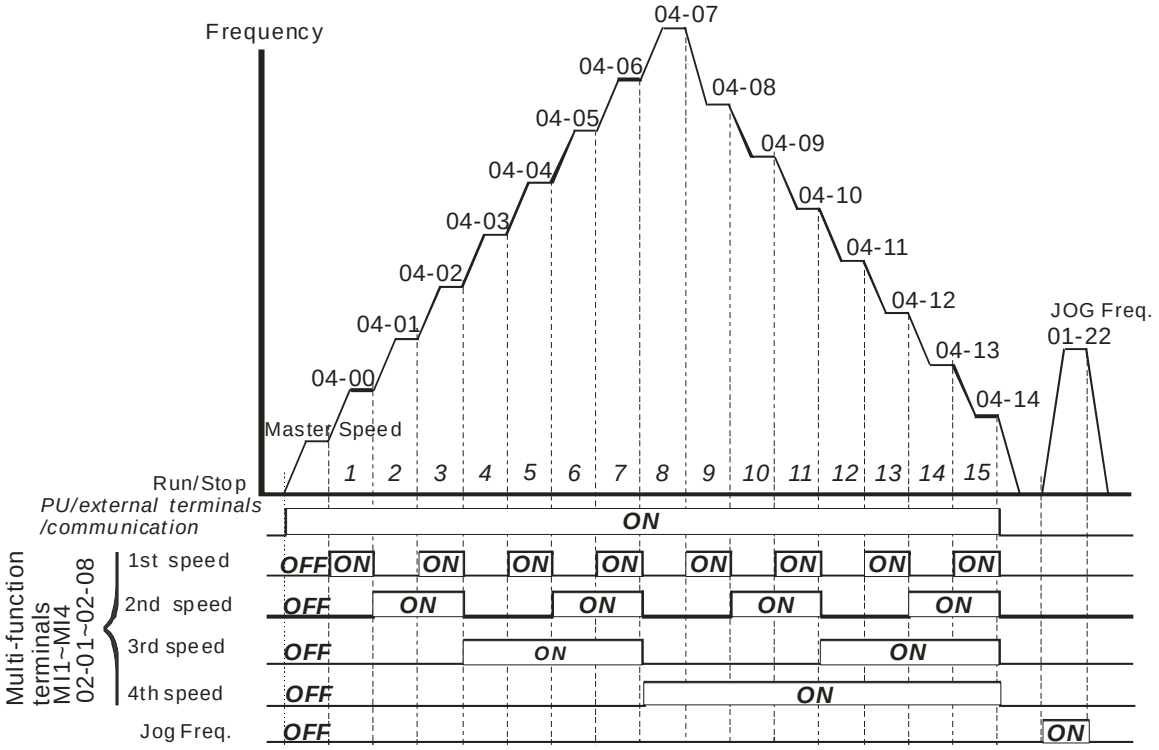


**Multi-speed via External Terminals**

| | | |
|---|---|---|
| ✓ | 04-50 | PLC Buffer 0 |
| ✓ | 04-51 | PLC Buffer 1 |
| ✓ | 04-52 | PLC Buffer 2 |
| ✓ | 04-53 | PLC Buffer 3 |
| ✓ | 04-54 | PLC Buffer 4 |
| ✓ | 04-55 | PLC Buffer 5 |
| ✓ | 04-56 | PLC Buffer 6 |
| ✓ | 04-57 | PLC Buffer 7 |
| ✓ | 04-58 | PLC Buffer 8 |
| ✓ | 04-59 | PLC Buffer 9 |
| ✓ | 04-60 | PLC Buffer 10 |
| ✓ | 04-61 | PLC Buffer 11 |
| ✓ | 04-62 | PLC Buffer 12 |
| ✓ | 04-63 | PLC Buffer 13 |
| ✓ | 04-64 | PLC Buffer 14 |
| ✓ | 04-65 | PLC Buffer 15 |
| ✓ | 04-66 | PLC Buffer 16 |
| ✓ | 04-67 | PLC Buffer 17 |
| ✓ | 04-68 | PLC Buffer 18 |
| ✓ | 04-69 | PLC Buffer 19 |

Factory Setting: 0

Settings 0~65535

📖 The Pr 04-50~Pr04-69 can be combined with PLC or HMI programming for variety application.

# 05 Motor Parameters

✓ This parameter can be set during operation.

## 05-00 Motor Auto Tuning

Factory Setting: 0

Settings 0: No function
1: Rolling test for induction motor(IM) (Rs, Rr, Lm, Lx, no-load current) [motor running]
2: Static test for induction motor [motor not running]
5: Dynamic test for PM (SPM) motor [motor running]
13: Static test for PM(IPM) motor

Induction Motor

📖 This parameter can conduct motor parameters auto test. When setting as 1, motor will roll for more than one round.

📖 Press 【Run】to begin auto tuning when the setting is done. The measured value will be written into motor 1 (Pr.05-05 ~05-09, Rs, Rr, Lm, Lx, no-load current) and motor 2 (Pr.05-17 to Pr.05-21) automatically.

To begin AUTO-Tuning in rolling test:

1. Make sure that all the parameters are set to factory settings (Pr00-02=9 or 10) and the motor wiring is correct.
2. Make sure the motor has no-load before executing auto-tuning and the shaft is not connected to any belt or gear motor. It is recommended to set to 2 if the motor can't separate from the load.
3. Please set motor related parameters according to motor nameplate.

| | Motor 1 Parameter | Motor 2 Parameter |
|---|---|---|
| Motor Rated Frequency | 01-01 | 01-35 |
| Motor Rated Voltage | 01-02 | 01-36 |
| Motor Full-load Current | 05-01 | 05-13 |
| Motor Rated Power | 05-02 | 05-14 |
| Motor Rated Speed | 05-03 | 05-15 |
| Motor Pole Numbers | 05-04 | 05-16 |

4. Set Pr.05-00=1 and press【Run】, the drive will begin auto-tuning. Please be aware of the motor that it starts spinning as【Run】 is pressed.
5. When auto-tuning is completed, please check if the measured values are written into motor 1 (Pr.05-05 ~05-09) and motor 2 (Pr.05-17 ~05-21) automatically.
6. Mechanical equivalent circuit

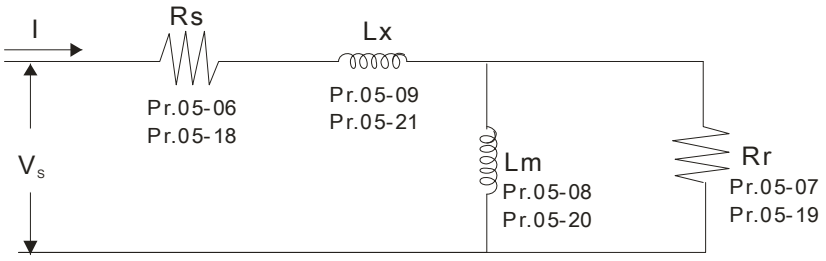

※ If Pr.05-00 is set to 2 (static test), user needs to input the no-load current value of motor into Pr.05-05 for motor 1/Pr.05-17 for motor 2.

**NOTE**

☑ When auto-tuning 2 motors, it needs to set multi-function input terminals (setting 14) or change Pr.05-22 for motor 1/motor 2 selection.

☑ The no-load current is usually 20~50% X rated current.

📖 The rated speed cannot be greater than or equal to 120f/p (f = rated frequency Pr.01-01/01-35; P: number of motor poles Pr.05-04/05-16).

### 05-01 Full-load Current of Induction Motor 1（A）

Factory Setting: Determined by motors power

Settings Determined by motors power

📖 This value should be set according to the rated current of the motor as indicated on the motor nameplate. The factory setting is 90% X rated current.

Example: The rated current for 7.5HP (5.5kW) is 25 and factory setting is 22.5A. The range for setting will be 10~30A. (25*10%=2.5A and 25*120%=30A)

### 05-02 Rated Power of Induction Motor 1(kW)

Factory Setting: #.##

Settings 0~655.35 kW

📖 It is used to set rated power of the motor 1. The factory setting is the power of the drive.

### 05-03 Rated Speed of Induction Motor 1 (rpm)

Factory Setting: 1710

Settings 0~65535

1710(60Hz 4 poles); 1410(50Hz 4 poles)

📖 It is used to set the rated speed of the motor according to the motor nameplate.

### 05-04 Pole Number of Induction Motor 1

Factory Setting: 4

Settings 2~64

📖 It is used to set the number of motor poles (must be an even number).

📖 Set up Pr.05-04 after setting up Pr. 01-01 and Pr.05-03 to make sure motor operate normally. IM Motor maximum pole refer to Pr01-01 and Pr05-03.

📖 For example: the Pr05-04 factory setting range is “2~4”. If use a 6 poles motor, to set up Pr01-01 and Pr05-03 according the motor nameplate, then the Pr05-04 setting range will become 2~6 automatically.

📖 For example: when the Pr01-01=20Hz and Pr05-03=39rpm, refer to 120 x 20Hz / 39rpm=61.5 (get approximate even value 60); therefore, the maximum setting of Pr05-04 could be 60P.

**05-05** No-load Current of Induction Motor 1 (A)

Factory Setting: #.##

Settings 0 to the factory setting in Pr.05-01

📖 The factory setting is 40% motor rated current.

📖 For model with 110kW and above, default setting is 20% motor rated current.

**05-06** Stator Resistance(Rs) of Induction Motor 1

**05-07** Rotor Resistance(Rr) of Induction Motor 1

Factory Setting: #.###

Settings 0~65.535Ω

**05-08** Magnetizing Inductance(Lm) of Induction Motor 1

**05-09** Stator inductance(Lx) of Induction Motor 1

Factory Setting: #.#

Settings 0~6553.5mH

**05-13** Full-load Current of Induction Motor 2（A）

Factory Setting: Determined by motors power

Settings Determined by motors power

📖 This value should be set according to the rated frequency of the motor as indicated on the motor nameplate. The factory setting is 90% X rated current.
Example: The rated current for 7.5HP (5.5kW) is 25A and factory setting is 22.5A. The range for setting will be 10~30A.(25*40%=10A and 25*120%=30A)

**05-14** Rated Power of Induction Motor 2 (kW)

Factory Setting: #.##

Settings 0~655.35 kW

📖 It is used to set rated power of the motor 2. The factory setting is the power of the drive.

**05-15** Rated Speed of Induction Motor 2 (rpm)

Factory Setting: 1710

Settings 0~65535

📖 It is used to set the rated speed of the motor according to the motor nameplate.

**05-16** Pole Number of Induction Motor 2

Factory Setting: 4

Settings 2~64

📖 It is used to set the number of motor poles (must be an even number).

📖 Set up Pr.05-16 after setting up Pr. 01-35 and Pr.05-15 to make sure motor operate normally. IM Motor maximum pole refer to Pr01-01 and Pr05-03.

📖 For example: when the Pr01-35=20Hz and Pr05-15=39rpm, refer to 120 x 20Hz / 39rpm=61.5 (get approximate even value 60); therefore, the maximum setting of Pr05-16 could be 60P.

| 05-17 | No-load Current of Induction Motor 2 (A) |
|---|---|

Factory Setting: #.##

Settings 0 to the factory setting in Pr.05-01

- The factory setting is 40% motor rated current.
- For model with 110kW and above, default setting is 20% motor rated current.

| 05-18 | Stator Resistance (Rs) of Induction Motor 2 |
|---|---|
| 05-19 | Rotor Resistance (Rr) of Induction Motor 2 |

Factory Setting: #.###

Settings 0~65.535Ω

| 05-20 | Magnetizing Inductance (Lm) of Induction Motor 2 |
|---|---|
| 05-21 | Stator Inductance (Lx) of Induction Motor 2 |

Factory Setting: #.#

Settings 0~6553.5 mH

| 05-22 | Induction Motor 1 / 2 Selection |
|---|---|

Factory Setting: 1

Settings 1: Motor 1
2: Motor 2

- It is used to set the motor that driven by the AC motor drive.

| 05-23 | Frequency for Y-connection / Δ-connection Switch of Induction Motor |
|---|---|

Factory Setting: 60.00

Settings 0.00~599.00Hz

| 05-24 | Y-connection / Δ-connection Switch of Induction Motor IM |
|---|---|

Factory Setting: 0

Settings 0: Disable
1: Enable

| 05-25 | Delay Time for Y-connection / Δ-connection Switch of Induction Motor |
|---|---|

Factory Setting: 0.200

Settings 0.000~60.000 sec

- P.05-23~Pr.05-25 are applied in the wide range motors and the motor coil will execute the switch of Y-connection/Δ-connection as required. (The wide range motors has relation with the motor design. In general, it has higher torque at low speed and Y-connection and it has higher speed at high speed and connection).
- Pr.05-24 is used to enable/disable Y-connection/Δ-connection Switch.
- When Pr.05-24 is set to 1, the drive will select by Pr.05-23 setting and current motor frequency to switch motor to Y-connection or Δ-connection. At the same time, it will also affect motor parameters.
- Pr.05-25 is used to set the switch delay time of Y-connection/Δ-connection.
- When output frequency reaches Y-connection/Δ-connection switch frequency, drive will delay by Pr.05-25 before multi-function output terminals are active.

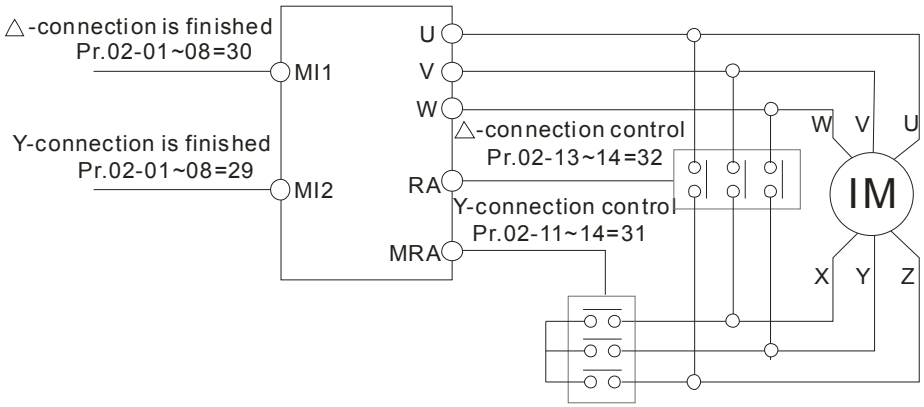


Y- △ connection switch: can be used for wide range motor
Y -connection for low speed: higher torque can be used for rigid tapping
△-connection for high speed: higher torque can be used for high-speed drilling

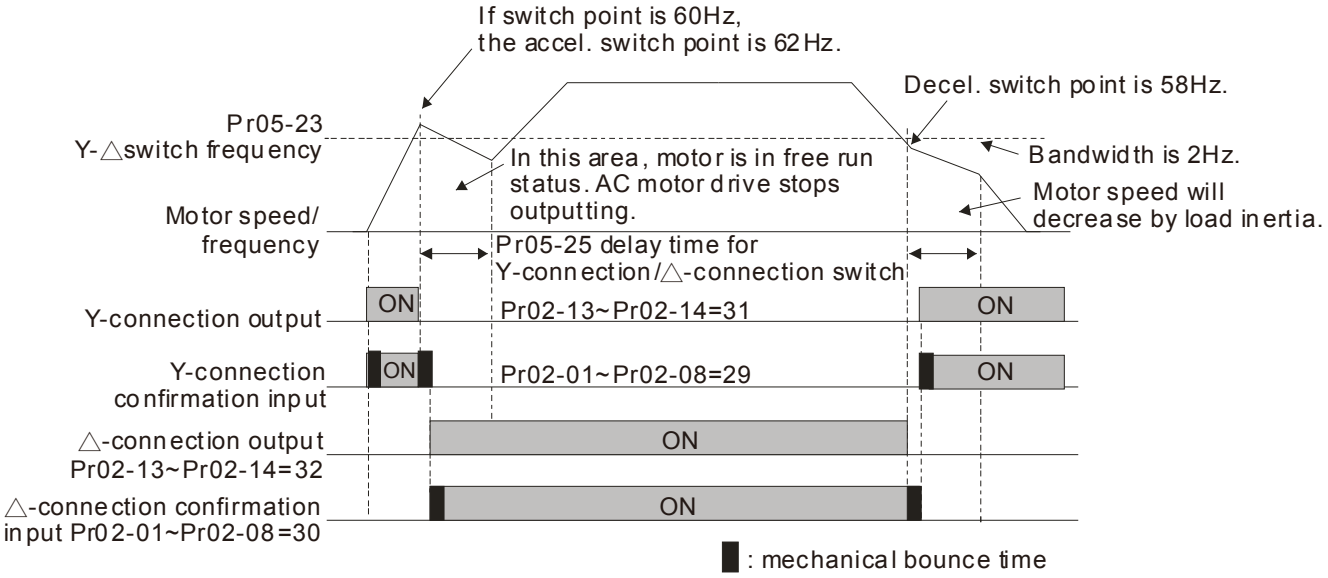


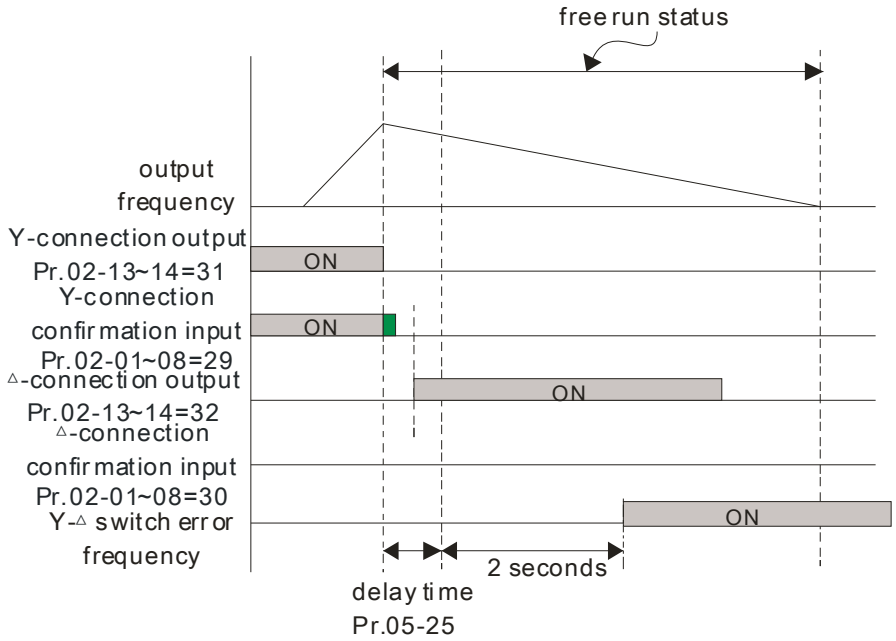


## 05-28 Motor drive's Accumulated Operating Watt per Hour (W-Hour)

Factory Setting: #.#

Settings Read only

| 05-29 | Motor drive's Accumulated Operating Kilowatt per Hour (KW-Hour) |
|---|---|

Factory Setting: #.#

Settings Read only

| 05-30 | Motor Drive's Accumulated Operating Megawatt per Hour (MW-Hour) |
|---|---|

Factory Setting: #.#

Settings Read only

📖 Records the amount of power consumed by motors. The accumulation begins when the drive is activated and record is saved when the drive stops or turns OFF. The amount of consumed watts will continue to accumulate when the drive activate again. To clear the accumulation, set Pr.00-02 to 5 then the accumulation record will return to 0.

📖 For example, set Pr05-28=400Wh, Pr05-29=150kWh, Pr05-30=76MWh. The total accumulated power is 76150.4kWh.

| 05-31 | Accumulative Motor Operation Time (Min) |
|---|---|

Factory Setting: 0

Settings 00~1439

| 05-32 | Accumulative Motor Operation Time (Day) |
|---|---|

Factory Setting: 0

Settings 00~65535

📖 Pr. 05-31 and Pr.05-32 are used to record the motor operation time. To clear the operation time, set Pr.05-31 and Pr.05-32 to 00. Operation time shorter than 60 seconds will not be recorded.

| 05-33 | Induction Motor (IM) and Permanent Magnet Motor Selection |
|---|---|

Factory Setting: 0

Settings 0: Induction Motor
1: Permanent Magnet Motor (SPM)
2: Permanent Magnet Motor (IPM)

| 05-34 | Full-load current of Permanent Magnet Motor |
|---|---|

Factory Setting: Determined by motors power

Settings Determined by motors power

📖 Set this parameter in accord to motor's nameplate. Default setting is 90% motor drive rated current.
For example: 7.5HP(5.5kW) rated current is 25A, then Pr05-34 default is 22.5A
Setting range will be 10~30A (25*10%=2.5A 25*120%=30A)

| 05-35 | Rated Power of Permanent Magnet Motor |
|---|---|

Factory Setting: Determined by motors power

Settings 0.00~655.35 kW

📖 Set motor rated power in accord to motor nameplate. Default setting is motor drive rated power.

## 05-36 Rated speed of Permanent Magnet Motor

Factory Setting: 2000

Settings 0~65535 rpm

## 05-37 Pole number of Permanent Magnet Motor

Factory Setting: 10

Settings 0~65535

## 05-38 Inertia of Permanent Magnet Motor

Factory Setting: Determined by motors power

Settings 0.0~6553.5 kg.cm$^2$

Default value will follow the chart

| Rated Power (kW) | 0.4 | 0.75 | 1.5 | 2.2 | 3.7 | 5.5 | 7.5 | 9.3 | 11 |
|---|---|---|---|---|---|---|---|---|---|
| Rotor inertia (kg.cm$^2$) | 1.2 | 3.0 | 6.6 | 15.8 | 25.7 | 49.6 | 82.0 | 121.6 | 177.0 |

| Rated Power (kW) | 14.1 | 18.2 | 27 | 33 | 40 | 46 | 54 | Above 54 |
|---|---|---|---|---|---|---|---|---|
| Rotor inertia (kg.cm$^2$) | 211.0 | 265.0 | 308.0 | 527.0 | 866.0 | 1082.0 | 1267.6 | 1515.0 |

## 05-39 Stator Resistance of PM Motor

Factory Setting: 0.000

Settings 0.000~65.535Ω

## 05-40 Permanent Magnet Motor Ld

Factory Setting: 0.00

Settings 0.00~655.35 mH

## 05-41 Permanent Magnet Motor Lq

Factory Setting: 0.00

Settings 0.00~655.35 mH

## 05-42 PG Offset angle of PM Motor

Factory Setting: 0.0

Settings 0.0~360.0°

When Pr.05-00 is set to 4, the drive will detect offset angle and write into Pr.05-42.

## 05-43 Ke parameter of PM Motor

Factory Setting: 0

Settings 0~65535 (Unit: V/1000rpm)

# 06 Protection Parameters

✓ This parameter can be set during operation.

## ✓ 06-00 Low Voltage Level

| | | Factory Setting: |
|---|---|---|
| Settings | 230V series: Frame A-D: 150.0~220.0VDC | 180.0 |
| | Frame E and above: 190.0~220.0VDC | 200.0 |
| | 460V series: Frame A-D：300.0~440.0VDC | 360.0 |
| | Frame E and above: 380.0~440.0VDC | 400.0 |
| | 575V series: 420.0~520.0VDC | 470.0 |
| | 690V series: 450.0~660.0VDC | 480.0 |

📖 This parameter is used to set the Low Voltage level. When the DC BUS voltage is lower than Pr.06-00, drive will stop output and free to stop.

📖 If the drive is triggered LV fault during the operation, drive will stop output and free to stop. There are three LV faults, LvA (LV during acceleration), Lvd (LV during deceleration), and Lvn (LV in constant speed) which will be triggered in different stage of drive operation. These faults need to be reset manually to restart the drive, while setting restart after momentary power off function (Pr.07-06, Pr.07-07), the drive will restart automatically.

📖 If LV is triggered when the drive is in stop status, the fault is named LvS (LV during stop), which will not be recorded, and the drive will restart automatically when input voltage is 30Vdc (230V series) or 60Vdc (460V series) higher than LV level.

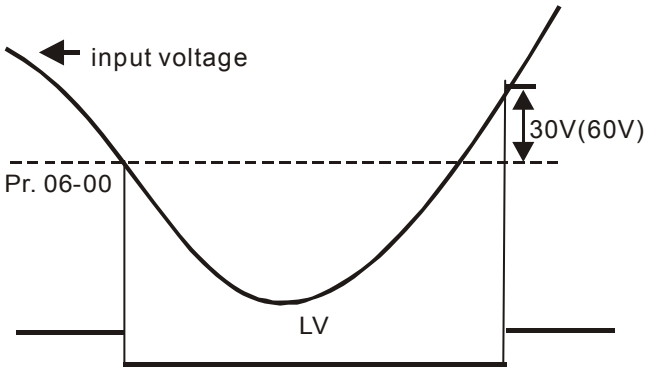


## ✓ 06-01 Over-voltage Stall Prevention

| | | Factory Setting: |
|---|---|---|
| Settings | 0: Disabled | |
| | 230V series: 0.0~450.0VDC | 380.0 |
| | 460V series: 0.0~900.0VDC | 760.0 |
| | 575V series: 0.0~1318.0VDC | 920.0 |
| | 690V series: 0.0~1116.0VDC | 1087.0 |

📖 When Pr.06-01 is set to 0.0, the over-voltage stall prevention function is disabled. When braking units or resistors are connected to the drive, this setting is suggested.

📖 When the setting is not 0.0, the over-voltage stall prevention is activated. This setting should refer to power supply system and loading. If the setting is too low, then over-voltage stall prevention will be easily activate, which may increase deceleration time.

Related parameters: Pr.01-13, Pr.01-15, Pr.01-17, Pr.01-19 Decel. Time 1~4, Pr.02-13~Pr.02-15 Multiple-function output (Relay1~3) and Pr.06-02 selection for over-voltage stall prevention.

## 06-02 Selection for Over-voltage Stall Prevention

Factory Setting: 0

Settings 0: Traditional over-voltage stall prevention
1: Smart over-voltage prevention

This function is used for the occasion that the load inertia is unsure. When it stops in the normal load, the over-voltage won't occur during deceleration and fulfill the setting of deceleration time. Sometimes, it may not stop due to over-voltage during decelerating to stop when increasing the load regenerative inertia. At this moment, the AC drive will auto add the deceleration time until drive stop.

Pr.06-02 is set to 0: During deceleration, the DC bus voltage may exceed its maximum allowable value due to motor regeneration in some situation, such as loading inertia is too high or decel. Time is set too short. When traditional over-voltage stall prevention is enabled, the drive will not decelerate further and keep the output frequency constant until the voltage drops below the setting value again.

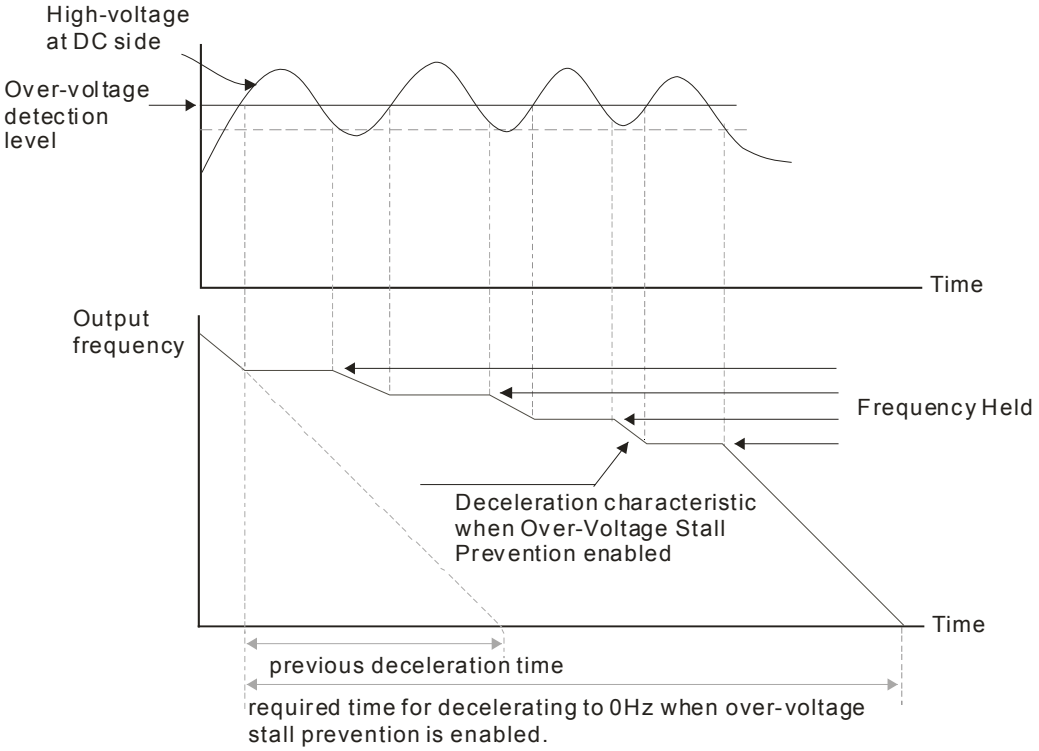


When Pr.06-02 is set to 1, the drive will maintain DCbus voltage when decelerating and prevent OV.

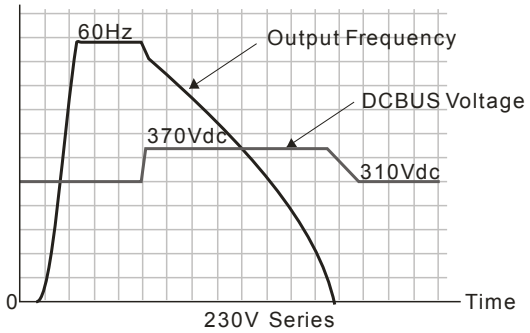

- When the over-voltage stall prevention is enabled, drive deceleration time will be larger than the setting.
- When there is any problem as using deceleration time, refer to the following items to solve it.
  1. Add the suitable deceleration time.
  2. Add brake resistor (refer to Chapter 7-1 for details) to dissipate the electrical energy that regenerated from the motor as heat type.
- Related parameters: Pr.01-13, Pr.01-15, Pr.01-17, Pr.01-19 Decel. Time 1~4, Pr.02-13~Pr.02-15 Multiple-function output (Relay1~3), and Pr.06-01 over-voltage stall prevention.

## 06-03 Over-current Stall Prevention during Acceleration

Factory Setting: 120/120/120/120

Settings 230V/460V series
Light duty: 0~130% (100%: drive's rated current)
Normal duty: 0~160% (100%: drive's rated current)
575V/690V series
Light duty: 0~125% (100%: drive's rated current)
Normal duty: 0~150% (100%: drive's rated current)

- If the motor load is too large or drive acceleration time is too short, the AC drive output current may increase abruptly during acceleration and it may cause motor damage or trigger protection functions (OL or OC). This parameter is used to prevent this situation.
- During acceleration, the AC drive output current may increase abruptly and exceed the value specified by Pr.06-03 due to rapid acceleration or excessive load on the motor. When this function is enabled, the AC drive will stop accelerating and keep the output frequency constant until the current drops below the maximum value.
- When the over-current stall prevention is enabled, drive acceleration time will be larger than the setting.
- When the Over-Current Stall Prevention occurs due to too small motor capacity or in the factory setting, please decrease Pr.06-03 setting.
- When there is any problem by using acceleration time, refer to the following items to solve it.
  1. Add the suitable acceleration time.
  2. Setting Pr.01-44 Optimal Acceleration/Deceleration Setting to 1, 3 or 4 (auto accel.)
  3. Related parameters: Pr.01-12, 01-14, 01-16, 01-18 (settings of accel. time 1~4), Pr.01-44 Optimal Acceleration/Deceleration Setting, Pr.02-13~02-15(Multi-function Output Relay1~3).

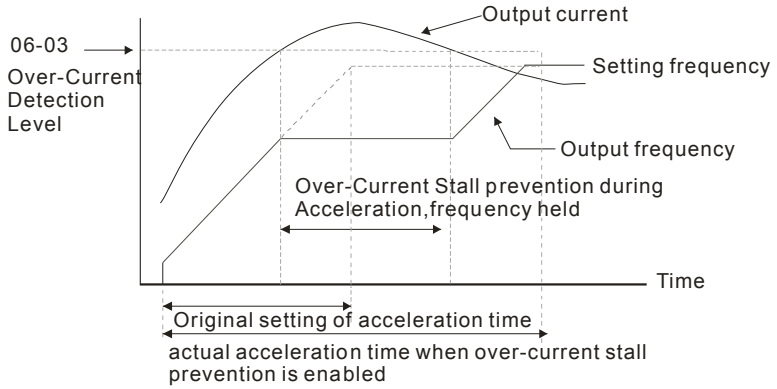

## 06-04 Over-current Stall Prevention during Operation

Factory Setting:
120/120/120/120

Settings 230V/460V series
Light duty: 0~130% (100%: drive's rated current)
Normal duty: 0~160% (100%: drive's rated current)
575V/690V series
Light duty: 0~1250% (100%: drive's rated current)
Normal duty: 0~150% (100%: drive's rated current)

- It is a protection for drive to auto decrease output frequency when the motor is over-load abruptly during motor constant operation.
- If the output current exceeds the setting specified in Pr.06-04 when the drive is operating, the drive will decrease its output frequency (according to Pr.06-05) to prevent the motor stall. If the output current is lower than the setting specified in Pr.06-04, the drive will accelerate (according to Pr.06-05) again to catch up with the set frequency command value.

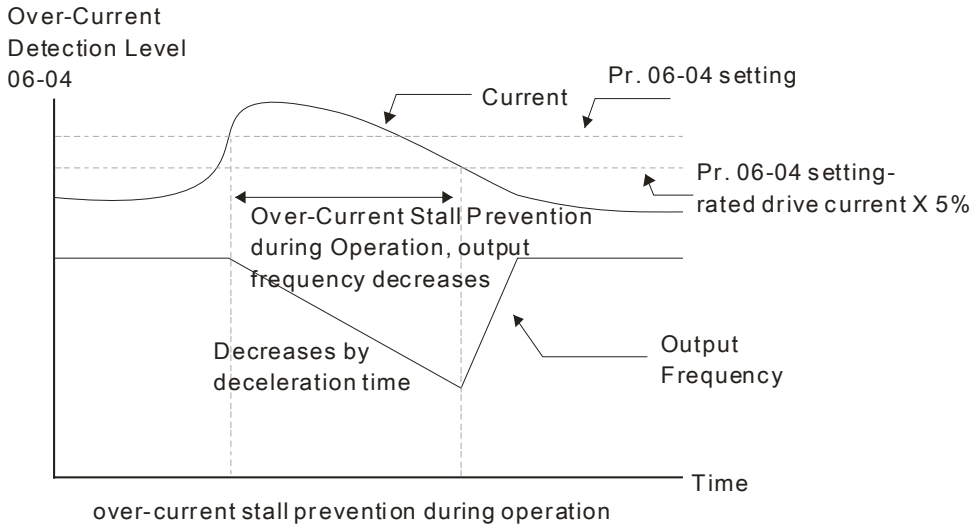

over-current stall prevention during operation

## 06-05 Accel./Decel. Time Selection of Stall Prevention at Constant Speed

Factory Setting: 0

Settings 0: by current accel/decel time
1: by the 1st accel/decel time
2: by the 2nd accel/decel time
3: by the 3rd accel/decel time
4: by the 4th accel/decel time
5: by auto accel/decel

- It is used to set the accel./decel. time selection when stall prevention occurs at constant speed.

### 06-06 Over-torque Detection Selection (OT1)

Factory Setting: 0

Settings 0: No function
1: Continue operation after Over-torque detection during constant speed operation
2: Stop after Over-torque detection during constant speed operation
3: Continue operation after Over-torque detection during RUN
4: Stop after Over-torque detection during RUN

### 06-09 Over-torque Detection Selection (OT2)

Factory Setting: 0

Settings 0: No function
1: Continue operation after Over-torque detection during constant speed operation
2: Stop after Over-torque detection during constant speed operation
3: Continue operation after Over-torque detection during RUN
4: Stop after Over-torque detection during RUN

- When Pr.06-06 and Pr.06-09 are set to 1 or 3, it will display a warning message and won't have an abnormal record.
- When Pr.06-06 and Pr.06-09 are set to 2 or 4, it will display a warning message and will have an abnormal record.

### 06-07 Over-torque Detection Level (OT1)

Factory Setting: 120

Settings 10 to 200% (100%: drive's rated current)

### 06-08 Over-torque Detection Level (OT1)

Factory Setting: 0.1

Settings 0.0~60.0 sec

### 06-10 Over-torque Detection Level (OT2)

Factory Setting: 120

Settings 10 to 200% (100%: drive's rated current)

### 06-11 Over-torque Detection Time (OT2)

Factory Setting: 0.1

Settings 0.0~60.0 sec

- When the output current exceeds the over-torque detection level (Pr.06-07 or Pr.06-10) and also exceeds Pr.06-08 or Pr.06-11, the over torque detection will follow the setting of Pr.06-06 and Pr.06-09.
- When Pr.06-06 or Pr.06-09 is set to 1 or 3, the motor drive will have the ot1/ot2 warning after Over Torque Detection, while the motor drive will keep running. The warning will be off only until the output current is smaller than the 5% of the over-torque detection level (Pr.06-07 and Pr.06-10).

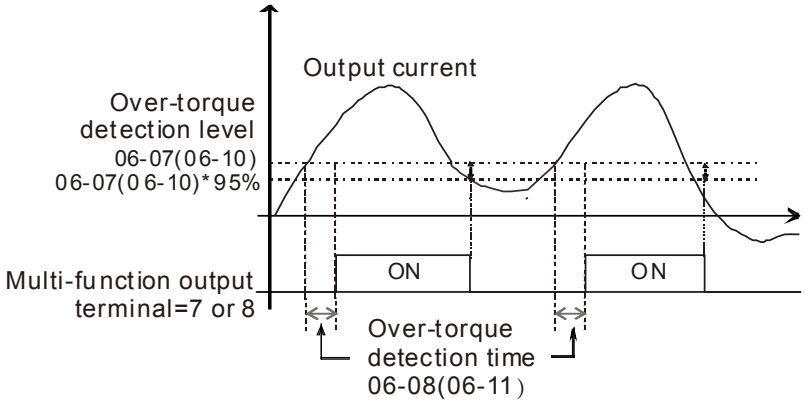


📖 When Pr.06-06 or Pr.06-09 is set to 2 or 4, the motor drive will have the ot1/ot2 fault after Over Torque Detection. Then the motor drive stop running until it is manually reset.

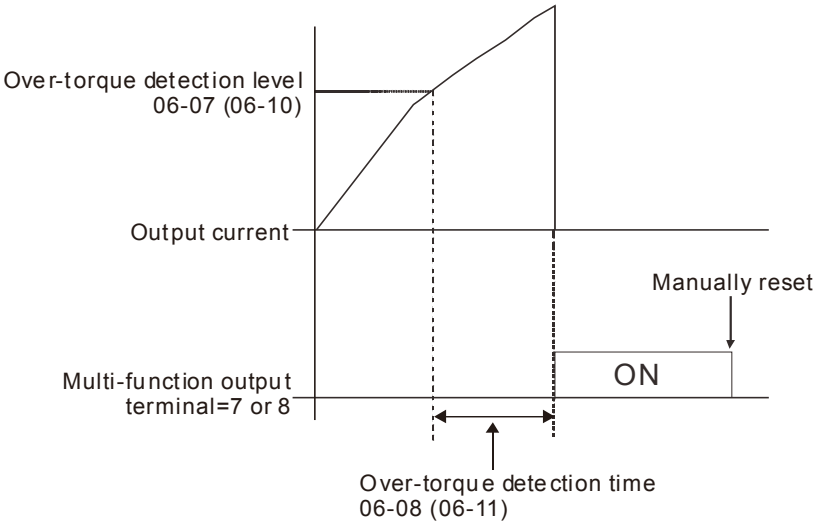


## 06-12 Current Limit

Factory Setting: 150

Settings 0~200% (100%: drive's rated current)

📖 Pr.06-12 sets the maximum output current of the drive.

## 06-13 Electronic Thermal Relay Selection (Motor 1)
## 06-27 Electronic Thermal Relay Selection (Motor 2)

Factory Setting: 2

Settings 0: Inverter motor (with external forced cooling)
1: Standard motor (so motor with fan on the shaft)
2: Disable

📖 It is used to prevent self-cooled motor overheats under low speed. User can use electronic thermal relay to limit driver's output power.

📖 Setting as 0 is suitable for special motor (motor fan using independent power supply). For this kind of motor, the cooling capacity is not related to motor speed obviously. So the action of electronic thermal relay will remain stable in low speed, which can ensure the motor's load capability in low speed.

- Setting as 1 is suitable for standard motor (motor fan is fixed on the rotor shaft). For this kind of motor, the cooling capacity is low in low speed, and the action of electronic thermal relay will reduce the action time, which ensure the life of motor.
- When the power ON/OFF is often switched, even setting as 0 or 1 can bot protect the motor well. It is because when the power is switched off, the electronic thermal relay protection will be reset. If there are several motors connected to one motor drive, please install electronic thermal relay in each motor respectively.

| | |
|---|---|
| 06-14 | Electronic Thermal Characteristic for Motor 1 |
| 06-28 | Electronic Thermal Characteristic for Motor 2 |

Factory Setting: 60.0

Settings 30.0~600.0 sec

- The parameter is set by the 150% of motor rated current and the setting of Pr.06-14 and Pr.06-28 to prevent the motor damaged from overheating. When it reaches the setting, it will display "EoL1/EoL2" and the motor will be in free running.
- This parameter is to set the action time of electronic thermal relay. It works based on the I2t characteristic curve of electronic thermal relay, output frequency and current of motor drive, and operation time to prevent motor from over-heat.

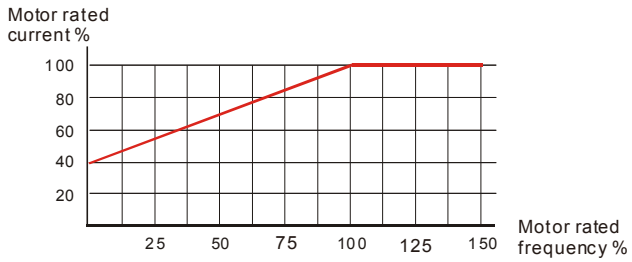


Motor cooling curve with shaft-fixed fan

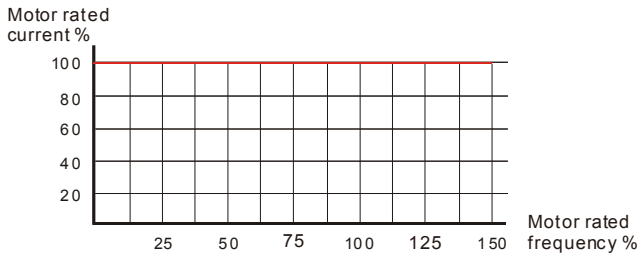


Motor cooling curve with independent fan

- The action of electronic thermal relay depends on the setting of Pr.06-13/Pr.06-27.
  1. 06-13 or 06-27 is set 0 (using standard motor)：
     When output current of motor drive is higher than 150% of motor current (refer to motor cooling curve with independent fan), motor drive will start to count the time. When the accumulated time exceeds Pr.06-14 or 06-28, electronic thermal relay will act.
  2. 06-13 or 06-27 is set 1 (using special motor)：
     When output current of motor drive is higher than 150% of motor current (refer to motor cooling curve with shaft-fixed fan), motor drive will start to count the time. When the accumulated time exceeds Pr.06-14 or 06-28, electronic thermal relay will act.
  3. If 05-01 do not have setting current, the current will be 90% of Pr00-01 motor drive current.
- The real electronic thermal relay action time will adjust with drive output current (shown as motor loading rate). When the current is high, the action time is short; when the current is high, the action time is short. Please refer to following chart:

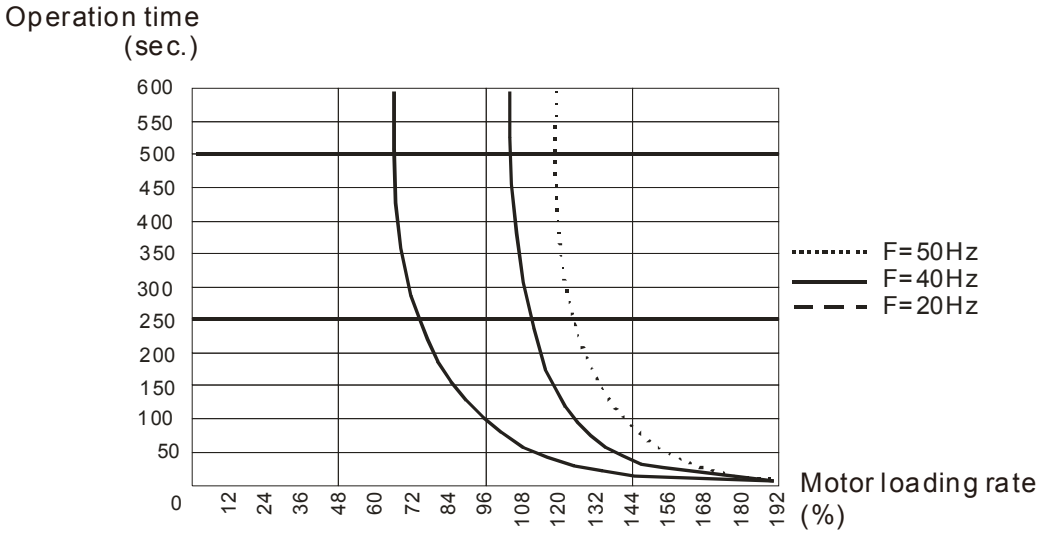


## 06-15 Heat Sink Over-heat (OH1) Warning

Factory Setting: 105.0

Settings 0.0~110.0ºC

- When using heavy duty or advanced control mode, the OH warning will be disabled if Pr.06-15 remains as default. When the temperature reaches 100ºC, motor drive will stop with IGBT over-heat fault.
- When using normal duty or general control mode, the OH warning will be disabled if Pr06-15 is set to 110ºC. When the temperature reaches 110ºC, motor drive will stop with IGBT over-heat fault.
- When IGBT temperature above 15ºC of setting value the cooling fan will enhance performance to 100%; otherwise, when IGBT temperature below 35ºC of setting value and the temperature of CAP below 10ºC of OH2 over-heat warning, the cooling fan will reset. 35ºC will be the criterion if parameter setting below to 35ºC.

## 06-16 Stall Prevention Limit Level (Flux weakening area current stall prevention level)

Factory Setting: 50

Settings 0~100% (Refer to Pr.06-03, Pr.06-04)

- When operation frequency is larger than Pr.01-01; e.g. Pr.06-03=150%, Pr.06-04=100% and Pr. 06-16=80%:
  Calculate the Stall Prevention Level during acceleration: Pr.06-03 * Pr.06-16=150x80%=120%.
  Calculate the Stall Prevention Level at constant speed: Pr.06-04 * Pr.06-16=100x80%=80%.

| | |
|---|---|
| 06-17 | Fault Record 1 (Present Fault Record) |
| 06-18 | Fault Record 2 |
| 06-19 | Fault Record 3 |
| 06-20 | Fault Record 4 |
| 06-21 | Fault Record 5 |
| 06-22 | Fault Record 6 |

Settings

0: No fault record

1: Over-current during acceleration (ocA)
2: Over-current during deceleration (ocd)
3: Over-current during constant speed(ocn)
4: Ground fault (GFF)
5: IGBT short-circuit (occ)
6: Over-current at stop (ocS)
7: Over-voltage during acceleration (ovA)
8: Over-voltage during deceleration (ovd)
9: Over-voltage during constant speed (ovn)
10: Over-voltage at stop (ovS)
11: Low-voltage during acceleration (LvA)
12: Low-voltage during deceleration (Lvd)
13: Low-voltage during constant speed (Lvn)
14: Stop mid-low voltage (LvS)
15: Phase loss protection (OrP)
16: IGBT over-heat (oH1)
17: Capacitance over-heat (oH2) (for 40hp above)
18: tH1o (TH1 open: IGBT over-heat protection error)
19: tH2o (TH2 open: capacitance over-heat protection error)
21: Drive over-load (oL)
22: Electronics thermal relay 1 (EoL1)
23: Electronics thermal relay 2 (EoL2)
24: Motor PTC overheat (oH3) (PTC/PT100)
26: Over-torque 1 (ot1)
27: Over-torque 2 (ot2)
28: Low current (uC)
30: Memory write-in error (cF1)
31: Memory read-out error (cF2)
33: U-phase current detection error (cd1)
34: V-phase current detection error (cd2)
35: W-phase current detection error (cd3)
36: Clamp current detection error (Hd0)
37: Over-current detection error (Hd1)
38: Over-voltage detection error (Hd2)
39: occ IGBT short circuit detection error (Hd3)
40: Auto tuning error (AUE)
41: PID feedback loss (AFE)
48: Analog current input loss (ACE)
49: External fault input (EF)
50: Emergency stop (EF1)
51: External Base Block (bb)
52: Password error (Pcod)

53: Software code error
54: Communication error (CE1)
55: Communication error (CE2)
56: Communication error (CE3)
57: Communication error (CE4)
58: Communication Time-out (CE10)
59: PU panel Time-out (CP10)
60: Brake transistor error (bF)
61: Y-connection/Δ-connection switch error (ydc)
62: Decel. Energy Backup Error (dEb)
63: Slip error (oSL)
64: Electromagnet switch error (ryF)
72: Channel 1 (STO1~SCM1) internal hardware error (STL1)
73: External safety gate S1
74: FIRE mode output
76: Safety Torque Off (STO)
77: Channel 2 (STO2~SCM2) internal hardware error (STL2)
78: Channel 1 and Channel 2 internal hardware error (STL3)
79: U PHASE SHORT (Uocc)
80: V PHASE SHORT (Vocc)
81: W PHASE SHORT (Wocc)
82: OPHL U phase output phase loss
83: OPHL Vphase output phase loss
84: OPHL Wphase output phase loss
90: Inner PLC function is forced to stop
99: TRAP CPU command error
101: CGdE CANopen software disconnect1
102: CHbE CANopen software disconnect2
103: CSyE CANopen synchronous error
104: CbFE CANopen hardware disconnect
105: CIdE CANopen index setting error
106: CAdE CANopen slave station number setting error
107: CFrE CANopen index setting exceed limit
111: InrCOM Internal communication overtime error

---

- When the fault occurs and force stopping, it will record in this parameter.
- At stop with low voltage Lv (LvS warn, no record). During operation with mid-low voltage Lv (LvA, Lvd, Lvn error, will record).
- Setting 62: when dEb function is enabled, the drive will execute dEb and record to the Pr.06-17 to Pr.06-22 simultaneously.

| | |
|---|---|
| 06-23 | Fault Output Option 1 |
| 06-24 | Fault Output Option 2 |
| 06-25 | Fault Output Option 3 |
| 06-26 | Fault Output Option 4 |

Factory Setting: 0

Settings 0 to 65535 sec (refer to bit table for fault code)

These parameters can be used with multi-function output (set to 35-38) for the specific requirement. When the fault occurs, the corresponding terminals will be activated (It needs to convert binary value to decimal value to fill in Pr.06-23 to Pr.06-26).

| Fault Code | Bit0 | Bit1 | Bit2 | Bit3 | Bit4 | Bit5 | Bit6 |
|---|---|---|---|---|---|---|---|
| | current | Volt. | OL | SYS | FBK | EXI | CE |
| 0: No fault | | | | | | | |
| 1: Over-current during acceleration (ocA) | ● | | | | | | |
| 2: Over-current during deceleration (ocd) | ● | | | | | | |
| 3: Over-current during constant speed(ocn) | ● | | | | | | |
| 4: Ground fault (GFF) | ● | | | | | | |
| 5: IGBT short-circuit (occ) | ● | | | | | | |
| 6: Over-current at stop (ocS) | ● | | | | | | |
| 7: Over-voltage during acceleration (ovA) | | ● | | | | | |
| 8: Over-voltage during deceleration (ovd) | | ● | | | | | |
| 9: Over-voltage during constant speed (ovn) | | ● | | | | | |
| 10: Over-voltage at stop (ovS) | | ● | | | | | |
| 11: Low-voltage during acceleration (LvA) | | ● | | | | | |
| 12: Low-voltage during deceleration (Lvd) | | ● | | | | | |
| 13: Low-voltage during constant speed (Lvn) | | ● | | | | | |
| 14: Stop mid-low voltage (LvS ) | | ● | | | | | |
| 15: Phase loss protection (OrP) | | ● | | | | | |
| 16: IGBT over-heat (oH1) | | | ● | | | | |
| 17: Capacitance over-heat (oH2) | | | ● | | | | |
| 18: tH1o (TH1 open) | | | ● | | | | |
| 19: tH2o (TH2 open) | | | ● | | | | |
| 21: Drive over-load (oL) | | | ● | | | | |
| 22: Electronics thermal relay 1 (EoL1) | | | ● | | | | |
| 23: Electronics thermal relay 2 (EoL2) | | | ● | | | | |
| 24: Motor PTC overheat (oH3) (PTC) | | | ● | | | | |
| 26: Over-torque 1 (ot1) | | | ● | | | | |
| 27: Over-torque 2 (ot2) | | | ● | | | | |
| 28: Low current (uC) | ● | | | | | | |
| 30: Memory write-in error (cF1) | | | | ● | | | |
| 31: Memory read-out error (cF2) | | | | ● | | | |
| 33: U-phase current detection error (cd1) | | | | ● | | | |
| 34: V-phase current detection error (cd2) | | | | ● | | | |
| 35: W-phase current detection error (cd3) | | | | ● | | | |
| 36: Clamp current detection error (Hd0) | | | | ● | | | |
| 37: Over-current detection error (Hd1) | | | | ● | | | |
| 38: Over-voltage detection error (Hd2) | | | | ● | | | |

| Fault Code | Bit0 | Bit1 | Bit2 | Bit3 | Bit4 | Bit5 | Bit6 |
|---|---|---|---|---|---|---|---|
| | current | Volt. | OL | SYS | FBK | EXI | CE |
| 39: occ IGBT short circuit detection error (Hd3) | | | | ● | | | |
| 40: Auto tuning error (AUE) | | | | ● | | | |
| 41: PID feedback loss (AFE) | | | | | ● | | |
| 43: PG feedback loss (PGF2) | | | | | ● | | |
| 44: PG feedback stall (PGF3) | | | | | ● | | |
| 45: PG slip error (PGF4) | | | | | ● | | |
| 46: PG ref loss (PGr1) | | | | | ● | | |
| 47: PG ref loss (PGr2) | | | | | ● | | |
| 48: Analog current input loss (ACE) | | | | | ● | | |
| 49: External fault input (EF) | | | | | | ● | |
| 50: Emergency stop (EF1) | | | | | | ● | |
| 51: External Base Block (bb) | | | | | | ● | |
| 52: Password error (Pcod) | | | | ● | | | |
| 53: Software code error | | | | ● | | | |
| 54: Communication error (CE1) | | | | | | | ● |
| 55: Communication error (CE2) | | | | | | | ● |
| 56: Communication error (CE3) | | | | | | | ● |
| 57: Communication error (CE4) | | | | | | | ● |
| 58: Communication Time-out (CE10) | | | | | | | ● |
| 59: PU Time-out (CP10) | | | | | | | ● |
| 60: Brake transistor error (bF) | | | | | | ● | |
| 61: Y-connection/Δ-connection switch error (ydc) | | | | | | ● | |
| 62: Decel. Energy Backup Error (dEb) | | ● | | | | | |
| 63: Slip error (oSL) | | | | | | ● | |
| 64: Electromagnet switch error (ryF) | | | | | | ● | |
| 72: Channel 1 (STO1~SCM1) internal hardware error (STL1) | | | | ● | | | |
| 73: External safety gate S1 | | | | ● | | | |
| 74: FIRE mode output | | | | | | ● | |
| 76: Safety Torque Off (STO) | | | | ● | | | |
| 77: Channel 2 (STO2~SCM2) internal hardware error (STL2) | | | | ● | | | |
| 78: Channel 1 and Channel 2 internal hardware error (STL3) | | | | ● | | | |
| 79: U phase over current (Uocc) | ● | | | | | | |
| 80: V phase over current (Vocc) | ● | | | | | | |
| 81: W phase over current (Wocc) | ● | | | | | | |
| 82: OPHL U phase output phase loss | ● | | | | | | |
| 83: OPHL Vphase output phase loss | ● | | | | | | |
| 84: OPHL Wphase output phase loss | ● | | | | | | |
| 90: Inner PLC function is forced to stop | | | | | | | |
| 99: TRAP CPU command error | | | | ● | | | |
| 101: CGdE CANopen software disconnect1 | | | | | | | ● |
| 102: CHbE CANopen software disconnect2 | | | | | | | ● |
| 103: CSyE CANopen synchronous error | | | | | | | ● |

| Fault Code | Bit0 | Bit1 | Bit2 | Bit3 | Bit4 | Bit5 | Bit6 |
|---|---|---|---|---|---|---|---|
| | current | Volt. | OL | SYS | FBK | EXI | CE |
| 104: CbFE CANopen hardware disconnect | | | | | | | ● |
| 105: CIdE CANopen index setting error | | | | | | | ● |
| 106: CAdE CANopen slave station number setting error | | | | | | | ● |
| 107: CFrE CANopen index setting exceed limit | | | | | | | ● |
| 111: InrCOM Internal communication overtime error | | | | | | | ● |

## 06-29 PTC (Positive Temperature Coefficient) Detection Selection

Factory Setting: 0

Settings 0: Warn and keep operating
1: Warn and ramp to stop
2: Warn and coast to stop
3: No warning

Pr.06-29 setting defines how the will drive operate after PTC detection.

## 06-30 PTC Level

Factory Setting: 50.0

Settings 0.0~100.0%

It needs to set AVI1/ACI/AVI2 analog input function Pr.03-00~03-02 to 6 (P.T.C. thermistor input value).

It is used to set the PTC level, and the corresponding value for 100% is max. analog input value.

## 06-31 Frequency Command for Malfunction

Factory Setting: Read only

Settings 0.00~599.00Hz

When malfunction occurs, use can check the frequency command. If it happens again, it will overwrite the previous record.

## 06-32 Output Frequency at Malfunction

Factory Setting: Read only

Settings 0.00~599.00Hz

When malfunction occurs, use can check the current frequency command. If it happens again, it will overwrite the previous record.

## 06-33 Output Voltage at Malfunction

Factory Setting: Read only

Settings 0.0~6553.5V

When malfunction occurs, user can check current output voltage. If it happens again, it will overwrite the previous record.

### 06-34 DC Voltage at Malfunction

Factory Setting: Read only

Settings 0.0~6553.5V

📖 When malfunction occurs, user can check the current DC voltage. If it happens again, it will overwrite the previous record.

### 06-35 Output Current at Malfunction

Factory Setting: Read only

Settings 0.0~6553.5Amp

📖 When malfunction occurs, user can check the current output current. If it happens again, it will overwrite the previous record.

### 06-36 IGBT Temperature at Malfunction

Factory Setting: Read only

Settings -3276.7~3276.7ºC

📖 When malfunction occurs, user can check the current IGBT temperature. If it happens again, it will overwrite the previous record.

### 06-37 Capacitance Temperature at Malfunction

Factory Setting: Read only

Settings -3276.7~3276.7ºC

📖 When malfunction occurs, user can check the current capacitance temperature. If it happens again, it will overwrite the previous record.

### 06-38 Motor Speed in rpm at Malfunction

Factory Setting: Read only

Settings -32767~32767 rpm

📖 When malfunction occurs, user can check the current motor speed in rpm. If it happens again, it will overwrite the previous record.

### 06-40 Status of Multi-function Input Terminal at Malfunction

Factory Setting: Read only

Settings 0000h~FFFFh

### 06-41 Status of Multi-function Output Terminal at Malfunction

Factory Setting: Read only

Settings 0000h~FFFFh

📖 When malfunction occurs, user can check the status of multi-function input/output terminals. If it happens again, it will overwrite the previous record.

### 06-42 Drive Status at Malfunction

Factory Setting: Read only

Settings 0000H~FFFFh

📖 When malfunction occurs, please check the drive status (communication address 2101H). If malfunction happens again, the previous record will be overwritten by this parameter.

## 06-44 STO Alarm Latch

Factory Setting: 0

Settings 0: STO alarm Latch
1: STO alarm no Latch

- Pr.06-44=0 STO Alarm Latch: after the reason of STO Alarm is cleared, a Reset command is need to clear STO Alarm.
- Pr.06-44=1 STO Alarm no Latch: after the reason of STO Alarm is cleared, the STO Alarm will be cleared automatically.
- All of STL1~STL3 error are “Alarm latch” mode (in STL1~STL3 mode, the Pr.06-44 function is no effective).

## 06-45 Treatment to Output Phase Loss (OPHL)

Factory Setting: 3

Settings 0: Warn and keep operating
1: Warn and ramp to stop
2: Warn and coast to stop
3: No warning

- The OPHL protect will be active when the setting is not 3.

## 06-46 Deceleration Time of Output Phase Loss

Factory Setting: 0.500

Settings 0.000~65.535 sec

## 06-47 Current detection level of output phase loss

Factory Setting: 1.00

Settings 0.00~100.00%

## 06-48 Output phase loss detection function executing time before run

Factory Setting: 0.000

Settings 0.000~65.535 sec

- When Pr.06-48 is 0, OPHL detection function will be disabled
- Status 1：Motor drive is in operation

  Any phase is less than Pr.06-47 setting level, and exceeds Pr.06-46 setting time, motor drive will perform Pr.06-45 setting.

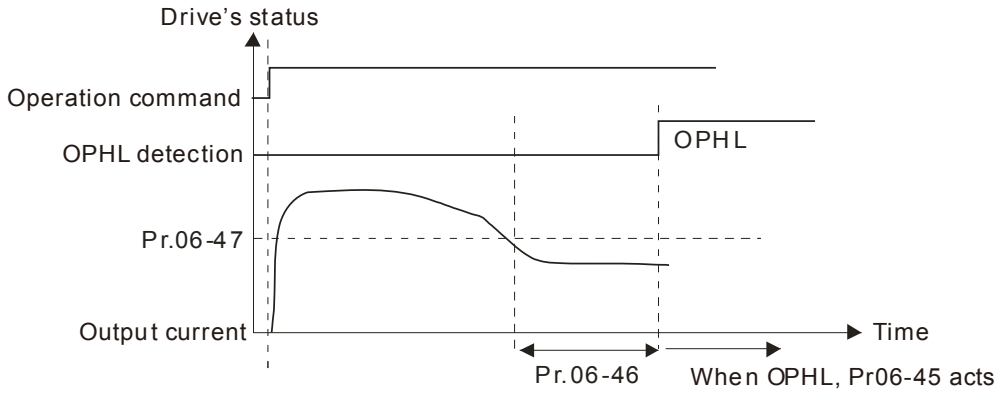

Status 2：Motor drive is in stop; Pr.06-48=0 ; Pr.07-02≠0

After motor drive starts, DC brake will be applied in accord to Pr.07-01 and Pr.07-02. During this period, OPHL detection will not be conducted. After DC brake, motor drive starts to run, and conducts the OPHL protection as mentioned in status 1.

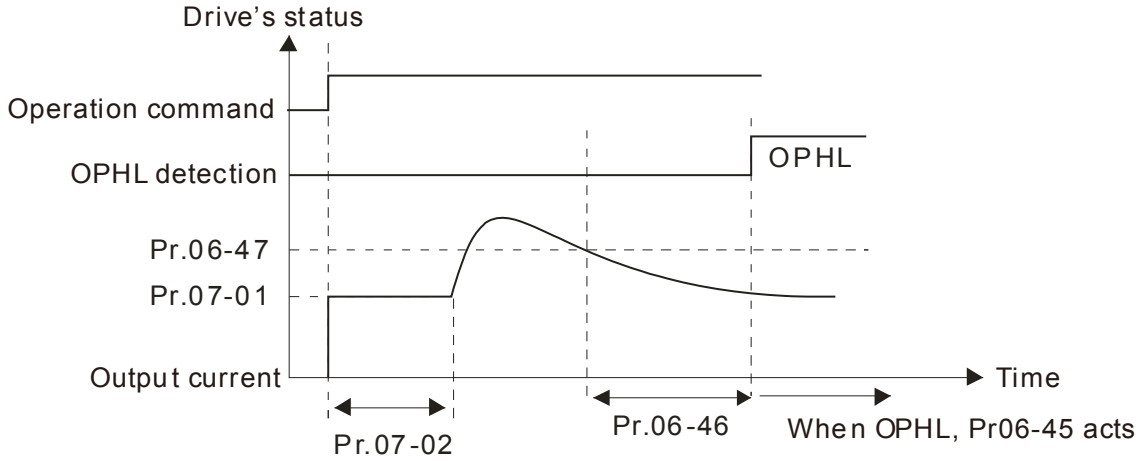


Status 3: Motor drive is in stop; Pr.06-48≠0 ; Pr.07-02≠0

When motor drive starts, it will perform Pr.06-48 and then Pr.07-02 (DC brake). DC brake current level in this status includes two parts, one is 20 times of Pr.06-47 setting value in Pr.06-48 setting time, and Pr.07-02 setting value in Pr.07-01 setting time. Total DC brake time is T=Pr.06-48+Pr.07-02.

In this period, if OPHL happens, motor drive starts to count Pr.06-48/2 time, motor drive will perform Pr.06-45 setting.

Status 3-1: Pr06-48≠0, Pr07-02≠0 (No OPHL detected before operation)

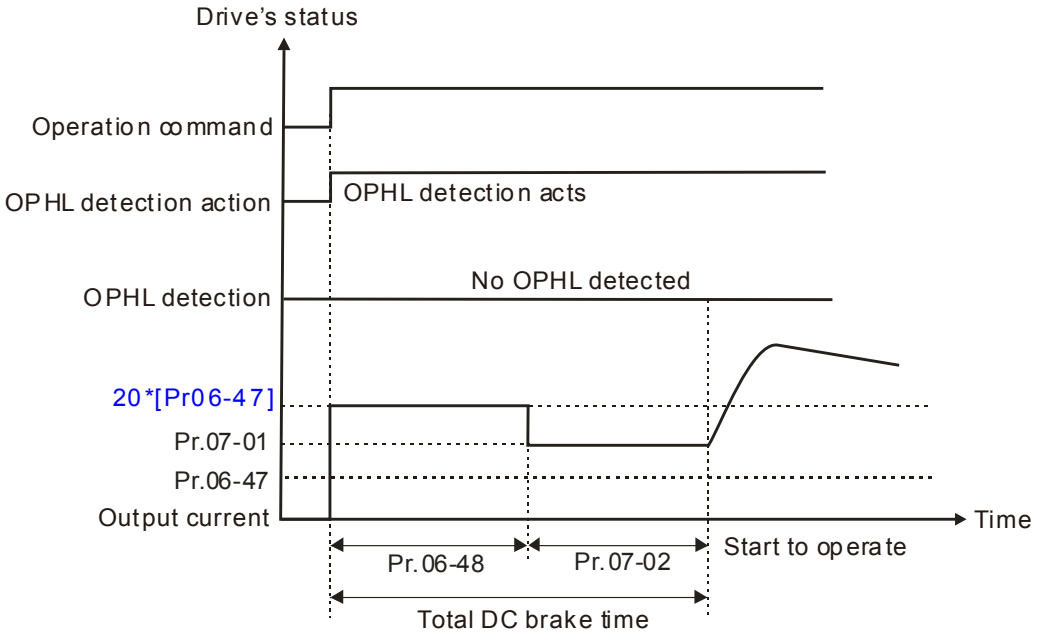

Status 3-2: Pr06-48≠0, Pr07-02≠0 (OPHL detected before operation)

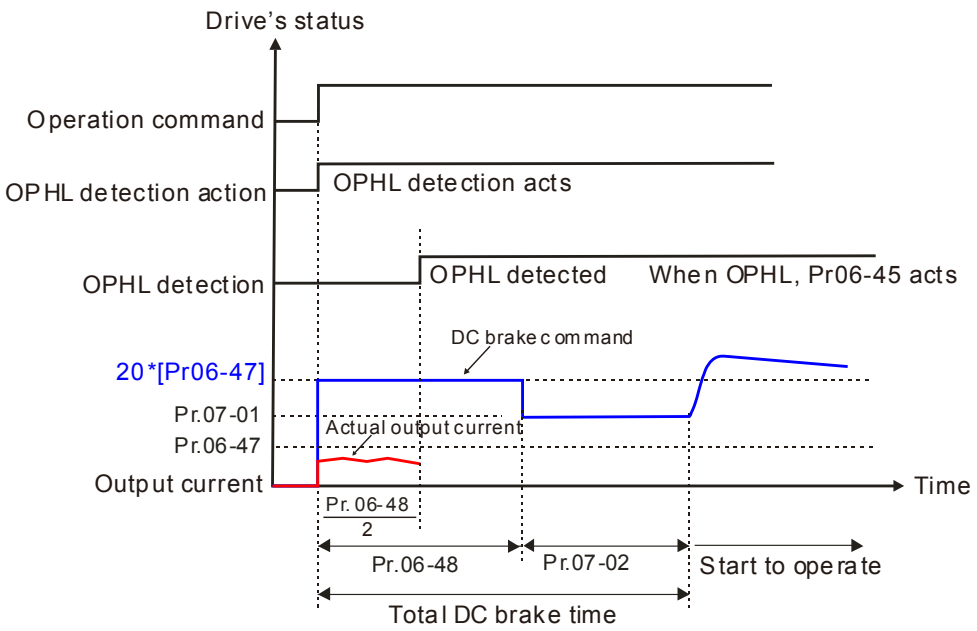


Status 4: Motor drive is in stop; Pr.06-48≠0 ; Pr.07-02=0

When motor drive starts, it will perform Pr.06-48 as DC brake. The DC brake current level is 20 times of Pr.06-47 setting value. In this period, if OPHL happens, motor drive starts to count Pr.06-48/2 time; motor drive will perform Pr.06-45 setting.

Status 4-1: Pr06-48≠0, Pr07-02=0 (No OPHL detected before operation)

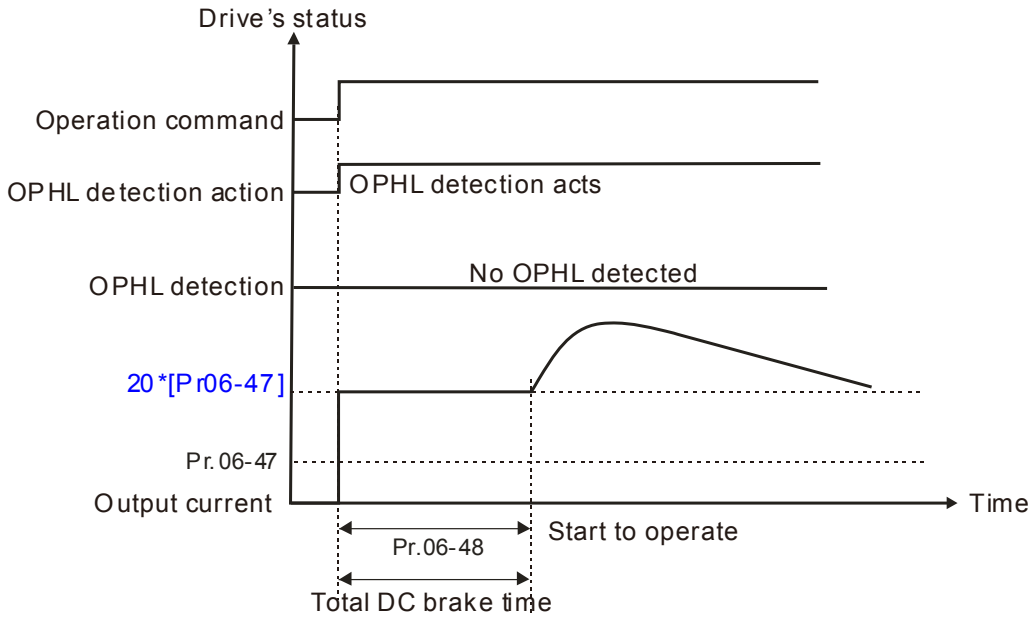

Status 4-2: Pr06-48≠0, Pr07-02=0 (OPHL detected before operation)

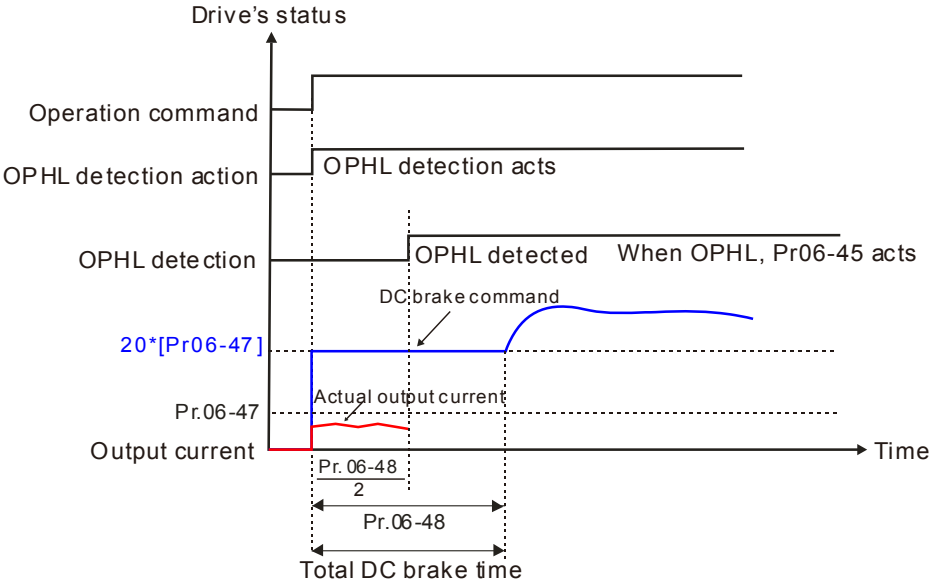


## 06-49 LvX Auto Reset

Factory Setting: 0

Settings 0: Disable
1: Enable

## 06-50 Time for Input Phase Loss Detection

Factory Setting:0.20

Settings 0.00~600.00 sec

Pr06-50 is time for input phase loss detection, pre-setting 0.20 sec represent check per every 0.20 sec.

## 06-52 Ripple of Input Phase Loss

Factory Setting:
30.0/60.0/75.0/90.0

Settings 230V series: 0.0~100.0VDC
460V series: 0.0~200.0VDC
575V series: 0.0~400.0VDC
690V series: 0.0~480.0VDC

When the DC BUS ripple is higher than Pr.06-52, and continue Pr.06-50 plus 30 seconds, drive will trip up OrP and act depending on the setting of Pr.06-53 to stop.

In the time period Pr.06-50 plus 30 seconds, if the DC BUS ripple is lower than Pr.06-52, the OrP protection counter will be restart.

## 06-53 Treatment for the detected Input Phase Loss （OrP）

Factory Setting: 0

Settings 0: warn, ramp to stop
1: warn, coast to stop

We can get DC BUS ripple voltage via Pr.06-50 ripple time，when the condition is satisfy, drive will according to Pr.06-53 settings:

- DC BUS ripple frequency≤166Hz
- The amplitude is higher than Pr.06-52 settings (default 60V), it will start to count time after 20 consecutive times.
- When continue the following conditions at the time,ORP will occur.

(I)% is rated current percentage

| (I)% | Actual seconds |
|---|---|
| 50 | 432 |
| 75 | 225 |
| 120 | 60 |

When any condition is not satisfied, the ORP protect function will be recalculated.

## 06-55 Derating Protection

Factory Setting: 0

Settings 0: constant rated current and limit carrier wave by load current and temperature

1: constant carrier frequency and limit load current by setting carrier wave

2: constant rated current(same as setting 0), but close current limit

Setting 0:

When the rated current is constant, carrier frequency (Fc) outputted by PWM will auto decrease according to surrounding temperature, overload output current and time. If overload situation is not frequent and only cares the carrier frequency operated with the rated current for a long time and carrier wave changes during short overload, it is recommended to set to 0.

Refer to the following diagram for the level of carrier frequency. Take VFD007C43A in normal duty as example, surrounding temperature 50ºC with independent installation and UL open-type. When the carrier frequency is set to 15kHz, it corresponds to 72% rated output current. When it outputs higher than the value, it will auto decrease the carrier frequency. If the output is 83% rated current and the carrier frequency will decrease to 12 kHz. In addition, it will also decrease the carrier frequency when overload. When the carrier frequency is 15 kHz and the current is 120%*72%=86% for a minute, the carrier frequency will decrease to the factory setting.

Setting 1:

It is used for the fixed carrier frequency and prevents the carrier wave changes and motor noise caused by the surrounding temperature and frequent overload.

Refer to the following for the derating level of rated current. Take VFD007C43A in normal duty as example, when the carrier frequency keeps in 15kHz and the rated current is decreased to 72%, it will have OL protection when the current is 120%*72%=86% for a minute. Therefore, it needs to operate by the curve to keep the carrier frequency.

Setting 2:

It sets the protection method and action to 0 and disables the current limit for the Ratio*160% of output current in the normal duty and Ratio*130% of output current in the light duty. The advantage is that it can provide higher output current when the setting is higher than

the factory setting of carrier frequency. The disadvantage is that it decreases carrier wave easily when overload.

- It should be used with Pr.00-16 and Pr.00-17 for setting.
- Ambient temperature will also affect the derating, please refer to ambient temperature derating curve.

Ambient Temperature derating Curve for General Control Model

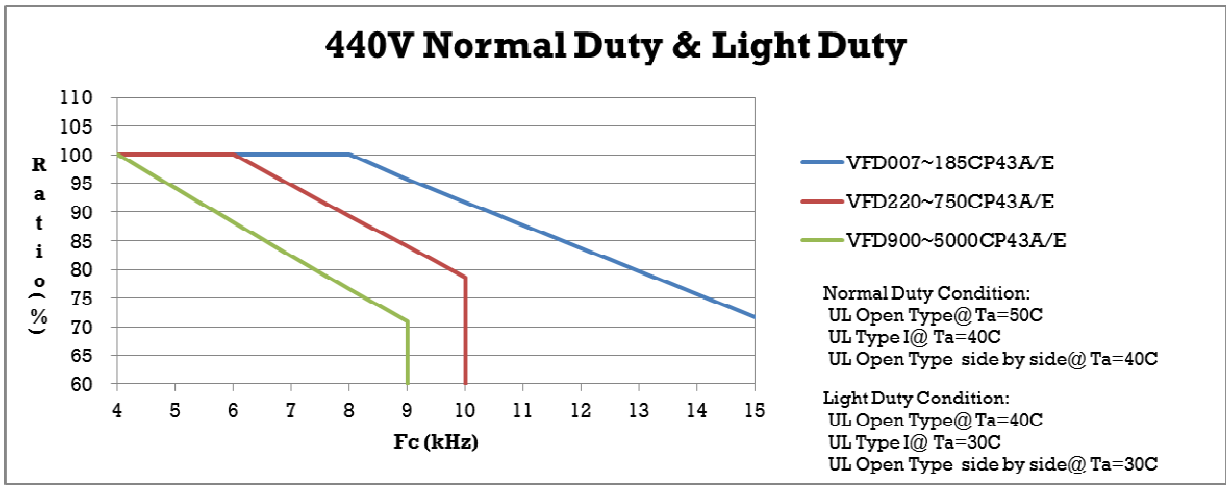


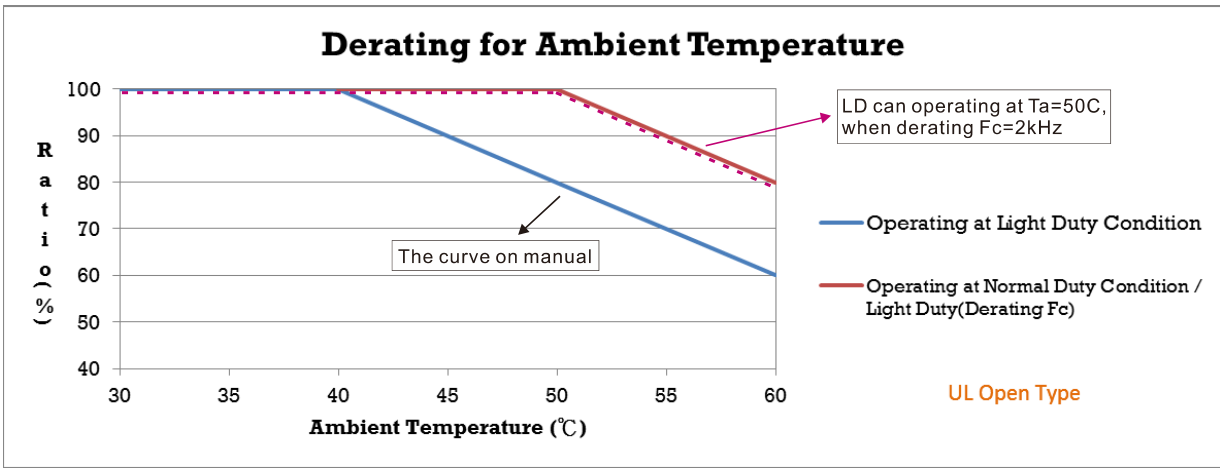


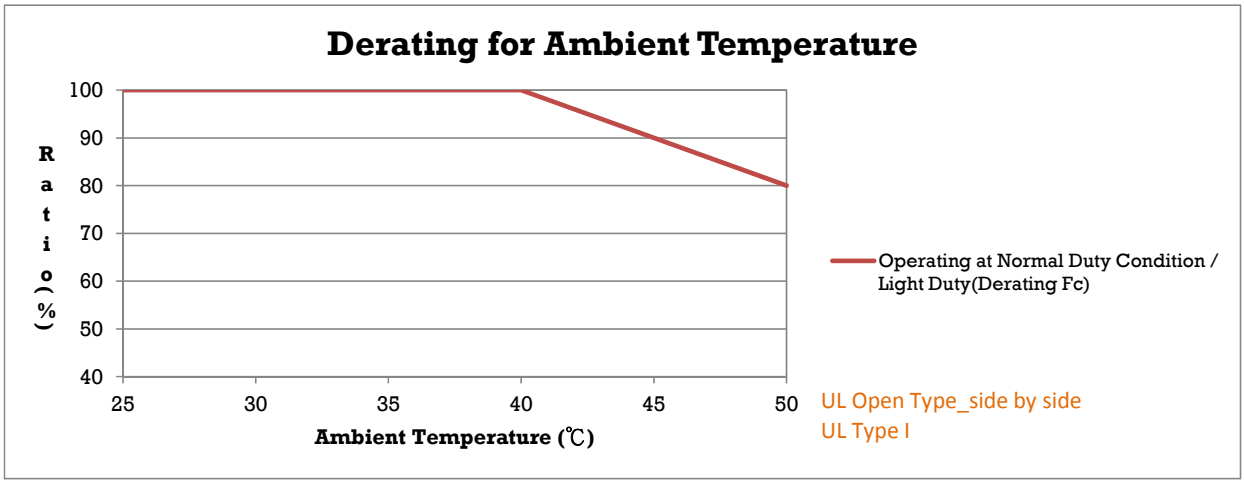


## 06-56 PT100 Detection Level 1

Factory Setting: 5.000

Settings 0.000~10.000V

## 06-57 PT100 Detection Level 2

Factory Setting: 7.000

Settings 0.000~10.000V

Make sure Pr. 06-57 > Pr.06-56.

## 06-58 PT100 Level 1 Frequency Protection

Factory Setting: 0.00

Settings 0.00~599.00 Hz

## 06-59 PT100 activation level delay time

Factory Setting: 60

Settings 0~6000 sec

PT100 operation

(1) Use AVI1, AVI2 or ACI (set to 0-10V) for analog voltage input and select PT100 mode.

(2) Choose one of the analog voltage input type: (a)AVI 1(Pr.03-00=11), (b) AVI2 (Pr.03-02=11), or (c) ACI (Pr.03-01=11 and Pr.03-29=1).

(3) When using ACI as analog voltage input, set Pr.03-01=11 and Pr.03-29=1. Then switch SW2 to 0-10V on the I/O control terminal block.

(4) Set Pr.03-23=23 and AFM2 to constant current output. Switch AFM2 (SW2) to 0-20mA on the I/O control terminal block and set constant current output to 9mA by setting Pr.03-33=45. The AFM2 constant output current is 20mA * 45% = 9mA.

(5) Pr.03-33 is for adjusting the constant voltage or constant current of AFM2, the setting range is 0~100.00%.

(6) There are two types of action level for PT100. The diagram of PT protecting action is shown as below:

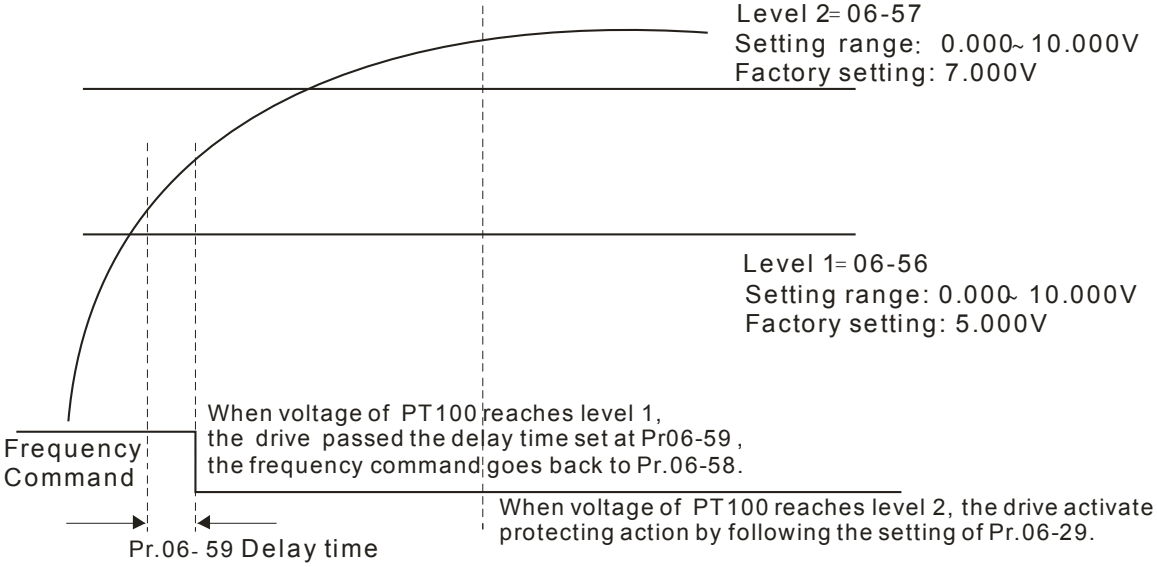

(7) PT100 wiring diagram:

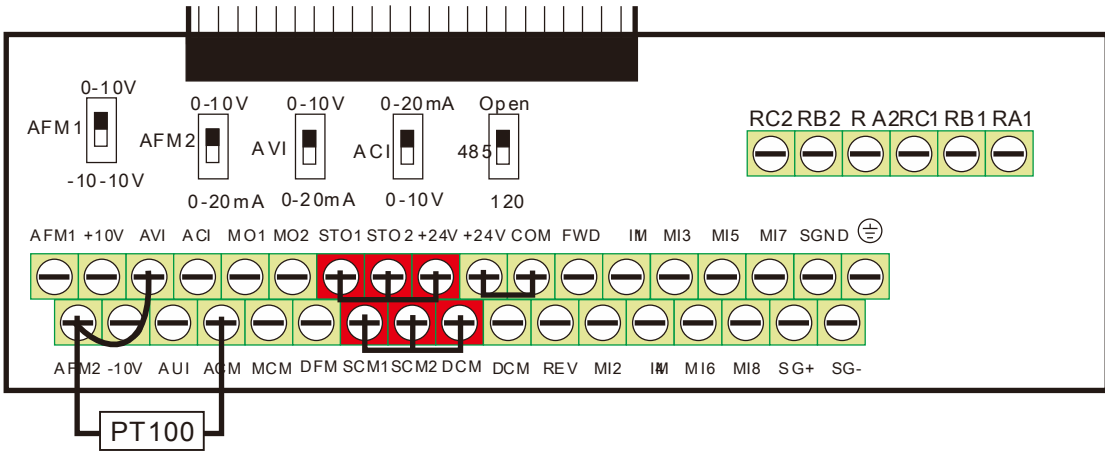


Figure 1

When Pr.06-58=0.00Hz, PT100 function is disabled.

Example:

A PT100 is installed to the drive. If motor temperature reaches 135ºC (275ºF) or higher, the drive will decrease motor frequency to the setting of Pr.06-58. Motor will operate at this frequency (Pr.06-58) till the motor temperature decreases to 135ºC (275ºF) or lower. If motor temperature exceeds 150ºC(302ºF), the motor will decelerate to stop and outputs an 'OH3' warning.

Set up process:

1. Switch AFM2 (SW2) to 0-20mA on the I/O control terminal block. (Refer to Figure 1, PT100 wiring diagram)
2. Wiring (Refer to Figure 1, PT100 wiring diagram):
   Connect external terminal AFM2 to (+)
   Connect external terminal ACM to (-)
   Connect external terminals AFM2 and AVI1 to short-circuit
3. Set Pr.03-00=11 or Pr.03-23=23 or Pr.03-33=45%(9mA)
4. Refer to RTD temperature and resistance comparison table
   Temperature=135ºC, resistance=151.71Ω;
   Input current: 9mA, Voltage: approximately: 1.37Vdc
   Temperature=150ºC, resistance=157.33Ω;
   Input current: 9mA, Voltage: approximately: 1.42Vdc
5. Set Pr.06=56=1.37 and Pr.06-58=10Hz. When RTD temperature increases to 135ºC or higher, the drive will decelerate to the selected frequency. When Pr.06-58=0, the drive will not run. Pr06-56=1.37; Pr06-58=10Hz.
6. Set Pr.06-57=1.42 and Pr.06-29=1 (warning and decelerate to stop). When RTD temperature increases to 150ºC or higher, the drive will decelerate to stop and outputs an 'OH3' warning. Pr06-57=1.42; Pr06-29=1.

## 06-60 Software Detection GFF Current Level

Factory Setting: 60.0

Settings 0.0~6553.5 %

| 06-61 | Software Detection GFF Filter Time |
|---|---|

Factory Setting: 0.10

Settings 0.00~655.3 sec

When 3-phase current output unbalance value has exceeds Pr.06-60 setting, drive will trip up GFF and stop output immediately.

| | |
|---|---|
| 06-63 | Fault Record 1 (day) |
| 06-65 | Fault Record 2 (day) |
| 06-67 | Fault Record 3 (day) |
| 06-69 | Fault Record 4 (day) |

Factory Setting: Read only

Settings 0~65535 days

| | |
|---|---|
| 06-64 | Fault Record 1 (min) |
| 06-66 | Fault Record 2 (min) |
| 06-68 | Fault Record 3 (min) |
| 06-70 | Fault Record 4 (min) |

Factory Setting: Read only

Settings 0~1439 min

When there is any malfunctions in motor drive operation, Pr.06-17~22 will record 6 malfunctions recently, and Pr.06-63~70 can record the operation time for 4 malfunctions in sequence. It can help to check if there is any wrong with the drive according to the recorded internal time.

For example:

The first error: ocA occurs in 1000 minutes after motor drive start operation. The second error: ocd happens after another 1000 minutes. The 4th error: ocA happens after another 1000 minutes. Then, the 5th error is ocd, happening 1000 minutes following 4th error. Last, 6th error ocn happens 1000 minutes after 5th error.

Then Pr.06-17~Pr.06-22 and Pr.06-63~Pr.06-70 will be:

| | 1st fault | 2nd fault | 3rd fault | 4th fault | 5th fault | 6th fault |
|---|---|---|---|---|---|---|
| 06-17 | ocA | ocd | ocn | ocA | ocd | ocn |
| 06-18 | 0 | ocA | ocd | ocn | ocA | ocd |
| 06-19 | 0 | 0 | ocA | ocd | ocn | ocA |
| 06-20 | 0 | 0 | 0 | ocA | ocd | ocn |
| 06-21 | 0 | 0 | 0 | 0 | ocA | ocd |
| 06-22 | 0 | 0 | 0 | 0 | 0 | ocA |
| | | | | | | |
| 06-63 | 0 | 1 | 2 | 2 | 3 | 4 |
| 06-64 | 1000 | 560 | 120 | 1120 | 680 | 240 |
| 06-65 | 0 | 0 | 1 | 2 | 2 | 3 |
| 06-66 | 0 | 1000 | 560 | 120 | 1120 | 680 |
| 06-67 | 0 | 0 | 0 | 1 | 2 | 2 |
| 06-68 | 0 | 0 | 1000 | 560 | 120 | 1120 |
| 06-69 | 0 | 0 | 0 | 0 | 1 | 2 |
| 06-70 | 0 | 0 | 0 | 1000 | 560 | 120 |

※ From time record, it can be known that the last fault (Pr.06-17) happened after the drive run for 4days and 240 minutes.

## 06-71 Low Current Setting Level

Factory Setting: 0.0

Settings 0.0~100.0 %

## 06-72 Low Current Detection Time

Factory Setting: 0.00

Settings 0.00~360.00 sec

## 06-73 Treatment for low current

Factory Setting: 0

Settings 0 : No function
1 : warn and coast to stop
2 : warn and ramp to stop by 2nd deceleration time
3 : warn and operation continue

- The drive will operate as the setting of Pr.06-73 when output current is lower than the setting of Pr.06-71 and when low current continues for a period longer than the setting of Pr.06-72. This parameter can also be used with external multi-function output terminal 44 (MO44) for low current output.
- The low current detection function will not be executed when drive is at sleep or standby status.
- The low current setting level of Pr06-71 is based on drive's rated current, Pr00-01(Motor Drive Rated Current)* Pr06-71(Low Current Setting Level)% = low current detection level(A). The setting of drive's rated current related to Pr00-16(Load Selection) to change Pr00-01(Motor Drive Rated Current).

## 06-76 dEb motion offset setting

| | | Factory Setting: |
|---|---|---|
| Settings | 230V series: 0.0~200.0VDC | 20.0 |
| | 460V series: 0.0~200.0VDC | 40.0 |
| | 575V series: 0.0~200.0VDC | 50.0 |
| | 690V series: 0.0~200.0VDC | 60.0 |

## 06-80 Fire Mode

Factory Setting: 0.00

Settings 0: Disable
1: Forward Operation
2: Reverse Operation

## 06-81 Operating Frequency when running Fire Mode

Factory Setting: 60.00

Settings 0.00 ~ 599.00 Hz

- This parameter is to set up the drive's frequency when the fire mode is enabled.

## 06-82 Enable Bypass on Fire Mode

Factory Setting: 0

Settings 0: Disable Bypass
1: Enable Bypass

## 06-83 Bypass Delay Time on Fire Mode

Factory Setting: 0.0

Settings 0.0 ~ 6550.0 seconds

## 06-84 Number of Times of Unusual Reset at Fire Mode

Factory Setting: 0

Settings 0 ~ 10

## 06-85 Length of Time of Unusual Reset

Factory Setting: 60.0

Settings 0.00 ~ 6000.0sec

The settings of Pr.06-82 to Pr.06-85 decide if switch motors to operating under mains electricity.

Diagram of Bypass function's Sequence

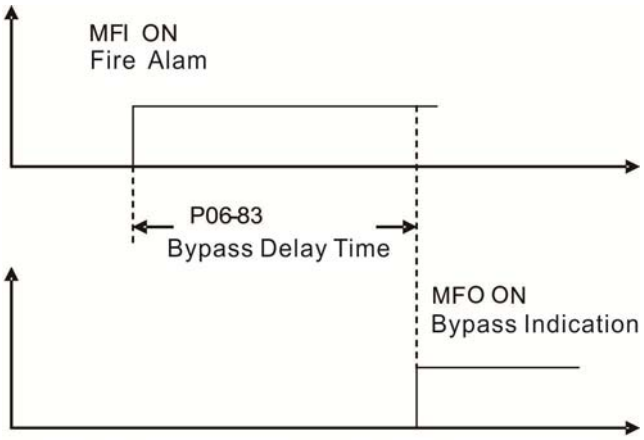


Figure: Activation Sequence of Bypass Function

Conditions is required to enable the bypass function

When Pr.06-82 is set to 1, there is one of two conditions as below.

(1) When operating at fire mode, there is error (as shown in the table below) and the fire alarm rings according to the time setting of Pr.06-83, then the bypass function will be enabled. MFO bypass indication will be ON.

(2) When operating at fire mode, there is an error on auto-reset and the number of time to auto-reset remains zero or the fire alarm rings according to the time setting of Pr.06-83, then the bypass function will be enabled. MFO bypass indication will be ON. If the auto rest is successful before the bypass function is enabled, then the bypass delay counter will return to zero to wait for next trigger.

**Table 1: Error detection under Normal mode, Fire mode and Bypass function at Fire mode. (V means detectable)**

| Code | Error name | Normal mode | Fire Mode | Enable bypass function |
|---|---|---|---|---|
| 1 | Over current during Acceleration (ocA) | V(RS) | V(able to auto-reset) | V |
| 2 | Over current during deceleration (ocd) | V(RS) | V(able to auto-reset) | V |
| 3 | Over current during normal speed (ocn) | V(RS) | V(able to auto-reset) | V |
| 4 | Ground Fault (GFF) | V | V(able to auto-reset) | V |
| 5 | IGBT short circuit (occ) | V(RS) | V(able to auto-reset) | V |
| 6 | Over current during Stop (ocS) | V(RS) | V(able to auto-reset) | V |
| 7 | Over voltage during Acceleration (ovA) | V(RS) | V(able to auto-reset) | V |
| 8 | Over voltage during deceleration (ovd) | V(RS) | V(able to auto-reset) | V |
| 9 | Over voltage during normal speed (ovn) | V(RS) | V(able to auto-reset) | V |
| 10 | Over voltage during Stop (ovS) | V(RS) | V(able to auto-reset) | V |
| 11 | Low voltage during Acceleration (LvA) | V | Not-detectable | Not-detectable |
| 12 | Low voltage during deceleration (Lvd) | V | Not-detectable | Not-detectable |
| 13 | Low voltage during normal speed (Lvn) | V | Not-detectable | Not-detectable |
| 14 | Low voltage during Stop (LvS) | V | Not-detectable | Not-detectable |
| 15 | Input phase loss (OrP) | V | V(able to auto-reset) | V |
| 16 | Over heat 1 (oH1) | V | V(able to auto-reset) | V |
| 17 | Over heat 2 (oH2) | V | V(able to auto-reset) | V |
| 18 | Thermister 1 open (tH1o) | V | V(able to auto-reset) | V |
| 19 | Thermister 2 open (tH2o) | V | V(able to auto-reset) | V |
| 21 | Over Load (oL) (150% 1Min, Inverter) | V | Not-detectable | Not-detectable |
| 22 | Motor 1 over load (EoL1) | V | Not-detectable | Not-detectable |
| 23 | Motor 2 over load (EoL2) | V | Not-detectable | Not-detectable |
| 24 | Over heat 3 (oH3) | V | V(able to auto-reset) | V |
| 26 | Over torque 1 (ot1) | V | Not-detectable | Not-detectable |
| 27 | Over torque 2 (ot2) | V | Not-detectable | Not-detectable |
| 28 | Low current (uC) | V | Not-detectable | Not-detectable |
| 30 | EEPROM write error (cF1) | V | Not-detectable | Not-detectable |
| 31 | EEPROM read error (cF2) | V | V | Not-detectable |
| 33 | U phase current sensor detection error (cd1) | V | V | Not-detectable |
| 34 | V phase current sensor detection error (cd2) | V | V | Not-detectable |
| 35 | W phase current sensor detection error (cd3) | V | V | Not-detectable |
| 36 | Hardware Logic error 0 (Hd0) - cc | V | V | Not-detectable |
| 37 | Hardware Logic error 1 (Hd1) - oc | V | V | Not-detectable |
| 38 | Hardware Logic error 2 (Hd2) - ov | V | V | Not-detectable |

| Code | Error name | Normal mode | Fire Mode | Enable bypass function |
|---|---|---|---|---|
| 39 | Hardware Logic error 3 (Hd3) – occ | V | V | Not-detectable |
| 40 | Motor auto tuning error (AUE) | V | Not-detectable | Not-detectable |
| 41 | ACI feedback loss (AFE) | V | Not-detectable | Not-detectable |
| 48 | ACI Loss (ACE) | V | Not-detectable | Not-detectable |
| 49 | External fault (EF) | V | Not-detectable | Not-detectable |
| 50 | Emergency stop (EF1) | V | Not-detectable | Not-detectable |
| 51 | base block (bb) | V | Not-detectable | Not-detectable |
| 52 | PcodE (Password) | V | Not-detectable | Not-detectable |
| 53 | Software code error (ccod) | V | V | Not-detectable |
| 54 | Communication error 1 (CE1) | V | Not-detectable | Not-detectable |
| 55 | Communication error 2 (CE2) | V | Not-detectable | Not-detectable |
| 56 | Communication error 3 (CE3) | V | Not-detectable | Not-detectable |
| 57 | Communication error 4 (CE4) | V | Not-detectable | Not-detectable |
| 58 | Communication Time Out (CE10) | V | Not-detectable | Not-detectable |
| 59 | Communication time out (CP10) | V | Not-detectable | Not-detectable |
| 60 | Braking Transistor Fault (bF) | V | Not-detectable | Not-detectable |
| 61 | Y-Delta connected Error (ydc) | V | Not-detectable | Not-detectable |
| 62 | Decel. Energy Backup Error (dEb) | V | Not-detectable | Not-detectable |
| 63 | Over Slip Error (oSL) | V | Not-detectable | Not-detectable |
| 64 | Electromagnet switch error (ryF) | V | Not-detectable | Not-detectable |
| 72 | Channel 1 (STO1~SCM1) internal hardware error (STL1) | V | Not-detectable | Not-detectable |
| 73 | External safety gate S1 | V | V | Not-detectable |
| 74 | Fire Mode output (Fire) | V | V(keeps on operating) | V(keeps on operating) |
| 76 | Safety Torque Off (STO) | V | Not-detectable | Not-detectable |
| 77 | Channel 2 (STO2~SCM2) internal hardware error (STL2) | V | Not-detectable | Not-detectable |
| 78 | Channel 1 and Channel 2 internal hardware error (STL3) | V | Not-detectable | Not-detectable |
| 79 | U phase over current (Uocc) | V | V(able to auto-reset) | V |
| 80 | V phase over current (Vocc) | V | V(able to auto-reset) | V |
| 81 | W phase over current (Wocc) | V | V(able to auto-reset) | V |
| 82 | OPHL U phase output phase loss | V | V(able to auto-reset) | V |
| 83 | OPHL V phase output phase loss | V | V(able to auto-reset) | V |
| 84 | OPHL W phase output phase loss | V | V(able to auto-reset) | V |
| 90 | Inner PLC function is forced to stop (FStp) | V | Not-detectable | Not-detectable |
| 99 | CPU Trap error (TRAP) | V | V | Not-detectable |

| Code | Error name | Normal mode | Fire Mode | Enable bypass function |
|---|---|---|---|---|
| 101 | CGdE CANopen software disconnect1 | V | Not-detectable | Not-detectable |
| 102 | CHbE CANopen software disconnect2 | V | Not-detectable | Not-detectable |
| 103 | CSYE CANopen synchronous error | V | Not-detectable | Not-detectable |
| 104 | CbFE CANopen hardware disconnect | V | Not-detectable | Not-detectable |
| 105 | CIdE CANopen index setting error | V | Not-detectable | Not-detectable |
| 106 | CAdE CANopen slave station number setting error | V | Not-detectable | Not-detectable |
| 107 | CFrE CANopen index setting exceed limit | V | Not-detectable | Not-detectable |
| 111 | InrCOM Internal communication overtime error | V | Not-detectable | Not-detectable |

## 06-86 Fire mode motion

Factory Setting: 0

Settings 0: Open loop control & manual reset fire mode
1: Close loop control & manual reset fire mode
2: Open loop control & auto reset fire mode
3: Close loop control & auto reset fire mode

## 06-87 Fire mode PID set point

Factory Setting: 0.00

Settings 0.00~100.00%

# 07 Special Parameters

✎ This parameter can be set during operation.

## ✎ 07-00 Software Brake Level

Factory Setting:
380.0/760.0/895.0/1057.0

Settings 230V series: 350.0~450.0VDC
460V series: 700.0~900.0VDC
575V series: 850.0~1116.0VDC
690V series: 939.0~1318.0VDC

- This parameter sets the DC-bus voltage at which the brake chopper is activated. Users can choose the suitable brake resistor to have the best deceleration. Refer to Chapter 7 Accessories for the information of the brake resistor.
- It is only valid for the models below 22kW of 230 series and 30kW of 460 series.

## ✎ 07-01 DC Brake Current Level

Factory Setting: 0

Settings 0~100%

- This parameter sets the level of DC Brake Current output to the motor during start-up and stopping. When setting DC Brake Current, the Rated Current is regarded as 100%. It is recommended to start with a low DC Brake Current Level and then increase until proper holding torque has been attained.

## ✎ 07-02 DC Brake Time at RUN

Factory Setting: 0.0

Settings 0.0~60.0 sec

- The motor may be in the rotation status due to external force or itself inertia. If the drive is used with the motor at this moment, it may cause motor damage or drive protection due to over current. This parameter can be used to output DC current before motor operation to stop the motor and get a stable start. This parameter determines the duration of the DC Brake current after a RUN command. When it is set to 0.0, it is invalid.

## ✎ 07-03 DC Brake Time at Stop

Factory Setting: 0.0

Settings 0.0~60.0 sec

- The motor may be in the rotation status after drive stop outputting due to external force or itself inertia and can’t stop accurately. This parameter can output DC current to force the motor drive stop after drive stops to make sure that the motor is stop.
- This parameter determines the duration of the DC Brake current during stopping. To DC brake at stop, this function will be valid when Pr.00-22 is set to 0 or 2. When setting to 0.0, it is invalid.
- Related parameters: Pr.00-22 Stop Method, Pr.07-04 Start-point for DC Brake.

## 07-04 DC Brake Frequency at STOP

Factory Setting: 0.00

Settings 0.00~599.00Hz

This parameter determines the frequency when DC Brake will begin during deceleration. When this setting is less than start frequency (Pr.01-09), the start-point for DC brake will start from the min. frequency.

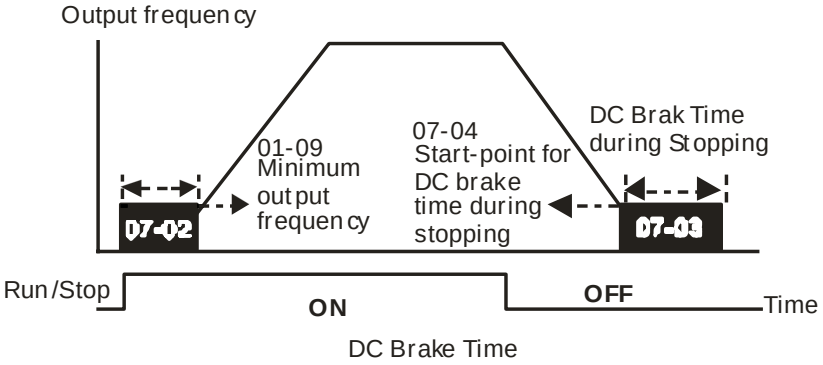


DC Brake at Start-up is used for loads that may move before the AC drive starts, such as fans and pumps. Under such circumstances, DC Brake can be used to hold the load in position before setting it in motion.

DC Brake at stop is used to shorten the stopping time and also to hold a stopped load in position, such as crane or cutting machine.

## 07-05 Voltage Increasing Gain

Factory Setting: 100

Settings 1~200%

When the user is using speed tracking, adjust Pr07-05 to slow down the increasing of voltage if there are errors such as oL or oc.

## 07-06 Restart after Momentary Power Loss

Factory Setting: 0

Settings 0: Stop operation
1: Speed search for last frequency command
2: Speed search for the minimum output frequency

This parameter determines the operation mode when the AC motor drive restarts from a momentary power loss.

The power connected to the drive may power off momentarily due to many reasons. This function allows the drive to keep outputting after power is on again after power off and won't cause drive stops.

Setting 1: Operation continues after momentary power loss, speed search starts with the Master Frequency reference value after drive output frequency and motor rotator speed is synchronous. The motor has the characteristics of big inertia and small obstruction. For example, in the equipment with big inertia wheel, it doesn't need to wait to execute operation command until wheel is complete stop after re-start to save time.

- Setting 2: Operation continues after momentary power loss, speed search starts with the minimum output frequency after drive output frequency and motor rotator speed is synchronous. The motor has the characteristics of small inertia and bigger obstruction.
- This function is valid when the Run command is present.

## 07-07 Maximum Power Loss Duration

Factory Setting: 2.0

Settings 0.0~20.0 sec

- If the duration of a power loss is less than this parameter setting, the AC motor drive will resume operation. If it exceeds the Maximum Allowable Power Loss Time, the AC motor drive output is then turned off (coast stop).
- The selected operation after power loss in Pr.07-06 is only executed when the maximum allowable power loss time is ≤ 5 seconds and the AC motor drive displays “LU”.
- But if the AC motor drive is powered off due to overload, even if the maximum allowable power loss time is ≤ 5 seconds, the operation mode as set in Pr.07-06 is not executed. In that case it starts up normally.

## 07-08 Base block Time

Factory Setting: 0.5

Settings 0.1~5.0 sec

- When momentary power loss is detected, the AC drive will block its output and then wait for a specified period of time (determined by Pr.07-08, called Base-Block Time) before resuming operation. This parameter should be set at a value to ensure that any residual regeneration voltage from the motor on the output has disappeared before the drive is activated again.

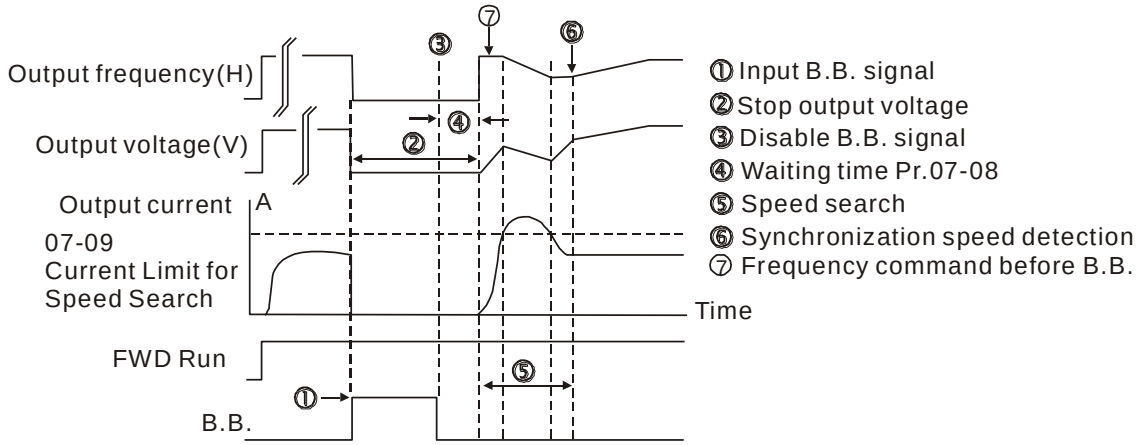


B.B. Search with last output frequency downward timing chart

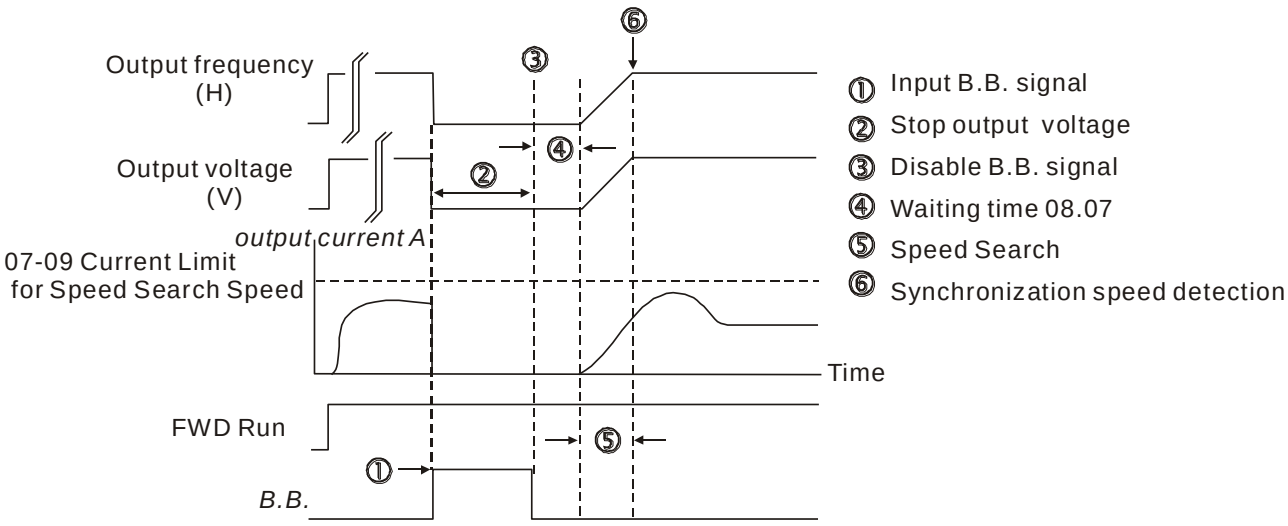


B.B. Search with minimum output frequency upward timing chart

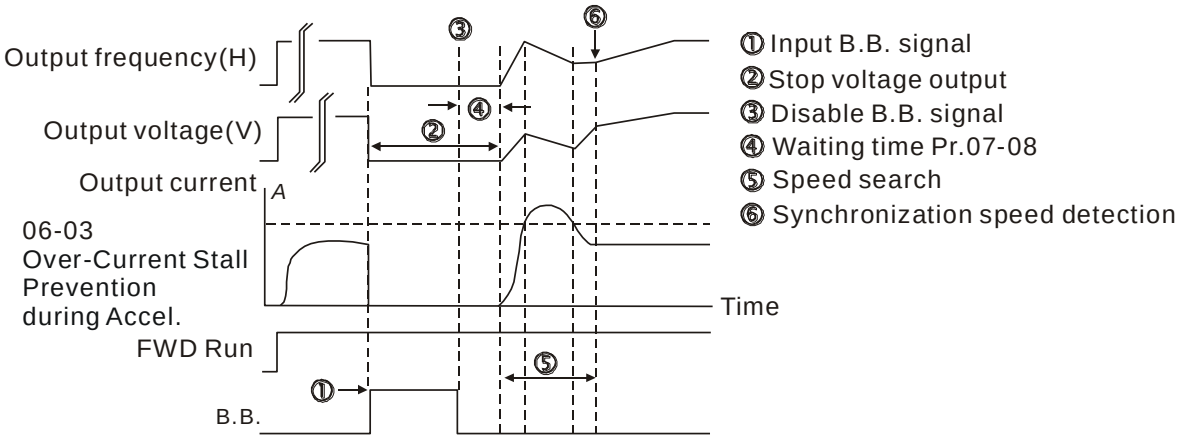


B.B. Search with minimum output frequency upward timing chart

## 07-09 Current Limit for Speed Search

Factory Setting: 100

Settings 20~200%

- Following a momentary power loss, the AC motor drive will start its speed search operation only if the output current is greater than the value set by Pr.07-09.
- The maximum speed search level will affect the synchronous time. It will get the synchronization faster when this parameter is set to larger value. But too large value may activate overload protection.

## 07-10 Treatment after Fault

Factory Setting: 0

Settings 0: Stop operation
1: Speed search starts with current speed
2: Speed search starts with minimum output frequency

- Fault includes: bb, oc, ov, and occ. To restart after oc, ov, occ, Pr.07-11 can not be set to 0.

## 07-11 Auto Restart Time after Fault

Factory Setting: 0

Settings 0~10

- After fault (oc, ov, and occ) occurs, the AC motor drive can be reset/restarted automatically up to 10 times.
- Setting this parameter to 0 will disable the reset/restart operation after any fault has occurred. When enabled, the AC motor drive will restart with Pr07-10 setting after fault auto reset.
- If the time of reset/restart exceeds Pr.07-11 setting, the fault will not be restart /reset until user reset manually and run the motor drive again.

## 07-12 Speed Search during Start-up

Factory Setting: 0

Settings 0: Disable
1: Speed search from maximum output frequency
2: Speed search from start-up motor frequency
3: Speed search from minimum output frequency

- This parameter is used for starting and stopping a motor with a high inertia. A motor with high inertia will take 2-5 minutes or longer to stop completely. By setting this parameter, the user does not need to wait for the motor to come to a complete stop before restarting the AC motor drive. The output current is set by the Pr.07-09.

## 07-13 dEb Function Selection

Factory Setting: 0

Settings 0: Disable
1: dEb with auto accel./decal., the output frequency will not return after power reply.
2: dEb with auto accel./decal., the output frequency will return after power reply

- This function is the AC motor drive decelerates to stop after momentary power loss. When the momentary power loss occurs, this function can be used for the motor to decelerate to zero speed with deceleration stop method. When the power is on again, motor will run again after DEB return time. (has applied on high-speed spindle)
- Lv return level: default value differs by the motor drive's power model
  Frame A, B, C, D = P06-00 + 60V/30V (230V models)
  Frame E and above = P06-00 + 80V/40V (230V models)
- Lv level：default =Pr06-00
- During the dEb, the drive can also be protected by ryF, ov, oc, occ, EF…etc. and those error codes will be recorded.
- During the dEb deceleration time, the STOP (RESET) command will be ineffective. If the motor drive needs to coast to stop, use another function such as EF.
- During the dEb time, the "BB" function is ineffective until dEb is disabling.

- Even the Lv warning does not appear during dEb time, but the MO=10 “Low voltage warning” will be activated if the DCBUS voltage is lower than the Lv level.
- dEb actions are illustrated as below

  When the DCBUS voltage drops to a level which is smaller than the dEb activation level, the dEb function will be activated (the soft start relay is close) and the motor drive will begin the auto-deceleration.

- Situation 1: Insufficient power supply due to momentary power-loss/unstable power (due to low voltage)/sudden heavy-load
  1. Pr07-13=1 “dEb with auto accel./decal., the output frequency will not return after power restore” and power restore.
  2. When the power restores and DCBUS voltage is higher than the “dEb return level”, the drive will automatically switch from coast stop to ramp stop until 0Hz and stop. The keypad will display “dEb” warning until manually reset and this can avoid that users do not know the reason for stopping.

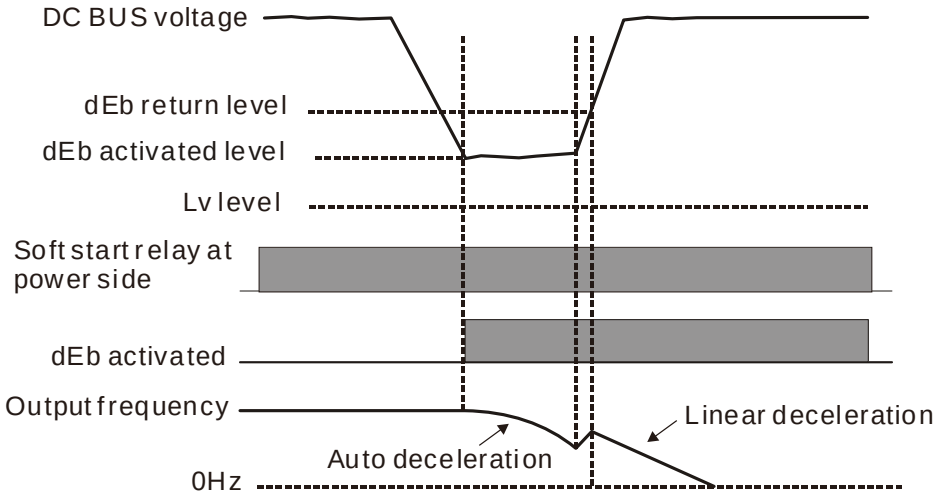


- Situation 2: Insufficient power supply due to momentary power-loss/unstable power (due to low voltage)/sudden heavy-load
  1. Pr07-13=2 “dEb with auto accel./decal., the output frequency will return after power restore” and power restore
  2. During the dEb deceleration time (include 0hz run), if the power restore and DCBUS voltage has higher than “dEb return level”, the drive will maintain the current frequency for 3 seconds and restart to accelerated, the dEb warning show on the keypad will then cleared automatically.

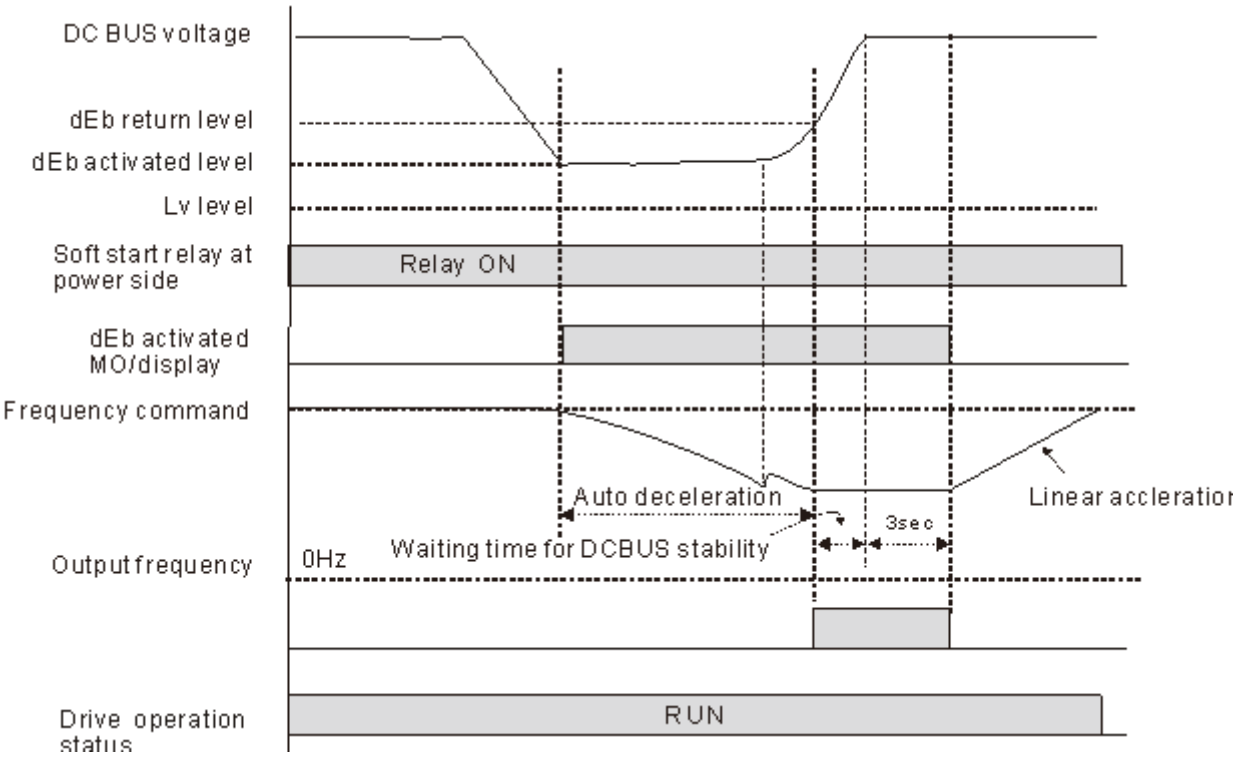


- Situation 3: Power supply unexpected shut down/power loss
  1. Pr07-13=1" dEb with auto accel./decal., the output frequency will not return after power restore" and power will not restore.
  2. The keypad will display "dEb" warning and decelerated to 0Hz and stop. When the DCBUS voltage has smaller than Lv level, the drive internal soft-start relay turn off and until drive is completely out of power.

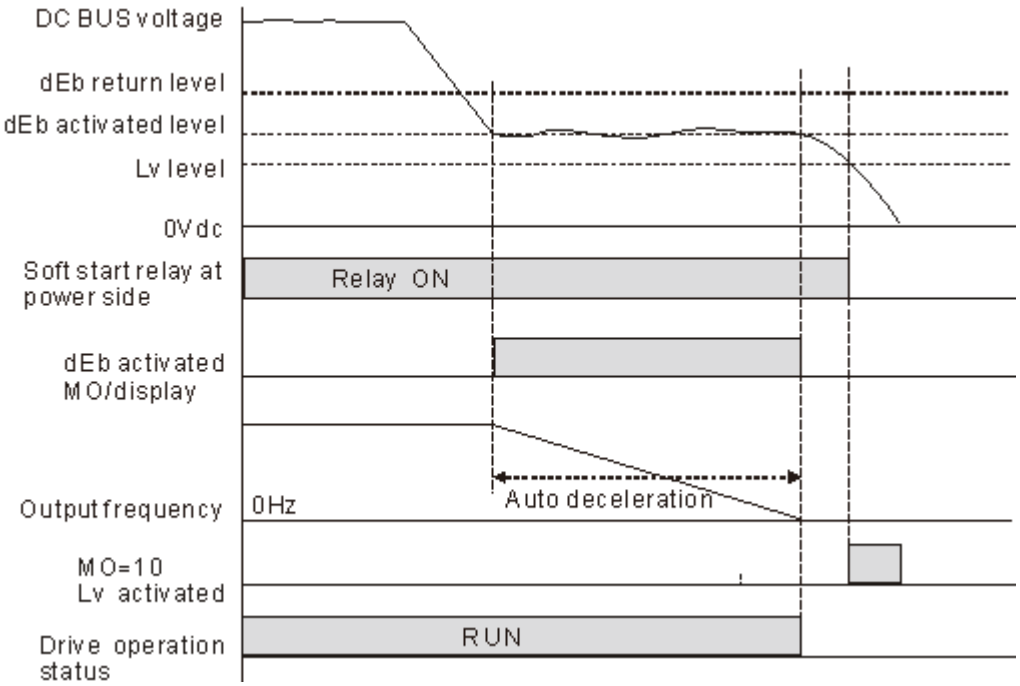

- Situation 4:
  1. Pr07-13=2 “dEb with auto accel./decal., the output frequency will return after power restore” and power will not restore.
  2. Same as the situation 3, the drive will decelerate to 0Hz. The DCBUS voltage will continue to reduce until the voltage is less than Lv level and drive internal soft-start relay turn-off. The keypad will display “dEb” warning until drive is completely out of power.

- Situation 5:
  1. Pr07-13=2 “dEb with auto accel./decal., the output frequency will return after power restore” and Power will restore after DCBUS voltage has smaller than Lv level.
  2. The drive decelerates to 0Hz and DCBUS voltage continue to reduce until the voltage is less than Lv level, drive internal soft-start relay turn-off. When the power restore and DCBUS voltage has higher than LV return level, the soft-start relay turn-on. When the DCBUS voltage has higher than dEb return level, waiting for DCBUS stability, the drive will maintain the current frequency for 3 seconds and restart to do linear accelerate, the dEb warning show on the keypad will cleared up automatically.

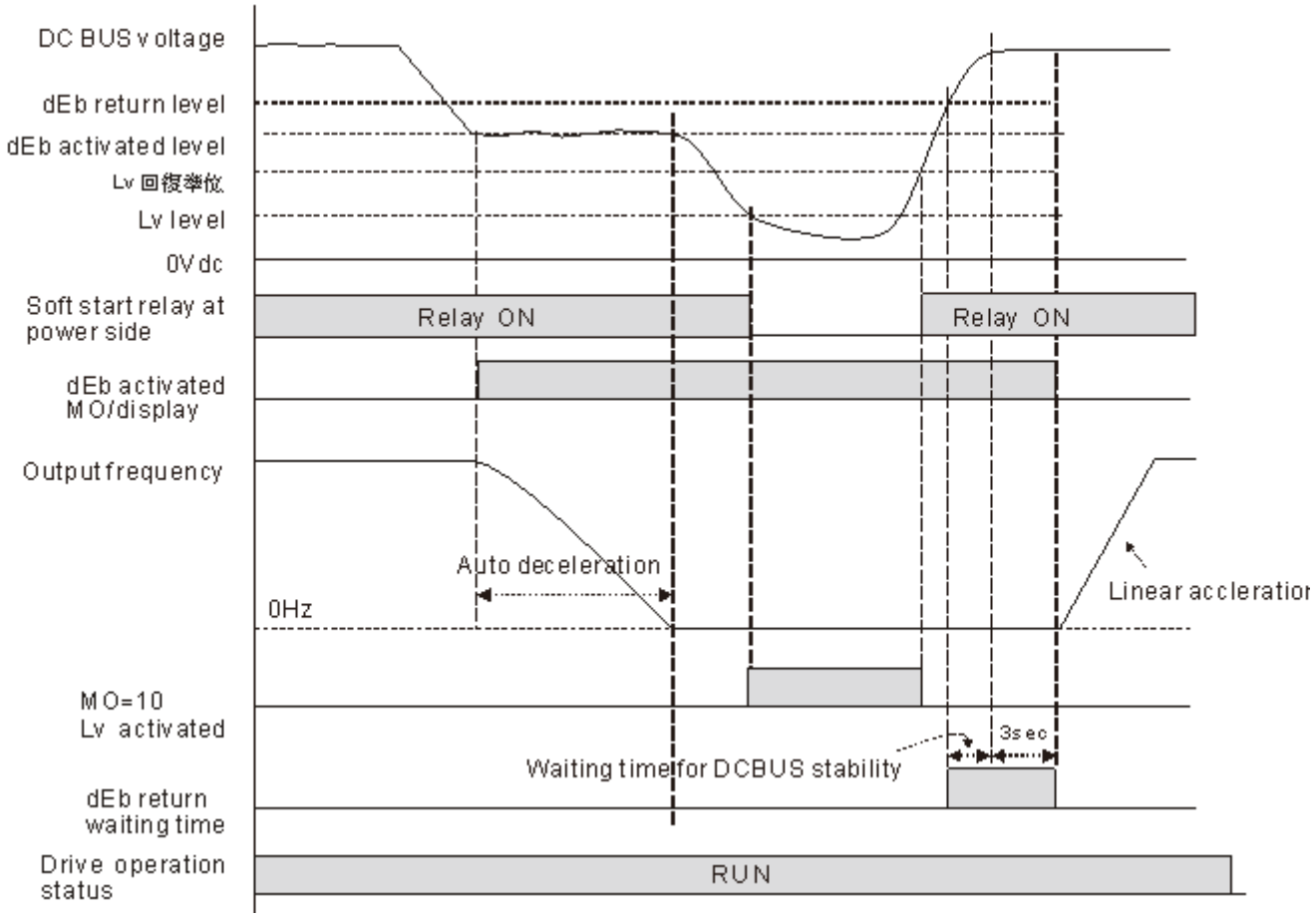

## 07-15 Dwell Time at Accel.

Factory Setting: 0.00

Settings 0.00~600.00 sec

## 07-16 Dwell Frequency at Accel.

Factory Setting: 0.00

Settings 0.00~599.00Hz

## 07-17 Dwell Time at Decel.

Factory Setting: 0.00

Settings 0.00~600.00 sec

## 07-18 Dwell Frequency at Decel.

Factory Setting: 0.00

Settings 0.00~599.00 Hz

- In the heavy load situation, Dwell can make stable output frequency temporarily, such as crane or elevator.
- Pr.07-15 to Pr.07-18 is for heavy load to prevent OV or OC occurs.

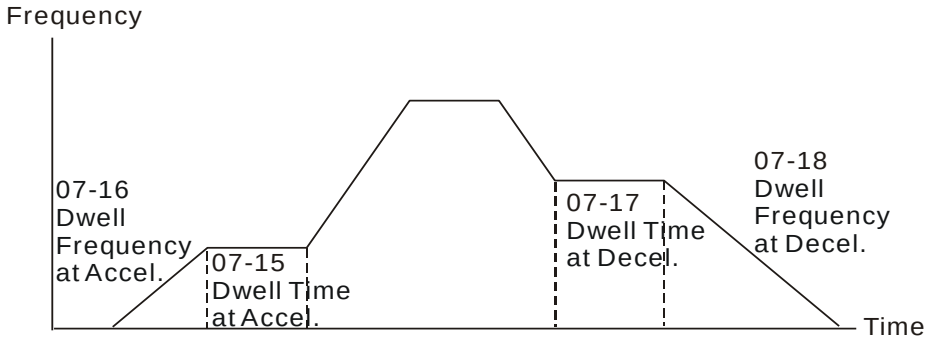


Dwell at accel./decel.

## 07-19 Fan Cooling Control

Factory Setting: 0

Settings
- 0: Fan always ON
- 1: 1 minute after the AC motor drive stops, fan will be OFF
- 2: When the AC motor drive runs, the fan is ON. When the AC motor drive stops, the fan is OFF
- 3: Fan turns ON when preliminary IGBT temperature (around 60ºC) is attained.
- 4: Fan always OFF

- This parameter is used for the fan control.
- Setting 0: Fan will be ON as the drive's power is turned ON.
- Setting 1: 1 minute after AC motor drive stops, fan will be OFF
- Setting 2: AC motor drive runs and fan will be ON. AC motor drive stops and fan will be OFF.
- Setting 3: Fan run according to IGBT and capacitance temperature. Fan will be ON when IGBT temperature is higher than 60ºC. Fan will be OFF, when capacitance temperature is lower than 40ºC.
- Setting 4: Fan is always OFF

## 07-20 Emergency Stop (EF) & Force Stop

Factory Setting: 0

Settings
0: Coast to stop
1: Stop by 1st deceleration time
2: Stop by 2nd deceleration time
3: Stop by 3rd deceleration time
4: Stop by 4th deceleration time
5: System Deceleration (According to original deceleration time)
6: Automatic Deceleration ( Pr01-46)

When the multi-function input terminal is set to 10(EF) or 18(Emergency stop) and is activated, the drive will stop according to the setting in Pr.07-20.

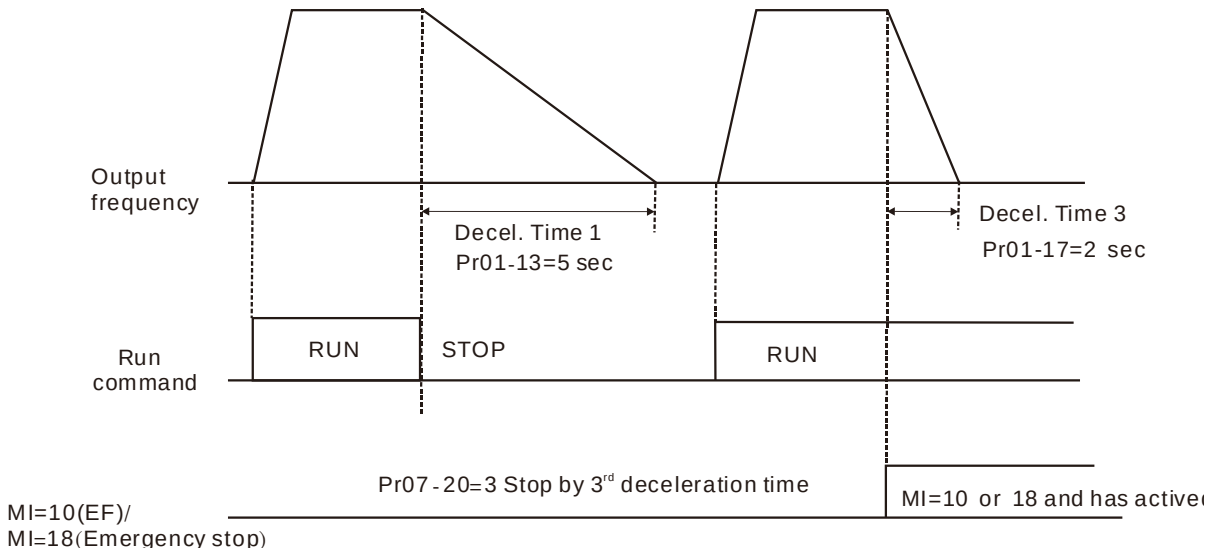


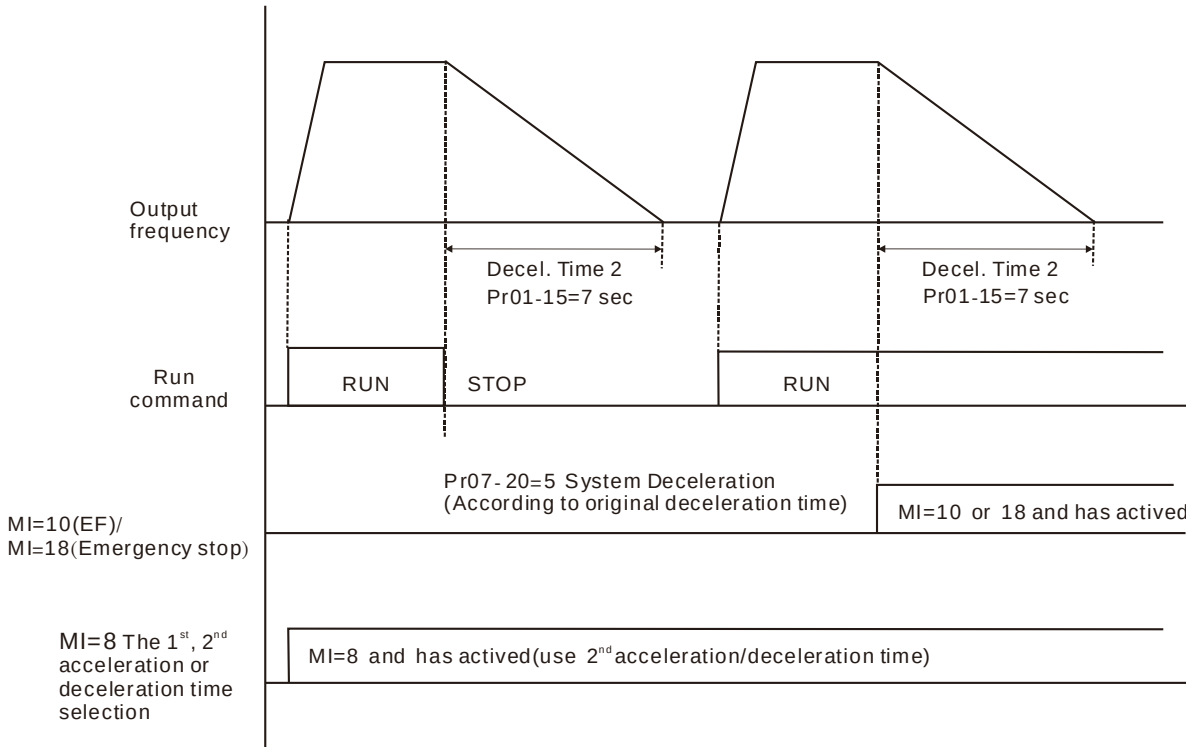

## 07-21 Auto Energy-saving Operation

Factory Setting: 0

Settings 0: Disable
1: Enable

- When Pr.07-21 is set to 1, the acceleration and deceleration will operate with full voltage. During constant speed operation, it will auto calculate the best voltage value by the load power for the load. This function is not suitable for the ever-changing load or near full-load during operation.
- When the output frequency is constant, i.e. constant operation, the output voltage will auto decrease by the load reduction. Therefore, the drive will operate with min. power, multiplication of voltage and current.
- VF and SVC mode:
  Steady-state conditions: When the output is light load, after 5 seconds will turn into the energy-saving mode.
  Reply condition: When the drive is continuously loaded or is in a non-steady state.
- FOCPM and FOC sensorless control mode, this function is invalid.

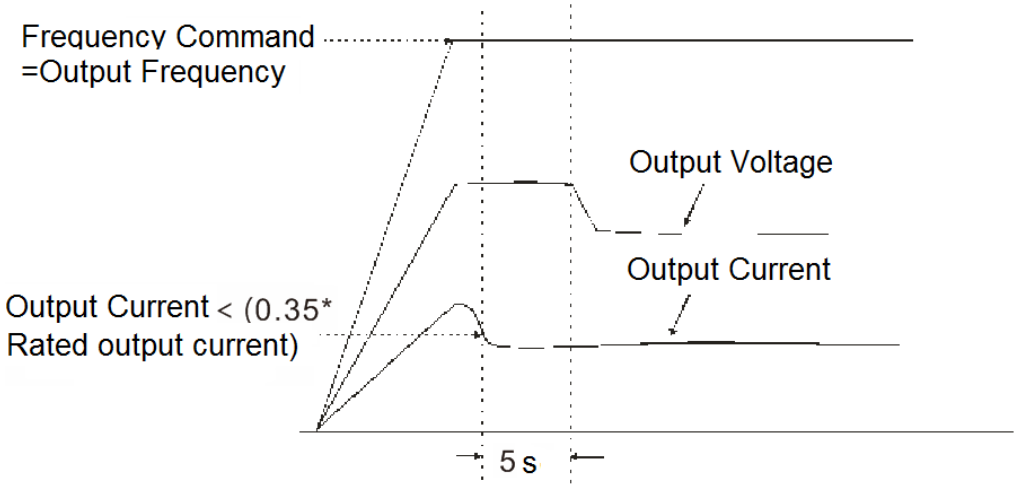


## 07-22 Energy-saving Gain

Factory Setting: 100

Settings 10~1000%

- When Pr. 07-21 is set to 1, this parameter can be used to adjust the gain of energy-saving. The factory setting is 100%. If the result is not good, it can adjust by decreasing the setting. If the motor oscillates, it should increase the setting value.
- In some applications, such as: high-speed spindle. Pay more attention to the temperature of the motor, it is hoped that the motor current can be reduced to a lower motor current level when the motor in the non-working state. Turn down this parameter can achieve the requirement.

## 07-23 Auto Voltage Regulation(AVR) Function

Factory Setting: 0

Settings 0: Enable AVR
1: Disable AVR
2: Disable AVR during deceleration

- The rated voltage of the motor is usually 220V/200VAC 60Hz/50Hz and the input voltage of the AC motor drive may vary between 180V to 264 VAC 50Hz/60Hz. Therefore, when the AC motor drive is used without AVR function, the output voltage will be the same as the input voltage. When the motor runs at voltages exceeding the rated voltage with 12% - 20%, its lifetime will be shorter and it can be damaged due to higher temperature, failing insulation and unstable torque output.
- AVR function automatically regulates the AC motor drive output voltage to the motor rated voltage. For instance, if V/f curve is set at 200 VAC/50Hz and the input voltage is at 200V to 264VAC, then the motor Output Voltage will automatically be reduced to a maximum of 200VAC/50Hz. If the input voltage is at 180V to 200VAC, output voltage to motor and input power will be in direct proportion.
- Setting 0: when AVR function is enabled, the drive will calculate the output voltage by actual DC-bus voltage. The output voltage won't be changed by DC bus voltage.
- Setting 1: when AVR function is disabled, the drive will calculate the output voltage by DC-bus voltage. The output voltage will be changed by DC bus voltage. It may cause insufficient/over current.
- Setting 2: the drive will disable the AVR during deceleration, such as operated from high speed to low speed.
- When the motor ramps to stop, the deceleration time is longer. When setting this parameter to 2 with auto acceleration/deceleration, the deceleration will be quicker.

## 07-24 Filter Time of Torque Command (V/F and SVC control mode)

Factory Setting: 0.500

Settings 0.001~10.000 sec

- When the setting is too long, the control will be stable but the control response will be delay. When the setting is too short, the response will be quickly but the control may be unstable. User can adjust the setting by the control and response situation.

## 07-25 Filter Time of Slip Compensation (V/F and SVC control mode)

Factory Setting: 0.100

Settings 0.001~10.000 sec

- It can set Pr.07-24 and 07-25 to change the response time of compensation.
- If Pr.07-24 and 07-25 are set to 10 seconds, the response time of compensation is the slowest. But the system may be unstable when the setting is too short.

## 07-26 Torque Compensation Gain (V/F and SVC control mode)

Factory Setting: 0

Settings 0~10

- When the motor load is large, a part of drive output voltage is absorbed by the resistor of stator winding and causes insufficient voltage at motor induction and result in over output current and insufficient output torque. It can auto adjust output voltage by the load and keep the air gap magnetic fields stable to get the optimal operation.

- In the V/F control, the voltage will be decreased in direct proportion when the frequency is decreased. It'll cause decrease torque at low speed due to small AC resistor and the same DC resistor. Therefore, Auto torque compensation function will increase the output voltage in the low frequency to get higher start torque.
- When Pr.07-26 is set to large, it may cause motor overflux and result in too large output current, motor overheat or triggers protection function.

## 07-27 Slip Compensation Gain (V/F and SVC control mode)

Factory Setting: 0.00
(1 in SVC mode)

Settings 0.00~10.00

- The induction motor needs the constant slip to produce magnetic torque. It can be ignore in the higher motor speed, such as rated speed or 2-3% slip.
- In the operation with variable frequency, the slip and the synchronous frequency will be in reverse proportion to produce the same magnetic torque. That is the slip will be larger with the reduction of synchronous frequency. The motor may stop when the synchronous frequency is decreased to a specific value. Therefore, the slip serious affects the accuracy of motor speed at low speed.
- In another situation, when the drive uses with induction motor, the slip will be increased by the increasing load. It also affects the accuracy of motor speed.
- This parameter can be used to set compensation frequency and reduce the slip to close the synchronous speed when the motor runs in the rated current to raise the drive accuracy. When the drive output current is larger than Pr.05-05 No-load Current of Induction Motor 1 (A), the drive will compensation the frequency by this parameter.
- When the control method (Pr.00-11) is changed from V/f mode to vector mode, this parameter will auto be set to 1.00. Otherwise, it will be set to 0.00. Please do the compensation of slip after overload and acceleration. The compensation value should be increased from small to large gradually. That is to add the output frequency with motor rated slip X Pr.07-27 Slip Compensation Gain when the motor is rated load. If the actual speed ratio is slow than expectation, please increase the setting. Otherwise, decrease the setting.

## 07-29 Slip Deviation Level

Factory Setting: 0

Settings 0.0~100.0%
0: No detection

## 07-30 Detection Time of Slip Deviation

Factory Setting:1.0

Settings 0.0~10.0 sec

## 07-31 Over Slip Treatment

Factory Setting:0

Settings 0: Warn and keep operation
1: Warn and ramp to stop

2: Warn and coast to stop

3: No warning

The Pr.07-29 to Pr.07-31 is to set allowable slip level/time and over slip treatment when the drive is running.

## 07-32 Motor Hunting Gain

Factory Setting: 1000

Settings 0~10000

The motor will have current wave motion in some specific area. It can improve this situation by setting this parameter. (When it is high frequency or run with PG, it can be set to 0. when the current wave motion happens in the low frequency, please increase Pr.07-32.)

## 07-33 Auto restart internal of Fault

Factory Setting: 60.0

Settings 0.0~6000.0 sec

When a reset/restart after fault occurs, the drive will regards Pr.07-33 as a time boundary and beging counting the numbers of faults occur within this time period. Within the period, if numbers of faults occurred did not exceed the setting in Pr.07-11, the counting will be cleared and starts from 0 when next fault occurs.

# 08 High-function PID Parameters

✓ This parameter can be set during operation.

## ✓ 08-00 Input Terminal for PID Feedback

Factory Setting: 0

Settings 0: No function
1: Negative PID feedback: input from external terminal AVI1 (Pr.03-00)
4: Positive PID feedback: input from external terminal AVI1 (Pr.03-00)

- Negative feedback means: +target value – feedback. It is used for the detection value will be increased by increasing the output frequency.
- Positive feedback means: -target value + feedback. It is used for the detection value will be decreased by increasing the output frequency.
- When Pr.08-00≠7 neither ≠8, input value is disabled. The value of the setting remains the same after the drive is off.

Common applications for PID control

1. Flow control: A flow sensor is used to feedback the flow data and performs accurate flow control.
2. Pressure control: A pressure sensor is used to feedback the pressure data and performs precise pressure control.
3. Air volume control: An air volume sensor is used to feedback the air volume data to have excellent air volume regulation.
4. Temperature control: A thermocouple or thermistor is used to feedback temperature data for comfortable temperature control.
5. Speed control: A speed sensor or encoder is used to feedback motor shaft speed or input another machines speed as a target value for closed loop speed control of master-slave operation. Pr.10.00 sets the PID set point source (target value).

PID control loop:

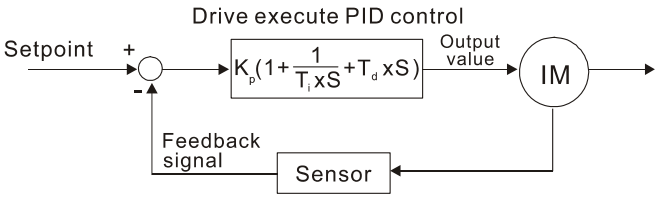


$K_p$: Proportional gain(P) $T_i$: Integral time(I) $T_d$: Derivative control(D) S: Operator

Concept of PID control

1. Proportional gain(P):
   The output is proportional to input. With only proportional gain control, there will always be a steady-state error.
2. Integral time(I):
   The controller output is proportional to the integral of the controller input. To eliminate the steady-state error, an “integral part” needs to be added to the controller. The integral time decides the relation between integral part and error. The integral part will be increased by time even if the error is small. It gradually increases the controller output to eliminate the

error until it is 0. In this way a system can be stable without steady-state error by proportional gain control and integral time control.

3. Differential control(D):

   The controller output is proportional to the differential of the controller input. During elimination of the error, oscillation or instability may occur. The differential control can be used to suppress these effects by acting before the error. That is, when the error is near 0, the differential control should be 0. Proportional gain (P) + differential control (D) can be used to improve the system state during PID adjustment.

When PID control is used in a constant pressure pump feedback application:

Set the application's constant pressure value (bar) to be the set point of PID control. The pressure sensor will send the actual value as PID feedback value. After comparing the PID set point and PID feedback, there will be an error. Thus, the PID controller needs to calculate the output by using proportional gain (P), integral time (I) and differential time (D) to control the pump. It controls the drive to have different pump speed and achieves constant pressure control by using a 4-20mA signal corresponding to 0-10 bar as feedback to the drive.

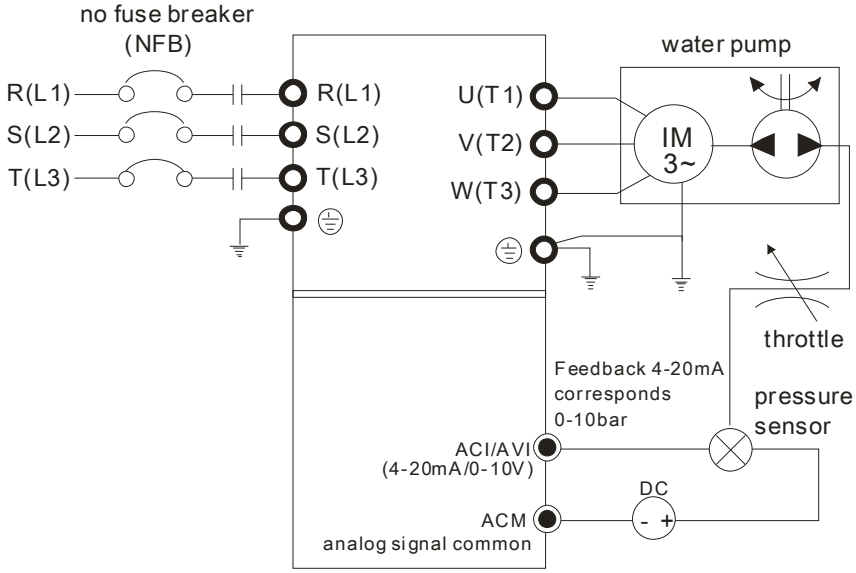


- Pr.00-04 is set to 10 (Display PID analog feedback signal value (b) (%))
- Pr.01-12 Acceleration Time will be set as required
- Pr.01-13 Deceleration Time will be set as required
- Pr.00-21=0 to operate from the digital keypad
- Pr.00-20=0, the set point is controlled by the digital keypad
- Pr.08-00=1 (Negative PID feedback from analog input)
- ACI analog input Pr. 03-01 set to 5, PID feedback signal.
- Pr.08-01-08-03 will be set as required

  If there is no vibration in the system, increase Pr.08-01(Proportional Gain (P))

  If there is no vibration in the system, reduce Pr.08-02(Integral Time (I))

  If there is no vibration in the system, increase Pr.08-03(Differential Time (D))
- Refer to Pr.08-00~08-21 for PID parameters settings.

## 08-01 Proportional Gain (P)

Factory Setting: 1.0

Settings 0.0~100.0%

- When the setting is 1.0, it means Kp gain is 100%; setting is 0.5, Kp gain means 50%.
- It is used to eliminate the system error. It is usually used to decrease the error and get the faster response speed. But if the value is set too high, it may cause the system oscillation and instability.
- If the other two gains (I and D) are set to zero, proportional control is the only one effective.

## 08-02 Integral Time (I)

Factory Setting: 1.00

Settings 0.00~100.00 sec

- The integral controller is used to eliminate the error during stable system. The integral control doesn't stop working until error is 0. The integral is acted by the integral time. The smaller integral time is set, the stronger integral action will be. It is helpful to reduce overshoot and oscillation to make a stable system. At this moment, the decreasing error will be slow. The integral control is often used with other two controls to become PI controller or PID controller.
- This parameter is used to set the integral time of I controller. When the integral time is long, it will have small gain of I controller, the slower response and bad external control. When the integral time is short, it will have large gain of I controller, the faster response and rapid external control.
- When the integral time is too small, it may cause system oscillation.
- If the integral time is set as 0.00, Pr.08-02 will be disabled.

## 08-03 Derivative Control (D)

Factory Setting: 0.00

Settings 0.00~1.00 sec

- The differential controller is used to show the change of system error and it is helpful to preview the change of error. So the differential controller can be used to eliminate the error to improve system state. With the suitable differential time, it can reduce overshoot and shorten adjustment time. However, the differential operation will increase the noise interference. Please note that too large differential will cause big noise interference. Besides, the differential shows the change and the output of the differential will be 0 when there is no change. Therefore, the differential control can't be used independently. It needs to be used with other two controllers to make a PD controller or PID controller.
- This parameter can be used to set the gain of D controller to decide the response of error change. The suitable differential time can reduce the overshoot of P and I controller to decrease the oscillation and have a stable system. But too long differential time may cause system oscillation.
- The differential controller acts for the change of error and can't reduce the interference. It is not recommended to use this function in the serious interference.

## 08-04 Upper limit of Integral Control

Factory Setting: 100.0

Settings 0.0~100.0%

- This parameter defines an upper bound or limit for the integral gain (I) and therefore limits the Master Frequency. The formula is: Integral upper bound = Maximum Output Frequency (Pr.01-00) x (Pr.08-04 %).
- Too large integral value will make the slow response due to sudden load change. In this way, it may cause motor stall or machine damage.

## 08-05 PID Output Frequency Limit

Factory Setting: 100.0

Settings 0.0~110.0%

- This parameter defines the percentage of output frequency limit during the PID control. The formula is Output Frequency Limit = Maximum Output Frequency (Pr.01-00 X Pr.08-05 %).

## 08-06 PID feedback value by communication protocol

Factory Setting: Read only

Settings -200.00%~200.00%

- When PID feedback input is set as communication (Pr08-00=7 or 8), PID feedback value can be set by this value.

## 08-07 PID Delay Time

Factory Setting: 0.0

Settings 0.0~35.0 sec

## 08-08 Feedback Signal Detection Time

Factory Setting: 0.0

Settings 0.0~3600.0 sec

- Pr.08-08 is valid only for ACI 4-20mA.
- This parameter sets the detection time of PID feedback fault. If detection time is set to 0.0, detection function is disabled.

## 08-09 Feedback Signal Fault Treatment

Factory Setting: 0

Settings 0: Warn and keep operation
1: Warn and ramp to stop
2: Warn and coast to stop
3: Warn and operate at last frequency

- This parameter is valid only for ACI 4-20mA.
- AC motor drive acts when the feedback signals analog PID feedback is fault.

## 08-10 Sleep Reference

Factory Setting: 0.00

Settings 0.00~599.00Hz

- Setting value of Pr.08-10 determines if sleep reference and wake-up reference is enable or disable. When Pr.08-10 = 0, it means disable. When 08-10 ≠ 0, it means enable.

## 08-11 Wake-up Reference

Factory Setting: 0.00

Settings 0.00~599.00Hz

- When Pr.08-18 = 0, the unit of Pr.08-10 and that of Pr.08-11 become frequency. The settings then become 0.00~599.00 Hz.
- When Pr.08-18=1, the unit of Pr.08-10 and that of Pr.08-11 switch to percentage. The settings then switch to 0~200.00%.
- And the percentage is based on the input command not maximum. E.g. If the maximum is 100 Kg, the command now is 30kg, if 08-11=40%, the value is 12kg.
- It is the same as Pr.08-10.

## 08-12 Sleep Time

Factory Setting: 0.0

Settings 0.0~6000.0 sec

- When the frequency command is smaller than the sleep frequency and less than the sleep time, the frequency command is equal to the sleep frequency. However the frequency command remains at 0.00Hz until the frequency command becomes equal to or bigger than the wake-up frequency.

## 08-13 PID feedback Deviation Level

Factory Setting: 10.0

Settings 1.0~50.0%

## 08-14 PID feedback Deviation Examine Time

Factory Setting: 5.0

Settings 0.1~300.0 sec

- PID controller should operate and approach the reference target value in a certain period of time when functions operate normally.
- Refer to PID control block diagram, if (PID reference target value - detection value) > Pr08-13 PID feedback deviation set value and the duration exceeds Pr08-14 set value under PID feedback control, the PID feedback control is fault and the multi-function output terminal option MO = 15 PID feedback deviation will be activated.

## 08-15 Filter Time for PID Feedback

Factory Setting: 5.0

Settings 0.1~300.0 sec

## 08-16 PID Compensation Selection

Factory Setting: 0

Settings 0: Parameter setting (Pr.08-17)
1: Analog input

- Pr.08-16=0: PID compensation value is given via Pr08-17 setting.
- Pr.08-16=1: The PID compensation value is given via analog input (Pr.03-00~03-02=13) and display at Pr.08-17(at this moment, Pr08-17 become read only).

## 08-17 PID Compensation

Factory Setting: 0.0

Settings -100.0~100.0%

- The PID compensation value=Max. PID target value×Pr08-17. For example, the max. output frequency Pr.01-00=60Hz, Pr.08-17=10.0%, PID compensation value will increase output frequency 6.00Hz. 60.00Hz × 100.00% × 10.0% = 6.00Hz

## 08-18 Setting of Sleep Mode Function

Factory Setting: 0

Settings 0: Follow PID output command
1: Follow PID feedback signal

- When Pr.08-18=0, the unit of Pr08-10 and that of Pr.08-11 becomes frequency. The settings then become 0.00~599.00Hz.
- When Pr.08-18=1, the unit of Pr08-10 and that of Pr.08-11 switches to percentage. The settings then switch to 0~200.00%.

## 08-19 Wake-up Integral Limit

Factory Setting: 50.0

Settings 0.0~200.0%

- The wake-up integral limit of the VFD is to prevent sudden high speed running when the VFD wakes up. The wake-up integral frequency limit=(01-00×08-19%)
- The Pr.08-19 is used to reduce the reaction time from sleep to wake-up.
- Sleep and wake-up can be divided into three cases:

1. Frequency command (do not use PID, Pr08-00 = 0) (Only in valid under V/F control)
   When the frequency command is less than the sleep frequency, the output frequency will be at the sleep frequency. When the time reaches the sleep time which set by Pr08-12, the motor will go to sleep at 0Hz.

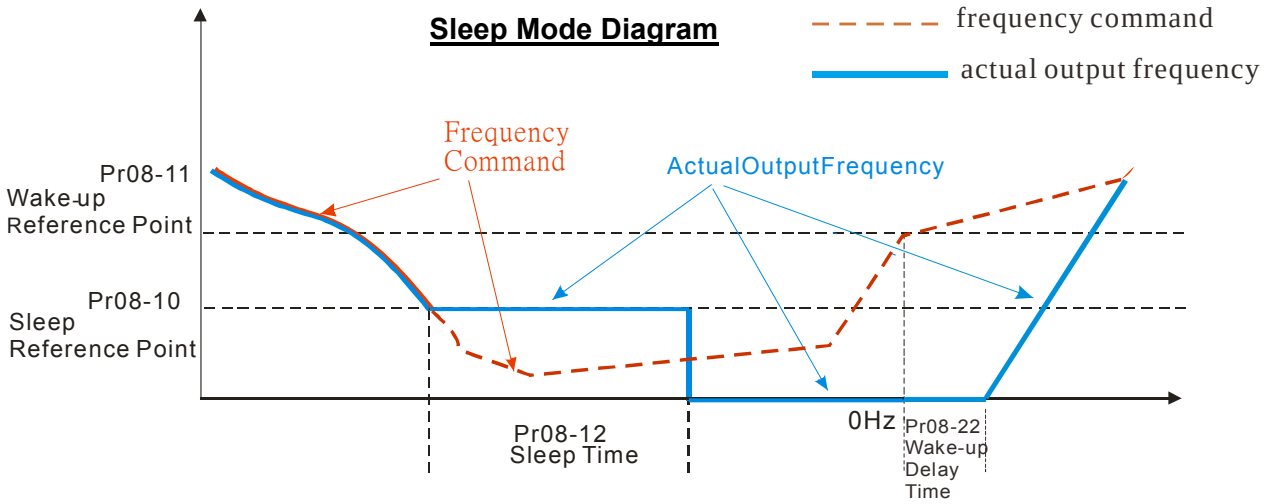


2. Internal PID calculation frequency command (use PID, Pr08-00 ≠ 0)

   After the sleep frequency is reached, the system will begin to calculate the sleep time and the output frequency will drop immediately according to the setting of Pr01-13(1st deceleration time). If the deceleration time exceeds the preset sleep time, the frequency will continue to drop to 0Hz and the motor will go to sleep at 0Hz.

   If the deceleration time (if there is a preset) does not reach the preset sleep time, the motor will remain at Pr01-11 (Lower Frequency) or remain at Pr01-07 (Output the lowest frequency setting), the motor will wait for the sleep time and go to sleep at 0Hz.

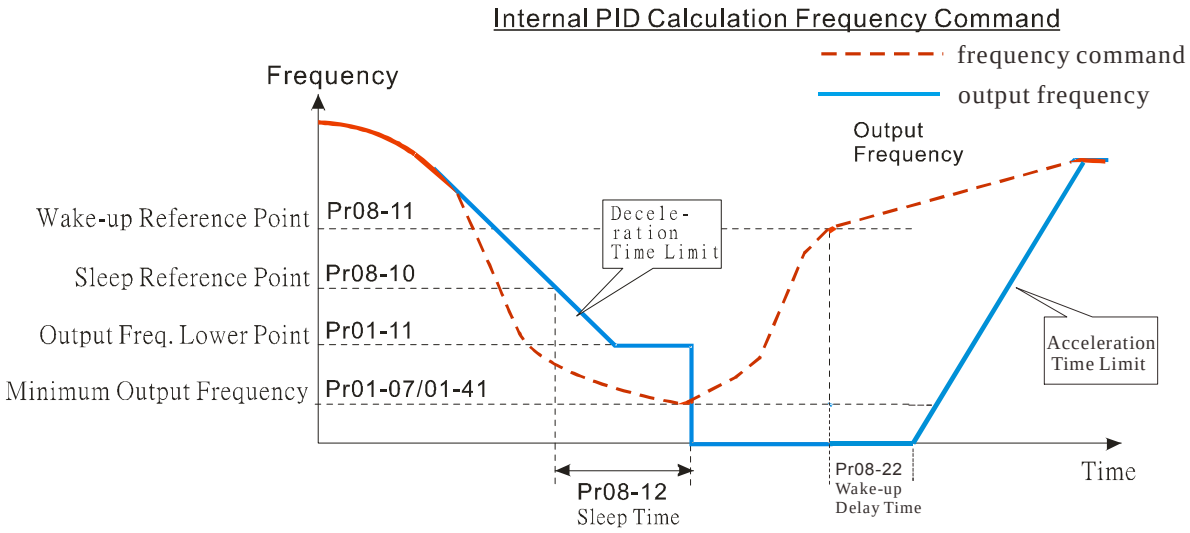


3. Percentage of PID target values (use PID, Pr08-00 ≠ 0)

   After reaching the PID target percentage and the feedback value percentage, the motor will start to calculate the sleep time. The output frequency will drop immediately after setting the first deceleration time of Pr01-13. If the motor has exceeded the preset sleep time, it will go to sleep at 0Hz.

   However, if the deceleration time does not reach the preset sleep time, it will remain at the lower limit (if preset Pr01-11) or remain at the lowest output frequency of Pr01-07, then wait for the sleep time and go to sleep at 0Hz.

Example 01: PID negative feedback

- Pr08-10 must > Pr08-11
- 30kg is the reference
- Set the parameter:

  Pr03-00=5 (AVI1 is PID feedback)

  Pr 08-00=1 (PID negative feedback: AVI1 simulation input function select)

  Pr 08-10=40% (Sleep reference: 12kg=40%*30kg)

  Pr 08-11=20% (Wake-up reference: 6kg=20%*30kg)

  Case 01: If feedback >12kg, frequency decrease.

  Case 02: If feedback <6kg, frequency increase.

| Area | PID Physical quantity |
|---|---|
| Sleep area | >12kg, motor go into sleep |
| Excessive area | between 6kg and 12kg, motor remain in the current state |
| Wake-up area | <6kg, motor wake-up |

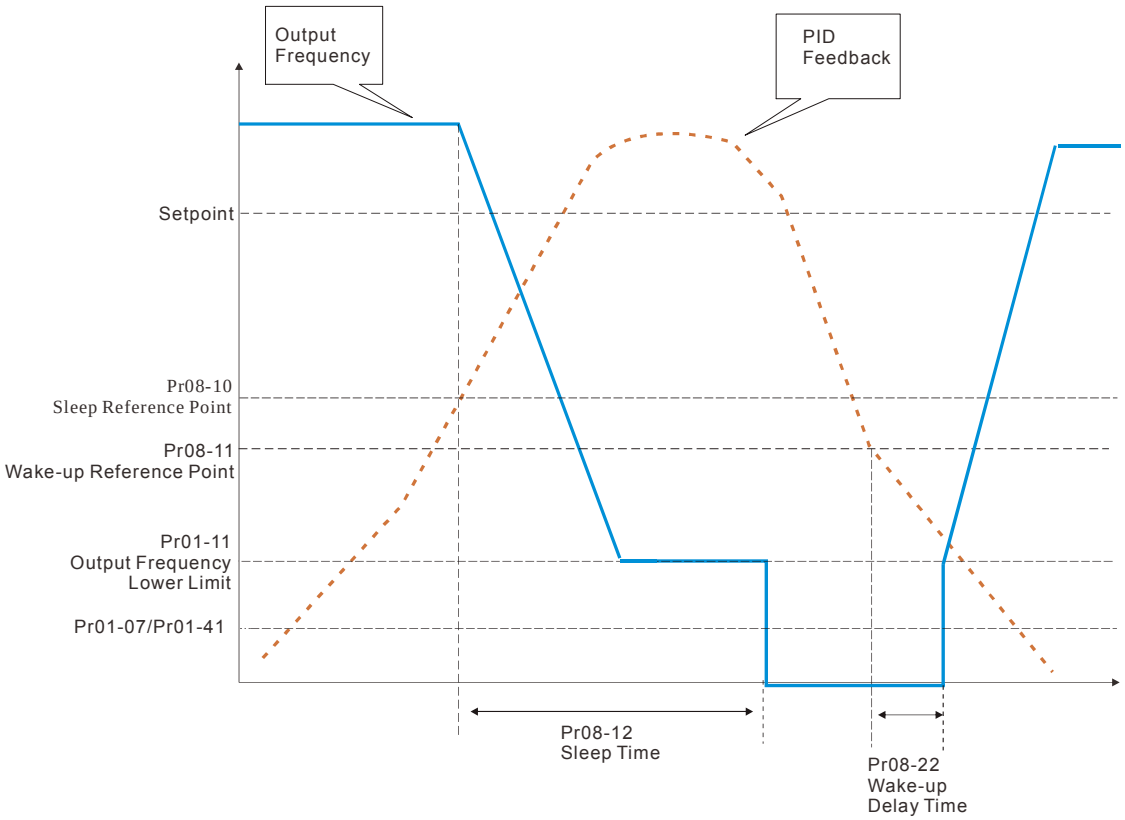

Example 02: PID positive feedback

- Pr08-10 must < Pr08-11
- 30kg is the reference
- Set the parameter:
  Pr03-00=5 (AVI1 is PID feedback)
  Pr 08-00=4 (PID positive feedback: AVI1 simulation input function select)
  Pr 08-10=110% (Sleep reference: 33kg=110%*30kg)
  Pr 08-11=120% (Wake-up reference: 36kg=120%*30kg)
  Case 01: If feedback <33kg, frequency decrease.
  Case 02: If feedback >36kg, frequency increase.

| Area | PID Physical quantity |
|---|---|
| Sleep area | >36kg, motor go into sleep |
| Excessive area | between 33kg and 36kg, motor remain in the current state |
| Wake-up area | <33kg, motor wake-up |

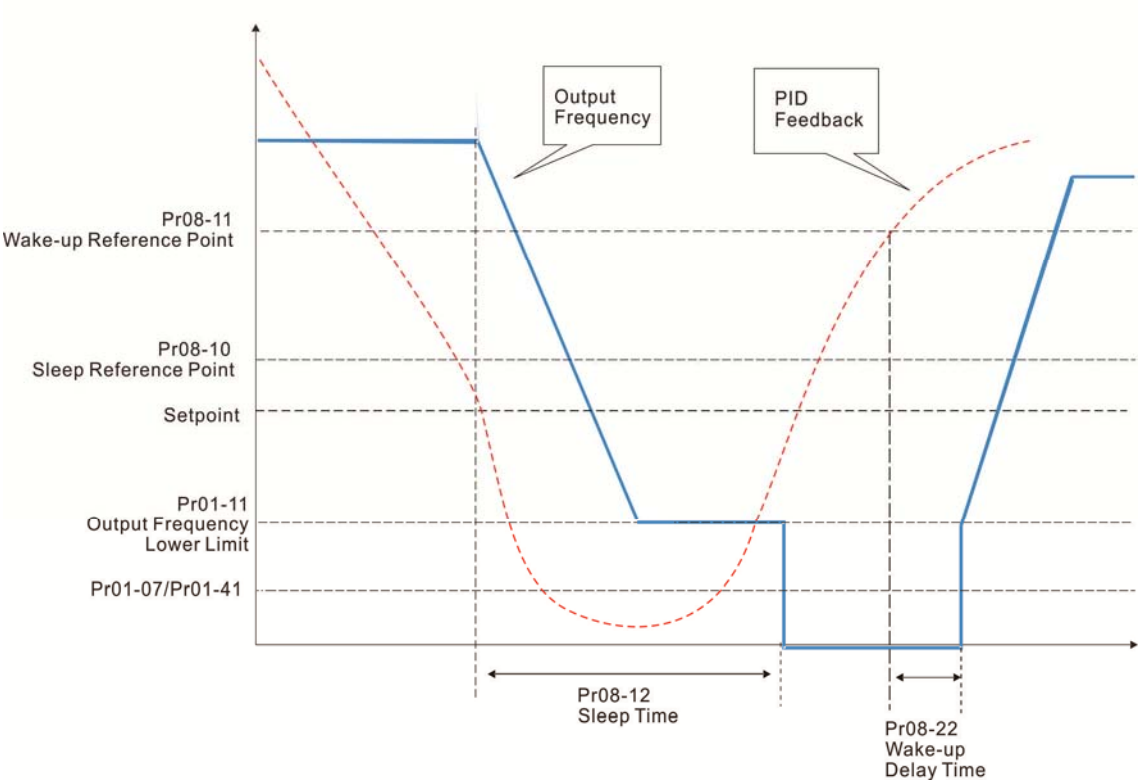


## 08-20 PID Mode Selection

Factory Setting: 0

Settings 0: Serial connection
1: Parallel connection

- When setting is 0, it uses conventional PID control structure.
- When setting is 1, proportional gain, integral gain and derivative gain are independent. The P, I and D can be customized to fit users' demand.
- Pr.08-20 determines the primary low pass filter time when in PID control. Setting a large time constant may slow down the response rate of drive.
- Output frequency of PID control will filter by primary low pass function. This function could filter mix frequencies. A long primary low pass time means filter degree is high and vice versa.

- Inappropriate setting of delay time may cause system error.
- PI Control: controlled by the P action only, and thus, the deviation cannot be eliminated entirely. To eliminate residual deviations, the P + I control will generally be utilized. And when the PI control is utilized, it could eliminate the deviation incurred by the targeted value changes and the constant external interferences. However, if the I action is excessively powerful, it will delay the responding toward the swift variation. The P action could be used solely on the loading system that possesses the integral components.
- PD Control: when deviation occurred, the system will immediately generate some operation load that is greater than the load generated single handedly by the D action to restrain the increment of the deviation. If the deviation is small, the effectiveness of the P action will be decreasing as well. The control objects include occasions with integral component loads, which are controlled by the P action only, and sometimes, if the integral component is functioning, the whole system will be vibrating. On such occasions, in order to make the P action's vibration subsiding and the system stabilizing, the PD control could be utilized. In other words, this control is good for use with loadings of no brake functions over the processes.
- PID Control: Utilize the I action to eliminate the deviation and the D action to restrain the vibration, thereafter, combine with the P action to construct the PID control. Use of the PID method could obtain a control process with no deviations, high accuracies and a stable system.
- Serial connection

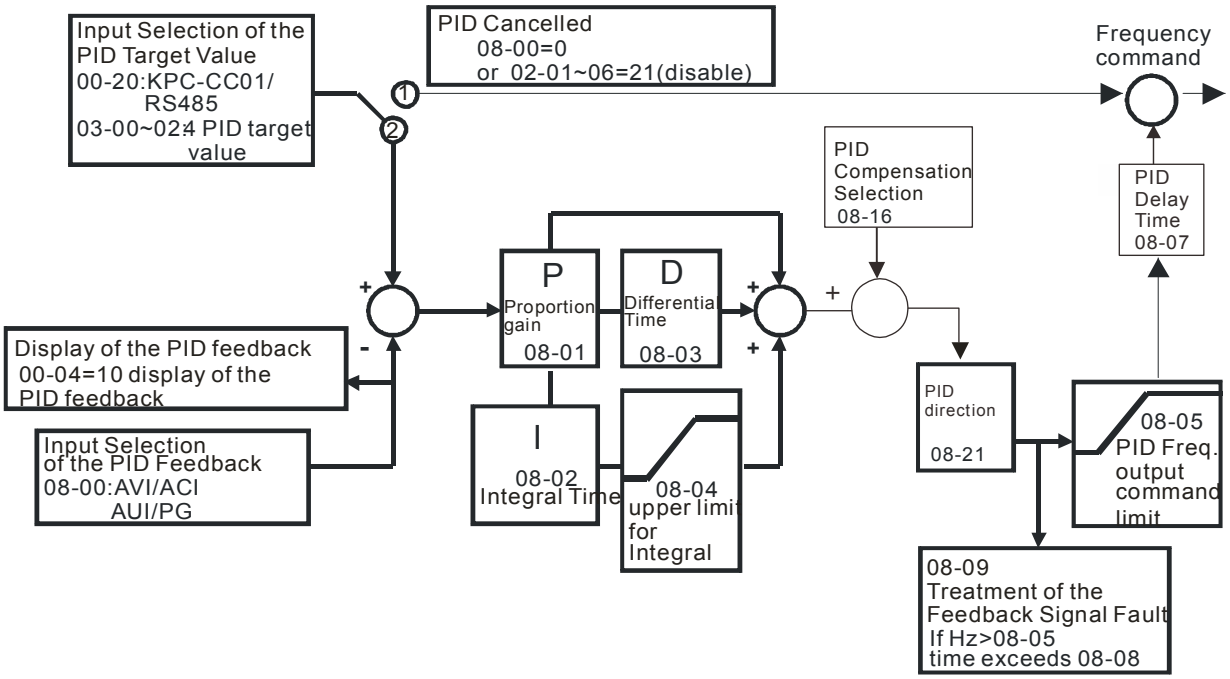

Parallel connection

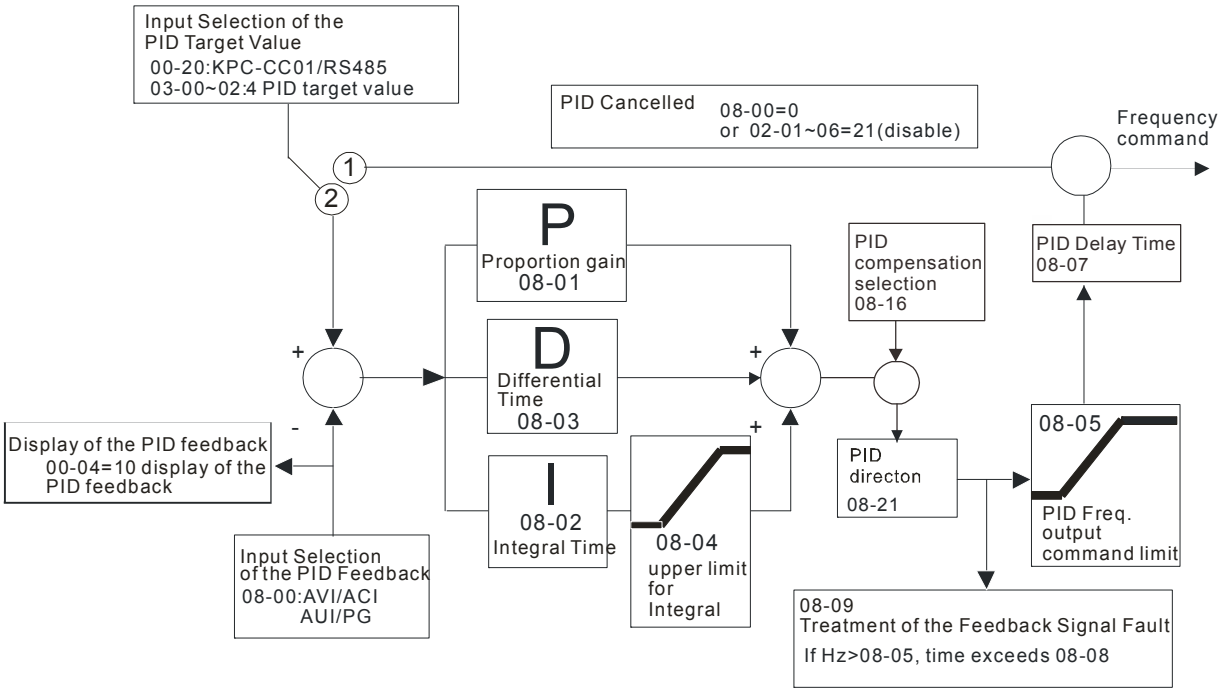


## 08-21 Enable PID to Change the Operation Direction

Factory Setting: 0

Settings 0: Disable change of direction

1: Enable change of direction

## 08-22 Wake-up delay time

Factory Setting: 0.00

Settings 0.00~600.00 sec.

Refer to Pr.08-18 for more information.

# 09 Communication Parameters

✓ The parameter can be set during the operation.

When using communication devices, connects AC drive with PC by using Delta IFD6530 or IFD6500.

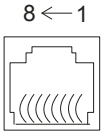


Modbus RS-485
Pin 1~2,7,8: Reserved
Pin 3, 6: GND
Pin 4: SG-
Pin 5: SG+

## ✓ 09-00 COM1 Communication Address

Factory Setting: 1

Settings 1~254

📖 If the AC motor drive is controlled by RS-485 serial communication, the communication address for this drive must be set via this parameter and each AC motor drive's communication address must be different.

## ✓ 09-01 COM1 Transmission Speed

Factory Setting: 9.6

Settings 4.8~115.2Kbps

📖 This parameter is for set up the RS485 communication transmission speed.

📖 Please set 4.8K, 9.6K, 19.2K, 38.4K, 57.6K and 115.2K. If the value is not including in the 6 type that mentioned, it will be replaced by 9.6K.

## ✓ 09-02 COM1 Transmission Fault Treatment

Factory Setting: 3

Settings
0: Warn and keep operation
1: Warn and ramp to stop
2: Warn and coast to stop
3: No warning and continue operation

📖 This parameter is to set the reaction of MODBUS transmission errors with the host. Detection time can be set in Pr09-03.

## ✓ 09-03 COM1 Time-out Detection

Factory Setting: 0.0

Settings 0.0~100.0 sec

📖 It is used to set the communication transmission time-out.

## ✓ 09-04 COM1 Communication Protocol

Factory Setting: 1

Settings
1: 7, N, 2 for ASCII
2: 7, E, 1 for ASCII
3: 7, O, 1 for ASCII
4: 7, E, 2 for ASCII
5: 7, O, 2 for ASCII
6: 8, N, 1 for ASCII

7: 8, N, 2 for ASCII
8: 8, E, 1 for ASCII
9: 8, O, 1 for ASCII
10: 8, E, 2 for ASCII
11: 8, O, 2 for ASCII
12: 8, N, 1 for RTU
13: 8, N, 2 for RTU
14: 8, E, 1 for RTU
15: 8, O, 1 for RTU
16: 8, E, 2 for RTU
17: 8, O, 2 for RTU

---

Control by PC or PLC (Computer Link)

A VFD-CP2000 can be set up to communicate on Modbus networks using one of the following modes: ASCII (American Standard Code for Information Interchange) or RTU (Remote Terminal Unit).Users can select the desired mode along with the RS-485 serial port communication protocol in Pr.09-00.

MODBUS ASCII (American Standard Code for Information Interchange): Each byte data is the combination of two ASCII characters. For example, a 1-byte data: 64 Hex, shown as ‘64’ in ASCII, consists of ‘6’ (36Hex) and ‘4’ (34Hex).

**1. Code Description**

Communication protocol is in hexadecimal, ASCII: ”0”, “9”, “A”, “F”, every 16 hexadecimal represents ASCII code. For example:

| Character | ‘0’ | ‘1’ | ‘2’ | ‘3’ | ‘4’ | ‘5’ | ‘6’ | ‘7’ |
|---|---|---|---|---|---|---|---|---|
| ASCII code | 30H | 31H | 32H | 33H | 34H | 35H | 36H | 37H |

| Character | ‘8’ | ‘9’ | ‘A’ | ‘B’ | ‘C’ | ‘D’ | ‘E’ | ‘F’ |
|---|---|---|---|---|---|---|---|---|
| ASCII code | 38H | 39H | 41H | 42H | 43H | 44H | 45H | 46H |

**2. Data Format**

10-bit character frame (For ASCII):

(7, N, 2)

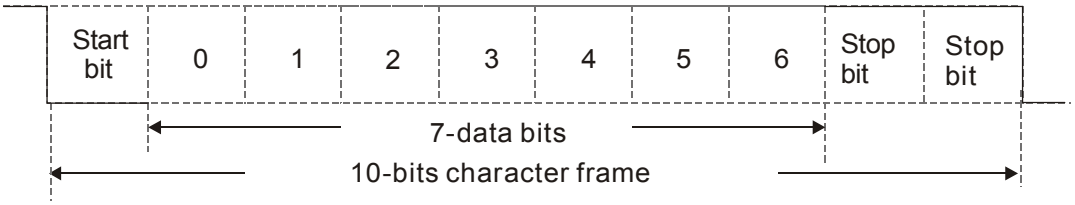


(7, E, 1)

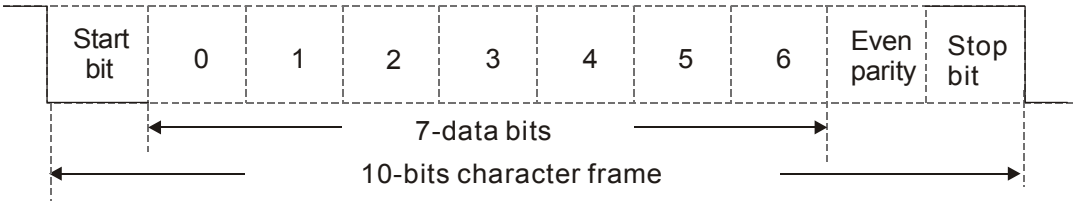

(7, O, 1)

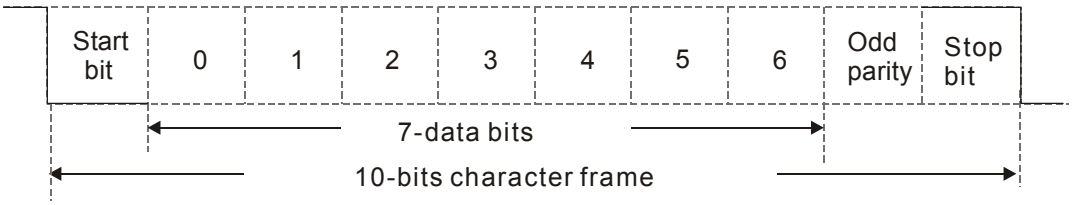


11-bit character frame (For RTU):

(8, N, 2)

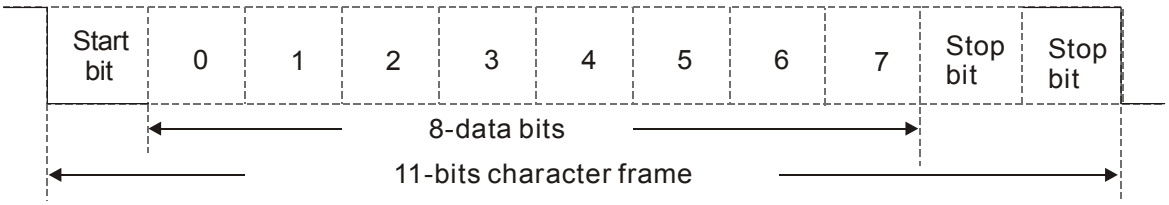


(8, E, 1)

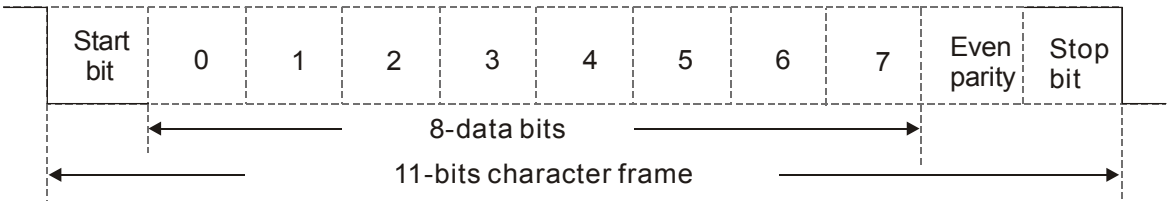


(8, O, 1)

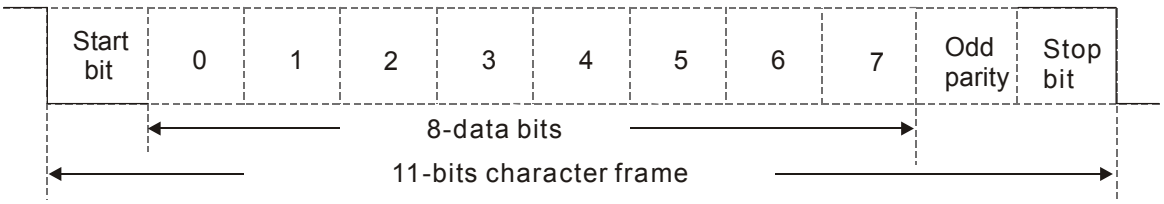


## 3. Communication Protocol

Communication Data Frame: **ASCII mode**

| | |
|---|---|
| STX | Start character = ':' (3AH) |
| Address Hi | Communication address: |
| Address Lo | 8-bit address consists of 2 ASCII codes |
| Function Hi | Command code: |
| Function Lo | 8-bit command consists of 2 ASCII codes |
| DATA (n-1) | Contents of data: |
| ……. | Nx8-bit data consist of 2n ASCII codes |
| DATA 0 | n≤16, maximum of 32 ASCII codes |
| LRC CHK Hi | LRC check sum: |
| LRC CHK Lo | 8-bit check sum consists of 2 ASCII codes |
| END Hi | End characters: |
| END Lo | END1= CR (0DH), END0= LF(0AH) |

Communication Data Frame: **RTU** mode

| | |
|---|---|
| START | A silent interval of more than 10 ms |
| Address | Communication address: 8-bit address |
| Function | Command code: 8-bit command |
| DATA (n-1) | Contents of data:<br>n×8-bit data, n≤16 |
| ……. | |
| DATA 0 | |
| CRC CHK Low | CRC check sum:<br>16-bit check sum consists of 2 8-bit characters |
| CRC CHK High | |
| END | A silent interval of more than 10 ms |

- Address (Communication Address)

  00H: broadcast to all AC drives

  01H: AC drive of address 01

  0FH: AC drive of address 15

  10H: AC drive of address 16

  :

  FEH: AC drive of address 254

- Function (Function code) and DATA (data characters)

  The format of data characters depends on the function code.

  03H: read data from register

  06H: write single register

  Example: reading continuous 2 data from register address 2102H, AMD address is 01H.

ASCII mode:

Command Message:

| | |
|---|---|
| STX | ':' |
| Address | '0' |
| | '1' |
| Function | '0' |
| | '3' |
| Starting register | '2' |
| | '1' |
| | '0' |
| | '2' |
| Number of register (count by word) | '0' |
| | '0' |
| | '0' |
| | '2' |

Response Message

| | |
|---|---|
| STX | ':' |
| Address | '0' |
| | '1' |
| Function | '0' |
| | '3' |
| Number of register (count by byte) | '0' |
| | '4' |
| Content of starting register 2102H | '1' |
| | '7' |
| | '7' |
| | '0' |
| Content of register 2103H | '0' |
| | '0' |
| | '0' |
| | '0' |

RTU mode:

Command Message:

| | |
|---|---|
| Address | 01H |
| Function | 03H |
| Starting data register | 21H |
| | 02H |
| Number of register (count by world) | 00H |
| | 02H |

Response Message

| | |
|---|---|
| Address | 01H |
| Function | 03H |
| Number of register (count by byte) | 04H |
| Content of register address 2102H | 17H |
| | 70H |
| Content of register address 2103H | 00H |
| | 00H |

06H: single write, write single data to register.

Example: writing data 6000(1770H) to register 0100H. AMD address is 01H.

ASCII mode:

Command Message:

| | |
|---|---|
| STX | ':' |
| Address | '0' |
| | '1' |
| Function | '0' |
| | '6' |
| Target register | '0' |
| | '1' |
| | '0' |
| | '0' |
| Register content | '1' |
| | '7' |
| | '7' |
| | '0' |
| | LF |

Response Message

| | |
|---|---|
| STX | ':' |
| Address | '0' |
| | '1' |
| Function | '0' |
| | '6' |
| Target register | '0' |
| | '1' |
| | '0' |
| | '0' |
| Register content | '1' |
| | '7' |
| | '7' |
| | '0' |
| | LF |

RTU mode:

Command Message:

| | |
|---|---|
| Address | 01H |
| Function | 06H |
| Target register | 01H |
| | 00H |
| Register content | 17H |
| | 70H |

Response Message

| | |
|---|---|
| Address | 01H |
| Function | 06H |
| Target register | 01H |
| | 00H |
| Register content | 17H |
| | 70H |

10H: write multiple registers (write multiple data to registers) (at most 20 sets of data can be written simultaneously)

Example: Set the multi-step speed,

Pr.04-00=50.00 (1388H), Pr.04-01=40.00 (0FA0H). AC drive address is 01H.

ASCII Mode

Command Message:

| | |
|---|---|
| STX | ':' |
| ADR 1 | '0' |
| ADR 0 | '1' |
| CMD 1 | '1' |
| CMD 0 | '0' |
| Target register | '0' |
| | '4' |
| | '0' |
| | '0' |
| Number of register (count by word) | '0' |
| | '0' |
| | '0' |
| | '2' |
| Number of register (count by Byte) | '0' |
| | '4' |
| The first data content | '1' |
| | '3' |
| | '8' |
| | '8' |
| The second data content | '0' |
| | 'F' |
| | 'A' |
| | '0' |

Response Message

| | |
|---|---|
| STX | ':' |
| ADR 1 | '0' |
| ADR 0 | '1' |
| CMD 1 | '1' |
| CMD 0 | '0' |
| Target register | '0' |
| | '4' |
| | '0' |
| | '0' |
| Number of register (count by word) | '0' |
| | '0' |
| | '0' |
| | '2' |

RTU mode:

Command Message:

| | |
|---|---|
| ADR | 01H |
| CMD | 10H |
| Target register | 05H |
| | 00H |
| Number of register (Count by word) | 00H |
| | 02H |
| Quantity of data (Byte) | 04 |

Response Message:

| | |
|---|---|
| ADR | 01H |
| CMD 1 | 10H |
| Target register | 05H |
| | 00H |
| Number of register (Count by word) | 00H |
| | 02H |
| CRC Check Low | 41H |

| | |
|---|---|
| The first data content | 13H |
| | 88H |
| The second data content | 0FH |
| | A0H |
| CRC Check Low | ‘9’ |
| CRC Check High | ‘A’ |

| | |
|---|---|
| CRC Check High | 04H |

Check sum

ASCII mode:

LRC (Longitudinal Redundancy Check) is calculated by summing up, module 256, and the values of the bytes from ADR1 to last data character then calculating the hexadecimal representation of the 2’s-complement negation of the sum.

For example,

01H+03H+21H+02H+00H+02H=29H, the 2’s-complement negation of 29H is D7H.

RTU mode:

CRC (Cyclical Redundancy Check) is calculated by the following steps:

**Step 1:**

Load a 16-bit register (called CRC register) with FFFFH.

**Step 2:**

Exclusive OR the first 8-bit byte of the command message with the low order byte of the 16-bit CRC register, putting the result in the CRC register.

**Step 3:**

Examine the LSB of CRC register.

**Step 4:**

If the LSB of CRC register is 0, shift the CRC register one bit to the right with MSB zero filling, then repeat step 3. If the LSB of CRC register is 1, shift the CRC register one bit to the right with MSB zero filling, Exclusive OR the CRC register with the polynomial value A001H, then repeat step 3.

**Step 5:**

Repeat step 3 and 4 until eight shifts have been performed. When this is done, a complete 8-bit byte will have been processed.

**Step 6:**

Repeat step 2 to 5 for the next 8-bit byte of the command message. Continue doing this until all bytes have been processed. The final contents of the CRC register are the CRC value. When transmitting the CRC value in the message, the upper and lower bytes of the CRC value must be swapped, i.e. the lower order byte will be transmitted first.

The following is an example of CRC generation using C language. The function takes two arguments:

Unsigned char* data ← a pointer to the message buffer

Unsigned char length ← the quantity of bytes in the message buffer

The function returns the CRC value as a type of unsigned integer.

```
Unsigned int crc_chk(unsigned char* data, unsigned char length)
 {
        int j;
        unsigned int reg_crc=0Xffff;
        while(length--){
              reg_crc ^= *data++;
              for(j=0;j<8;j++){
                    if(reg_crc & 0x01){    /* LSB(b0)=1 */
                          reg_crc=(reg_crc>>1) ^ 0Xa001;
                    }else{
                          reg_crc=reg_crc >>1;
                    }
              }
        }
        return reg_crc;                        // return register CRC
  }
```

## 4. Address list

| Content | Register | Function | |
|---|---|---|---|
| AC drive parameters | GGnnH | GG means parameter group, nn means parameter number, for example, the address of Pr04-01 is 0401H. | |
| Command write only | 2000H | bit1~0 | 00B: No function |
| | | | 01B: Stop |
| | | | 10B: Run |
| | | | 11B: JOG |
| | | bit3~2 | Reserved |
| | | bit5~4 | 00B: No function |
| | | | 01B: FWD |
| | | | 10B: REV |
| | | | 11B: Change direction |
| | | bit7~6 | 00B: 1st accel./decel. |
| | | | 01B: 2nd accel/decel |
| | | | 10B: 3rd accel/decel |
| | | | 11B: 4th accel/decel |
| | | bit11~8 | 000B: master speed |
| | | | 0001B: 1st Step Speed Frequency |

| Content | Register | Function | |
|---|---|---|---|
| | | | 0010B: 2nd Step Speed Frequency |
| | | | 0011B: 3rd Step Speed Frequency |
| | | | 0100B: 4th Step Speed Frequency |
| | | | 0101B: 5th Step Speed Frequency |
| | | | 0110B: 6th Step Speed Frequency |
| | | | 0111B: 7th Step Speed Frequency |
| | | | 1000B: 8th Step Speed Frequency |
| | | | 1001B: 9th Step Speed Frequency |
| | | | 1010B: 10th Step Speed Frequency |
| | | | 1011B: 11th Step Speed Frequency |
| | | | 1100B: 12th Step Speed Frequency |
| | | | 1101B: 13th Step Speed Frequency |
| | | | 1110B: 14th Step Speed Frequency |
| | | | 1111B: 15th Step Speed Frequency |
| | | bit12 | 1: Enable bit06-11 function |
| | | bit13~14 | 00B: No function |
| | | | 01B: Operated by digital keypad |
| | | | 10B: Operated by Pr.00-21 setting |
| | | | 11B: Change operation source |
| | | bit15 | Reserved |
| | 2001H | Frequency command(XXX.XXHz) | |
| | 2002H | bit0 | 1: EF (external fault) on |
| | | bit1 | 1: Reset |
| | | bit2 | 1: B.B ON |
| | | bit3~15 | Reserved |
| Status monitor read only | 2100H | High byte: Warn Code<br>Low Byte: Error Code | |
| | 2101H | bit0~1 | AC Drive Operation Status<br>00B: Drive stops<br>01B: Drive decelerating<br>10B: Drive standby<br>11B: Drive operating |
| | | bit2 | 1: JOG Command |
| | | bit3~4 | Operation Direction<br>00B: FWD run<br>01B: From REV run to FWD run<br>10B: REV run<br>11B: From FWD run to REV run |
| | | bit8 | 1: Master frequency controlled by communication interface |

| Content | Register | Function | |
|---|---|---|---|
| | | bit9 | 1: Master frequency controlled by analog signal |
| | | bit10 | 1: Operation command controlled by communication interface |
| | | bit11 | 1: Parameter locked |
| | | bit12 | 1: Enable to copy parameters from keypad |
| | | bit15~13 | Reserved |
| | 2102H | Frequency command （XXX.XX Hz） | |
| | 2103H | Output frequency （XXX.XX Hz） | |
| | 2104H | Output current（XX.XXA）. When current is higher than 655.35,it will shift decimal as（XXX.XA）. The decimal can refer to High byte of 211F. | |
| | 2105H | DC-BUS Voltage （XXX.XV） | |
| | 2106H | Output voltage（XXX.XV） | |
| | 2107H | Current step number of Multi-Step Speed Operation | |
| | 2108H | Reserved | |
| | 2109H | Counter value | |
| | 210AH | Power Factor Angle (XXX.X) | |
| | 210BH | Output Torque （XXX.X%） | |
| | 210CH | Actual motor speed（XXXXXrpm) | |
| | 210DH | Reserved | |
| | 210EH | Reserved | |
| | 210FH | Power output （X.XXX KWH） | |
| | 2116H | Multi-function display (Pr.00-04) | |
| | 211BH | Max. operation frequency (Pr.01-00) or Max. user defined value (Pr.00-26)<br>When Pr00-26 is 0, this value is equal to Pr01-00 setting<br>When Pr00-26 is not 0, and the command source is Keypad, this value = Pr00-24 * Pr00-26 / Pr01-00<br>When Pr00-26 is not 0, and the command source is 485, this value = Pr09-10 * Pr00-26 / Pr01-00 | |
| | 211FH | High byte: decimal of current value (display) | |
| | 2200H | Display output current (A). When current is higher than 655.35,it will shift decimal as（XXX.XA）. The decimal can refer to High byte of 211F. | |
| | 2201H | Display counter value (c) | |
| | 2202H | Actual output frequency（XXXXXHz） | |
| | 2203H | DC-BUS voltage（XXX.XV） | |
| | 2204H | Output voltage（XXX.XV） | |
| | 2205H | Power angle（XXX.X） | |
| | 2206H | Display actual motor speed kW of U, V, W（XXXXXkW） | |

| Content | Register | Function |
|---|---|---|
| | 2207H | Display motor speed in rpm estimated by the drive or encoder feedback（XXXXXrpm） |
| | 2208H | Display positive/negative output torque in %, estimated by the drive (t0.0: positive torque, -0.0: negative torque)（XXX.X%） |
| | 2209H | Reserved |
| | 220AH | PID feedback value after enabling PID function（XXX.XX%） |
| | 220BH | Display signal of AVI analog input terminal, 0-10V corresponds to 0.00~100.00% (1.) (as Pr. 00-04 NOTE 2) |
| | 220CH | Display signal of ACI analog input terminal, 4-V20mA/0-10V corresponds to 0.00~100.00% (2.) (as Pr. 00-04 NOTE 2) |
| | 220DH | Display signal of AUI analog input terminal, -10V~10V corresponds to -100.00~100% (3.) (as Pr. 00-04 NOTE 2) |
| | 220EH | IGBT temperature of drive power module （XXX.X℃） |
| | 220FH | The temperature of capacitance （XXX.X℃） |
| | 2210H | The status of digital input (ON/OFF), refer to Pr.02-12 (as Pr. 00-04 NOTE 3) |
| | 2211H | The status of digital output (ON/OFF), refer to Pr.02-18 (as Pr. 00-04 NOTE 4) |
| | 2212H | The multi-step speed that is executing (S) |
| | 2213H | The corresponding CPU pin status of digital input (d.) (as Pr. 00-04 NOTE 3) |
| | 2214H | The corresponding CPU pin status of digital output (O.) (as Pr. 00-04 NOTE 4) |
| | 2215H ~ 2218H | Reserved |
| | 2219H | Display times of counter overload（XXX.XX%） |
| | 221AH | GFF（XXX.XX%） |
| | 221BH | DCbus voltage ripples（XXX.XV） |
| | 221CH | PLC register D1043 data (C) |
| | 221DH | Reserved |
| | 221EH | User page displays the value in physical measure |
| | 221FH | Output Value of Pr.00-05（XXX.XXHz） |
| | 2220H | Number of revolutions of the motor |
| | 2221H | Motor running position |
| | 2222H | Fan speed of the drive（XXX%） |
| | 2223H | Control mode of the drive 0: speed mode 1: torque mode |
| | 2224H | Carrier frequency of the drive（XXKHZ） |
| | 2225H | Reserved |

| Content | Register | Function |
|---|---|---|
| | 2226H | Drive status<br>bit 1~0 00b: No direction<br>01b: Forward<br>10b: Reverse<br>bit 3~2 01b: Driver ready<br>10b: Error<br>bit 4 0b: Motor drive did not output<br>1b: Motor drive did output<br>bit 5 0b: No alarm<br>1b: Have Alarm |
| | 2227H | Drive's estimated output torque(positive or negative direction)（XXXX Nt-m） |
| | 2228H | Reserved |
| | 2229H | KWH display（XXXX.X） |
| | 222AH ~ 222DH | Reserved |
| | 222EH | PID reference（XXX.XX%） |
| | 222FH | PID offset（XXX.XX%） |
| | 2230H | PID output frequency（XXX.XXHz） |
| | 2231H | Hardware ID |

**5. Exception response:**

The AC motor drive is expected to return a normal response after receiving command messages from the master device. The AC motor drive does not receive the messages due to a communication error An exception response will be returned to the master device and the most significant bit of the original command code is set to 1. An error message "CExx" will be displayed on the keypad of AC motor drive. The xx of "CExx" is a decimal code equal to the exception code that is described below.

Example:

**ASCII mode:**

| | |
|---|---|
| STX | ':' |
| Address | '0' |
| | '1' |
| Function | '8' |
| | '6' |
| Exception code | '0' |
| | '2' |

**RTU mode:**

| | |
|---|---|
| Address | 01H |
| Function | 86H |
| Exception code | 02H |

The explanation of exception codes:

| Exception code | Explanation |
|---|---|
| 1 | Function code is not supported or unrecognized. |
| 2 | Address is not supported or unrecognized. |
| 3 | Data is not correct or unrecognized. |
| 4 | Fail to execute this function code |

## 09-09 Response Delay Time

Factory Setting: 2.0

Settings 0.0~200.0ms

This parameter is the response delay time after AC drive receives communication command as shown in the following.

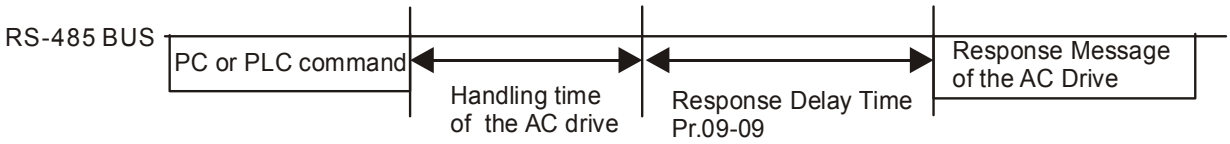


## 09-10 Main Frequency of the Communication

Factory Setting: 60.00

Settings 0.00~599.00Hz

When Pr.00-20 is set to 1 (RS485 communication). The AC motor drive will save the last frequency command into Pr.09-10 when abnormal turn-off or momentary power loss. After reboots the power, it will regard the frequency set in Pr.09-10 if no new frequency command is inputted. When frequency command of 485 is changed (the source of frequency command needs to be set as MODBUS), this parameter is also be changed.

## 09-11 Block Transfer 1

Factory Setting: 010Ch

Settings 0~FFFF

## 09-12 Block Transfer 2

Factory Setting: 010Dh

Settings 0~FFFF

## 09-13 Block Transfer 3

Factory Setting: 010Ah

Settings 0~FFFF

## 09-14 Block Transfer 4

Factory Setting: 010Bh

Settings 0~FFFF

## 09-15 Block Transfer 5

## 09-16 Block Transfer 6

## 09-17 Block Transfer 7

## 09-18 Block Transfer 8

| | |
|---|---|
| 09-19 | Block Transfer 9 |
| 09-20 | Block Transfer 10 |
| 09-21 | Block Transfer 11 |
| 09-22 | Block Transfer 12 |
| 09-23 | Block Transfer 13 |
| 09-24 | Block Transfer 14 |
| 09-25 | Block Transfer 15 |
| 09-26 | Block Transfer 16 |

Factory Setting: 0000h

Settings 0~FFFF

There is a group of block transfer parameter available in the AC motor drive (Pr.09-11 to Pr.09-26). Through communication code 03H, user can use them (Pr.09-11 to Pr.09-26) to save those parameters that you want to read.

## 09-30 Communication Decoding Method

Factory Setting: 1

Settings 0: Decoding Method 1 (20xx)
1: Decoding Method 2 (60xx)

| | | Decoding Method 1 | Decoding Method 2 |
|---|---|---|---|
| Source of Operation Control | Digital Keypad | Digital keypad controls the drive action regardless decoding method 1 or 2. | |
| | External Terminal | External terminal controls the drive action regardless decoding method 1 or 2. | |
| | RS-485 | Refer to address: 2000h~20FFh | Refer to address: 6000h ~ 60FFh |
| | CANopen | Refer to index: 2020-01h~2020-FFh | Refer to index:2060-01h ~ 2060-FFh |
| | Communication Card | Refer to address: 2000h ~ 20FFh | Refer to address: 6000h ~ 60FFh |
| | PLC | PLC commands the drive action regardless decoding method 1 or 2. | |

## 09-31 Internal Communication Protocol

Factory Setting: 0

Settings
-12: Internal PLC Control
-10: Internal Communication Master
-8: Internal Communication Slave 8
-7: Internal Communication Slave 7
-6: Internal Communication Slave 6
-5: Internal Communication Slave 5
-4: Internal Communication Slave 4
-3: Internal Communication Slave 3
-2: Internal Communication Slave 2
-1: Internal Communication Slave 1
0: Modbus 485
1: BACnet

- When it is defined as internal communication, see CH16-10 for information on Main Control Terminal of Internal Communication.
- When it is defined as internal PLC control, see CH16-12 for Remote IO control application ( by using MODRW).

## 09-33 PLC command force to 0

Factory Setting: 0

Setting 0~65535

It defines the action that before PLC scans time sequence, the frequency command or speed command needs to be cleared as 0 or not.

| bit | Explanation |
|---|---|
| bit0 | Before PLC scan, set up PLC target frequency=0 |
| bit1 | Before PLC scan, set up the PLC target torque=0 |
| bit2 | Before PLC scan, set up the speed limit of torque control mode=0 |

## 09-35 PLC Address

Factory Setting: 2

Settings 1~254

## 09-36 CANopen Slave Address

Factory Setting: 0

Settings 0: Disable
1~127

## 09-37 CANopen Speed

Factory Setting: 0

Settings 0: 1M bps
1: 500K bps
2: 250K bps
3: 125K bps
4: 100K bps (Delta only)
5: 50K bps

## 09-39 CANopen Warning Record

Factory Setting: Ready only

Settings bit 0: CANopen Guarding Time out
bit 1: CANopen Heartbeat Time out
bit 2: CANopen SYNC Time out
bit 3: CANopen SDO Time out
bit 4: CANopen SDO buffer overflow
bit 5: Can Bus Off
bit 6: Error protocol of CANOPEN
bit 8: The setting values of CANopen indexs are fail
bit 9: The setting value of CANopen address is fail
bit10: The checksum value of CANopen indexs is fail

| 09-40 | CANopen Decoding Method |
|---|---|

Factory Setting: 1

Settings 0: Delta defined decoding method
1: CANopen Standard DS402 protocol

| 09-41 | CANopen Status |
|---|---|

Factory Setting: Read Only

Settings 0: Node Reset State
1: Com Reset State
2: Boot up State
3: Pre Operation State
4: Operation State
5: Stop State

| 09-42 | CANopen Control Status |
|---|---|

Factory Setting: Read Only

Settings 0: Not ready for use state
1: Inhibit start state
2: Ready to switch on state
3: Switched on state
4: Enable operation state
7: Quick stop active state
13: Error reaction activation state
14: Error state

| 09-45 | CANopen Master Function |
|---|---|

Factory Setting: 0

Settings 0: Disable
1: Enable

| 09-46 | CANopen Master Address |
|---|---|

Factory Setting: 100

Settings 0~127

| 09-50 | BACnet Dnet (MAC ID) |
|---|---|

Factory Setting: 10

Settings 0~127

| 09-51 | BACnet Baud Rate |
|---|---|

Factory Setting: 38.4

Settings 9.6~76.8Kbps

| 09-52 | BACnet Device ID L |
|---|---|

Factory Setting: 10

Settings 0~65535

**09-53** BACnet Device ID H

Factory Setting: 0

Settings 0~63

**09-55** BACnet Max Address

Factory Setting: 127

Settings 0~127

**09-56** BACnet Password

Factory Setting: 0

Settings 0~65535

**09-60** Identifications for Communication Card

Factory Setting: Read only

Settings 0: No communication card
1: DeviceNet Slave
2: Profibus-DP Slave
3: CANopen Slave/Master
4: Modbus-TCP Slave
5: EtherNet/IP Slave

**09-61** Firmware Version of Communication Card

Factory Setting: ##

Settings Read only

**09-62** Product Code

Factory Setting: ##

Settings Read only

**09-63** Fault Code

Factory Setting: ##

Settings Read only

**09-70** Address of Communication Card (for DeviceNet or PROFIBUS)

Factory Setting: 1

Settings DeviceNet: 0-63
Profibus-DP: 1-125

**09-71** Setting of DeviceNet Speed (for DeviceNet)

Factory Setting: 2

Settings Standard DeviceNet:
0: 125Kbps
1: 250Kbps
2: 500Kbps
3: 1Mbps (Delta only)
Non standard DeviceNet: (Delta only)
0: 10Kbps
1: 20Kbps

2: 50Kbps
3: 100Kbps
4: 125Kbps
5: 250Kbps
6: 500Kbps
7: 800Kbps
8: 1Mbps

| | |
|---|---|
| 09-72 | Other Setting of DeviceNet Speed (for DeviceNet or PROFIBUS) |

Factory Setting: 0

Settings 0: Standard DeviceNet
1: Nonstandard DeviceNet

- It needs to use with Pr.09-71.
- Setting 0: the baud rate can only be set to 0, 1, 2 or 3.
- Setting 1: setting of DeviceNet communication rate can be the same as CANopen (setting 0-8).

| | |
|---|---|
| 09-75 | IP Configuration of the Communication Card (for MODBUS TCP) |

Factory Setting: 0

Settings 0: Static IP
1: DynamicIP (DHCP)

- Setting 0: it needs to set IP address manually.
- Setting 1: IP address will be auto set by host controller.

| | |
|---|---|
| 09-76 | IP Address 1 of the Communication Card (for Modbus TCP) |
| 09-77 | IP Address 2 of the Communication Card (for Modbus TCP) |
| 09-78 | IP Address 3 of the Communication Card (for Modbus TCP) |
| 09-79 | IP Address 4 of the Communication Card (for Modbus TCP) |

Factory Setting: 0

Settings 0~65535

- Pr.09-76~09-79 needs to use with communication card.

| | |
|---|---|
| 09-80 | Address Mask 1 of the Communication Card (for Modbus TCP) |
| 09-81 | Address Mask 2 of the Communication Card (for Modbus TCP) |
| 09-82 | Address Mask 3 of the Communication Card (for Modbus TCP) |
| 09-83 | Address Mask 4 of the Communication Card (for Modbus TCP) |

Factory Setting: 0

Settings 0~65535

| | |
|---|---|
| 09-84 | Getway Address 1 of the Communication Card (for Modbus TCP) |
| 09-85 | Getway Address 2 of the Communication Card (for Modbus TCP) |
| 09-86 | Getway Address 3 of the Communication Card (for Modbus TCP) |
| 09-87 | Getway Address 4 of the Communication Card (for Modbus TCP) |

Factory Setting: 0

Settings 0~65535

| | |
|---|---|
| 09-88 | Password for Communication Card (Low word) (for Modbus TCP) |
| 09-89 | Password for Communication Card (High word) (for Modbus TCP) |

Factory Setting: 0

Settings 0~99

| | |
|---|---|
| 09-90 | Reset Communication Card (for MODBUS TCP) |

Factory Setting: 0

Settings 0: Disable

1: Reset, return to factory setting

| | |
|---|---|
| 09-91 | Additional Setting for Communication Card (for Modbus TCP) |

Factory Setting: 1

Settings bit 0: Enable IP Filter

bit 1: Internet parameters enable(1bit)

When IP address is set up, this bit need to be enabled to write down the parameters. This bit will change to disable when it finishes saving the update of internet parameters.

bit 2: Login password enable(1bit)

When enter login password, this bit will be enabled. After updating the parameters of communication card, this bit will change to disable.

| | |
|---|---|
| 09-92 | Status of Communication Card (for Modbus TCP) |

Factory Setting: 0

Settings bit 0: password enable

When the communication card is set with password, this bit is enabled. When the password is clear, this bit is disabled.

# 10 Speed Feedback Control Parameters

✎ This parameter can be set during operation.

## ✎ 10-31 I/F Mode, current command

Factory Setting: 40

Settings 0~150% rated current of motor

📖 The parameter is the current command of the drive in low-speed area (low-speed area: frequency command < Pr.10-39). When it is stalling on heavy duty start-up or forward / reverse with load, adjust the parameter (increase). If inrush current is too high to cause oc stall, then decrease it.

## ✎ 10-32 PM Sensorless Observer Bandwidth for High Speed Zone

Factory Setting: 5.00

Settings 0.00~599.00Hz

📖 The parameter is speed estimator bandwidth. Adjust the parameter will influence the stability and the accuracy of speed for motor.

📖 If there is low frequency vibrates (the waveform is similar to sin wave) during the process, then increase the bandwidth. If there is high frequency vibrates (the waveform vibrates extremely and is like spur), then decrease the bandwidth.

## ✎ 10-34 PM Sensorless Observer Low-pass Filter Gain

Factory Setting: 1.00

Settings 0.00~655.35

📖 Adjust the parameter will influence the response speed of speed estimator.

📖 If there is low frequency vibrates (the waveform is similar to sin wave) during the process, then increase the gain. If there is high frequency vibrates (the waveform vibrates extremely and is like spur), then decrease the gain.

## ✎ 10-39 Frequency Point when switch from I/F mode to PM Sensorless mode

Factory Setting: 20.00

Settings 0.00~599.00Hz

📖 The parameter is the switch point which is from low frequency to high frequency.

📖 If the switch point is too low, motor will not generate enough back EMF to let the speed estimator measure the right position and speed of rotator, and cause stall and oc when the frequency of switch point is running.

📖 If the switch point is too high, the active area of I/F will be too wide, which will generate larger current and cannot save energy. (The reason is that if the current of Pr.10-31 sets too high, and the high switch point will make the drive keeps outputting with the setting value of Pr.10-31).

## ✎ 10-40 Frequency Point when Switch from PM Sensorless Mode to I/F Mode

Factory Setting: 20.00

Settings 0.00~599.00Hz

📖 The parameter is the switch point which is from high frequency to low frequency.

📖 If the switch point is too low, motor will not generate enough back EMF to let the speed

estimator measure the right position and speed of rotator when the frequency of switch point is running.

- If the switch point is too high, the active area of I/F will be too wide, which will generate larger current and cannot save energy. (The reason is that if the current of Pr.10-31 sets too high, and the high switch point will make the drive keeps outputting with the setting value of Pr.10-31).

## 10-41 I/F mode, low pass-filter time

Factory Setting: 0.2

Settings 0.0~6.0 sec

- This parameter is the filter time of Pr.10-31.It can let magnetic field under I/F mode increased smoothly to the current command setting value.
- If you want to increase the size of Id slowly, you can adjust high to avoid the starting current output Step phenomenon; if you adjust to low (minimum 0), the faster the current rises, and there will be a Step phenomenon.

## 10-42 Initial Angle Detection Pulse Value

Factory Setting: 1.0

Settings 0.0~3.0

- The angle detection is fixed to 3: Use the pulse injection method to start. The parameter influences the value of pulse during the angle detection. The larger the pulse is, the higher of the accuracy of rotator's position. But larger pulse might cause oc easily.
- Increase the parameter when the running direction and the command are opposite while start-up. If oc occurs in the start-up moment, then decrease the parameter.
- Please refer to Chapter 12-2 Adjustment & Application for detailed motor adjustment procedure.

## 10-49 Zero voltage time while start up

Factory Setting: 00.000

Settings 0.000~60.000 sec

- When the motor is in static status at the startup, the accuracy to estimate angles will be increased. In order to make the motor in "static status", the drive 3 phase U, V, W output 0V to motor to reach this goal. The Pr.10-49 setting time is the length of time when three-phase output 0V.
- It is possible that even when this parameter is being applied but the motor at the installation site cannot go in to the "static status" caused by the inertia or by any external force. So, if the motor doesn't go into a completer "static status" in 0.2 sec, increase appropriately this setting value.
- This parameter is functional only when the setting of Pr.07-12 Speed Search during Startup ≠0.

## 10-51 Injection Frequency

Factory Setting: 500

Settings 0~1200Hz

- This parameter is a high frequency injection command in PM SVC control mode, and usually it doesn't need to be adjusted. But if a motor's rated frequency (i.e. 400 Hz) is too close to the frequency setting of this parameter (i.e. factory setting 500 Hz), the accuracy of angles detected will be affected. Therefore, refer to the setting of Pr.01-01 before adjusting this parameter.

- If the setting value of Pr.00-17 is lower than Pr.10-51*10, then increase the frequency of carrier wave.
- Pr.10-51 is valid only when Pr.10-53 = 2.

## 10-52 Injection Magnitude

Factory Setting:15.0/30.0

| | |
|---|---|
| Settings | 0.0~200.0V |

- The parameter is magnitude command of high frequency injection signal in PM SVC control mode.
- Increasing the parameter can get more accurate estimated value of angle. But the noise of electromagnetic might be louder if the setting value is too high.
- This parameter will be received when motor's parameter is"Auto". And this parameter will influence the accuracy of angel's estimation.
- When the ratio of salient pole (Lq/Ld) is lower, increase Pr. 10-52 to make angle detection be accurate.
- Pr.10-52 is valid only when Pr. 10-53 = 2.

## 10-53 PM Motor Rotor Initial Angle Position Detection Method

Factory Setting： 0

| | |
|---|---|
| Settings | 0：Disabled |
| | 1：Internal 1/4 rated current attracting the rotor to zero degrees |
| | 2：High frequency injection |
| | 3：Pulse injection |

- It is suggested to set as "2" if it is IPM; set as "3" if it is SPM. If there is bad effect when set as "2" or "3", then set as "1".

# 11 Advanced Parameters

Group 11 Advanced parameters are reserved.

# 12 Pump Parameters

✓ This parameter can be set during operation.

## 12-00 Circulative Control

Factory Setting: 0

Settings 0: No operation
1: Fixed Time Circulation (by time)
2: Fixed Quantity
3: Fixed quantity control
4: Fixed Time Circulation + Fixed Quantity Circulation
5: Fixed Time Circulation + Fixed Quantity Control

In this mode, CP2000 can control up to 8 motors at a time. The total number of the motors can be determined by Pr.12-01. In accordance with the Fixed Time Circulation of Pr.12-02, you can adjust the switching time between Start/Stop of each motor. That means when an operating motor reaches the time setting of Pr.12-02, CP2000 will stop that motor. Then after the delay time setting of Pr.12-03, next motor will start operating. See diagram below.

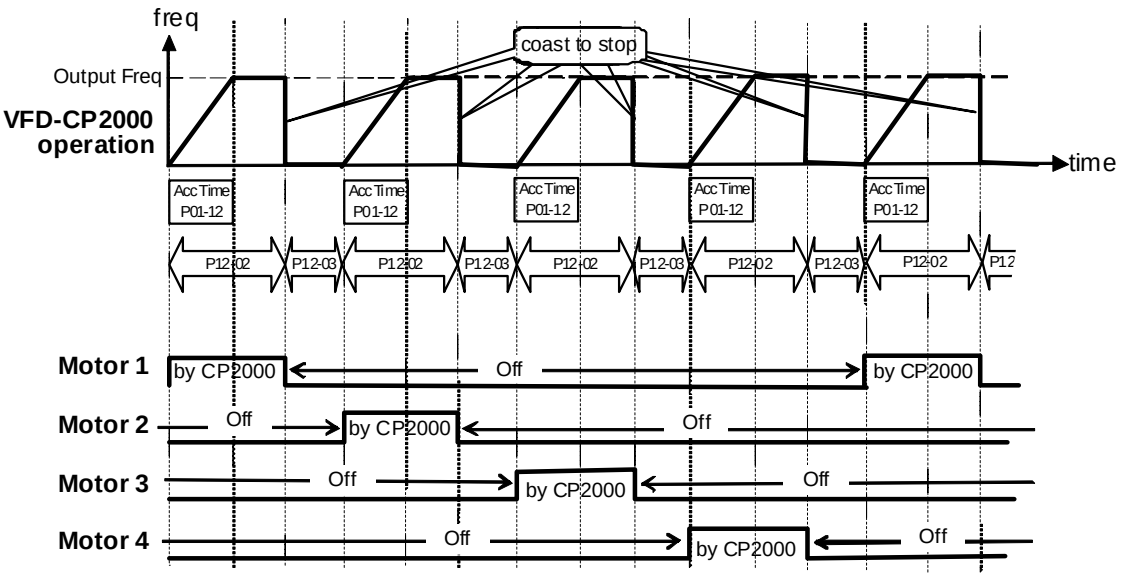


**Diagram 12-1**: Sequential Diagram of the Fixed Time Circulation (by time)

Disable Motors' Output

Set the Multifunction Input Commands as Disable Motors' Output can stop corresponding motors. The settings are:

| Pr 02-01~Pr02-06 = | 60 | 61 | 62 | 63 | 64 | 65 | 66 | 67 | 68 |
|---|---|---|---|---|---|---|---|---|---|
| Disable Motors' Output | ALL | 1 | 2 | 3 | 4 | 5 | 6 | 7 | 8 |

When a motor's output is disabled, this motor will park freely.

Wiring: Fixed Time Circulation (by time) Control can control up to 8 motors. The diagram 12-2 is an example of controlling 4 motors at the same time.

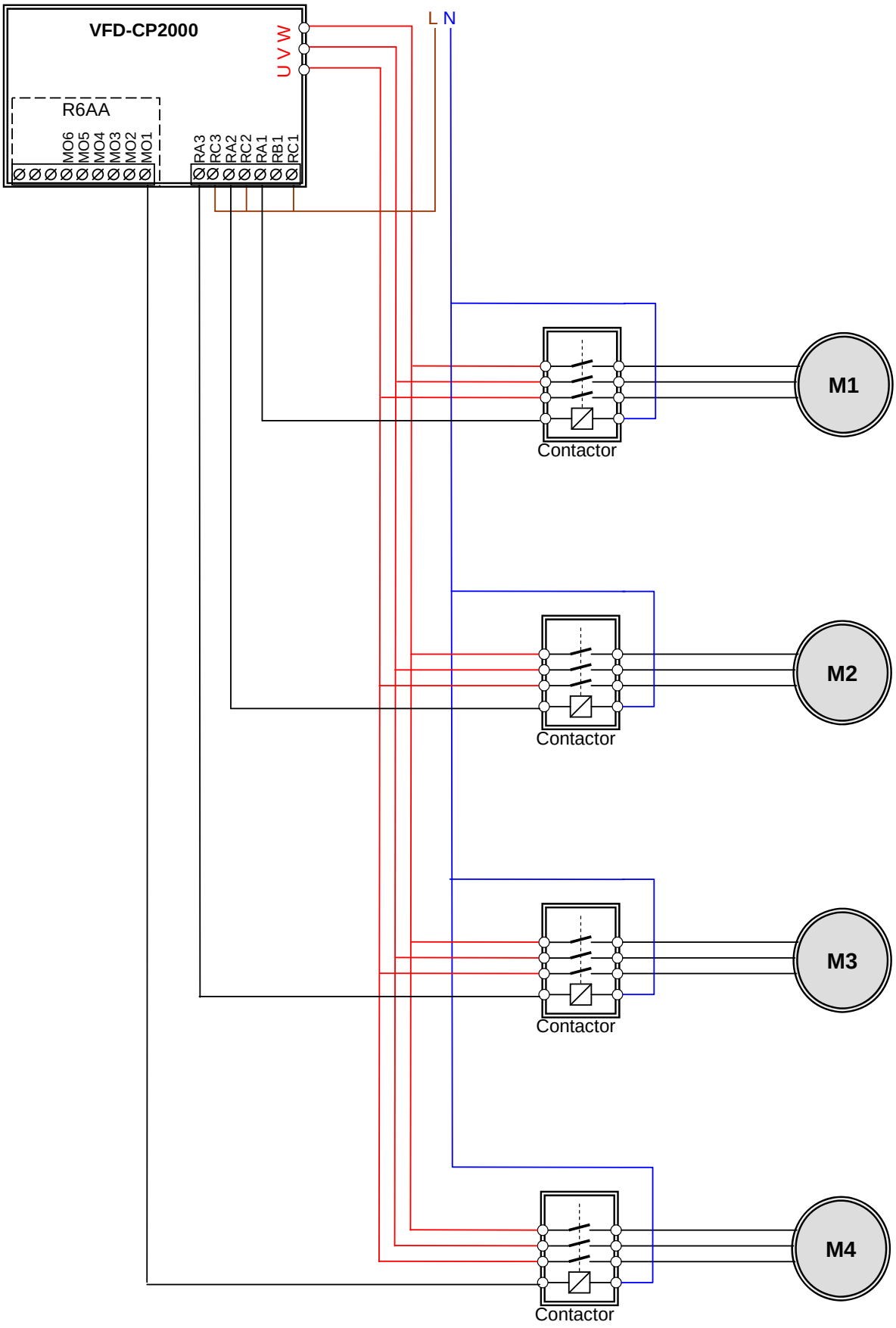


Diagram 12-2: Wiring

## 12-01 Number of Motors to be connected

Factory Setting: 1

Settings 1~8

Number of Motors: Maximum 8 motors. After setting number of motor to be connected at the same time, multi-function output terminals will follow automatically the setting as shown in the table below.

| P12-01 | 01 | 02 | 03 | 04 | 05 | 06 | 07 | 08 |
|---|---|---|---|---|---|---|---|---|
| P02-13 | 55 | 55 | 55 | 55 | 55 | 55 | 55 | 55 |
| P02-14 | | 56 | 56 | 56 | 56 | 56 | 56 | 56 |
| P02-15 | | | 57 | 57 | 57 | 57 | 57 | 57 |
| P02-36 | | | | 58 | 58 | 58 | 58 | 58 |
| P02-37 | | | | | 59 | 59 | 59 | 59 |
| P02-38 | | | | | | 60 | 60 | 60 |
| P02-39 | | | | | | | 61 | 61 |
| P02-40 | | | | | | | | 62 |

**Table 1:** Setting of Multi-function Output Terminal on Circulating Motors

## 12-02 Operating time of each motor (minutes)

Factory Setting: 0

Settings 0~65500 min

Setting of Fixed Time Circulation by minute. If Pr.12-02 = 0, that means stop timing, the current running motors will keep on operating until a stop command is given.

## 12-03 Delay Time due to the Acceleration (or the Increment ) at Motor Switching (seconds)

Factory Setting: 1.0

Settings 0.0~3600.0 sec

Delay time when switching motors in seconds. When the current running motors reach the time setting of Pr.12-02, CP2000 will follow the delay time setting of Pr.12-03 and then switch to run the next motors.

## 12-04 Delay Time due to the Deceleration ( or the Decrement) at Motor Switching (seconds)

Factory Setting: 1.0

Settings 0.0~3600.0 sec

## 12-05 Delay time while fixed quantity circulation at Motor Switching (seconds)

Factory Setting: 10.0

Settings 0.0 to 3600.0 sec

Fixed quantity circulation with PID

Sequential Diagram

In this mode, CP2000 can control up to 4 motors to increase controlling flow quantity and pressure range. When controlling flow quantity, motors will be in parallel connection. When

controlling pressure range, motors will be in series connection.

If need to increase flow quantity or pressure range, CP2000 will increase first motor's pressure from 0Hz to the largest operating frequency. If output frequency reaches the frequency setting of Pr.12-06 and delay time of Pr.12-05, then CP2000 will delay the time setting of Pr.12-03. Then CP2000 will switch the motor to use mains electricity and delay the time setting of Pr.12-03 to run next motor. If necessary, other motors will be activated in sequence. See sequential diagram of 12-3 and 12-4.

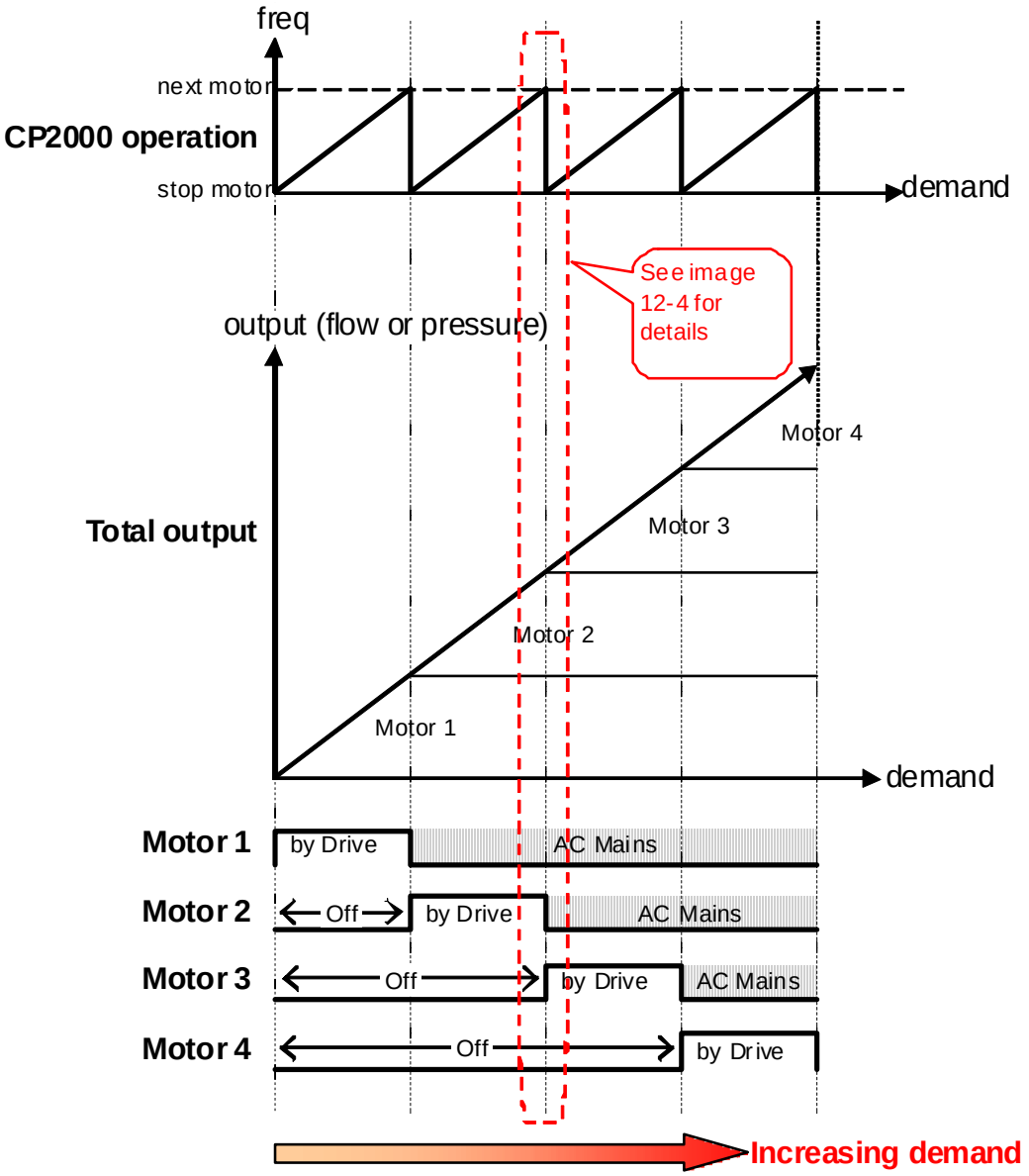


Diagram 12-3: Sequence of Fixed quantity circulation with PID – Increasing Demand

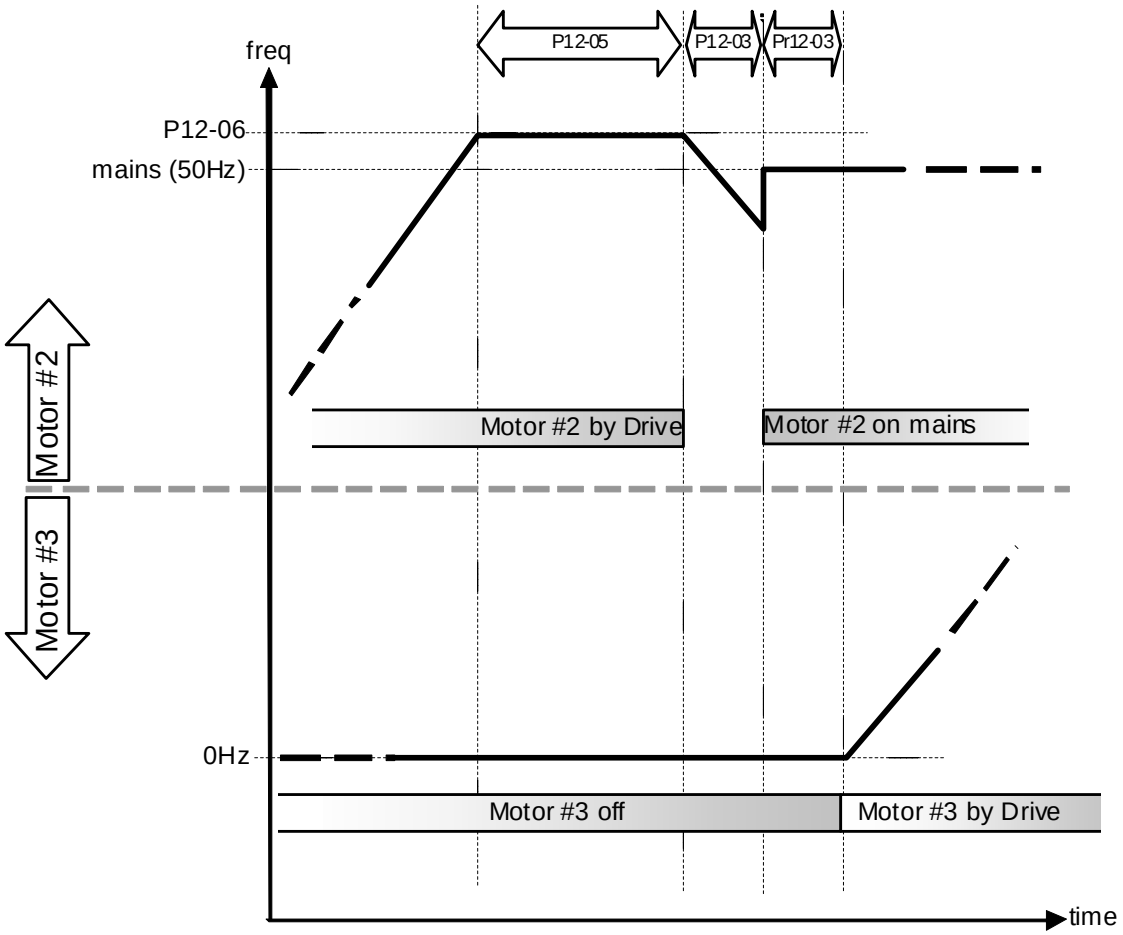


Diagram 12-4: Sequence of switching motors at fixed quantity circulation with PID – Increasing Demands

However if decreasing demands when flow quantity and pressure are too big, CP2000 will stop the current operating motors and wait for the delay time setting of Pr.12-04. Then keep on doing this until the last motor stop using mains electricity. See sequential diagram 12-5 and 12-6 below.

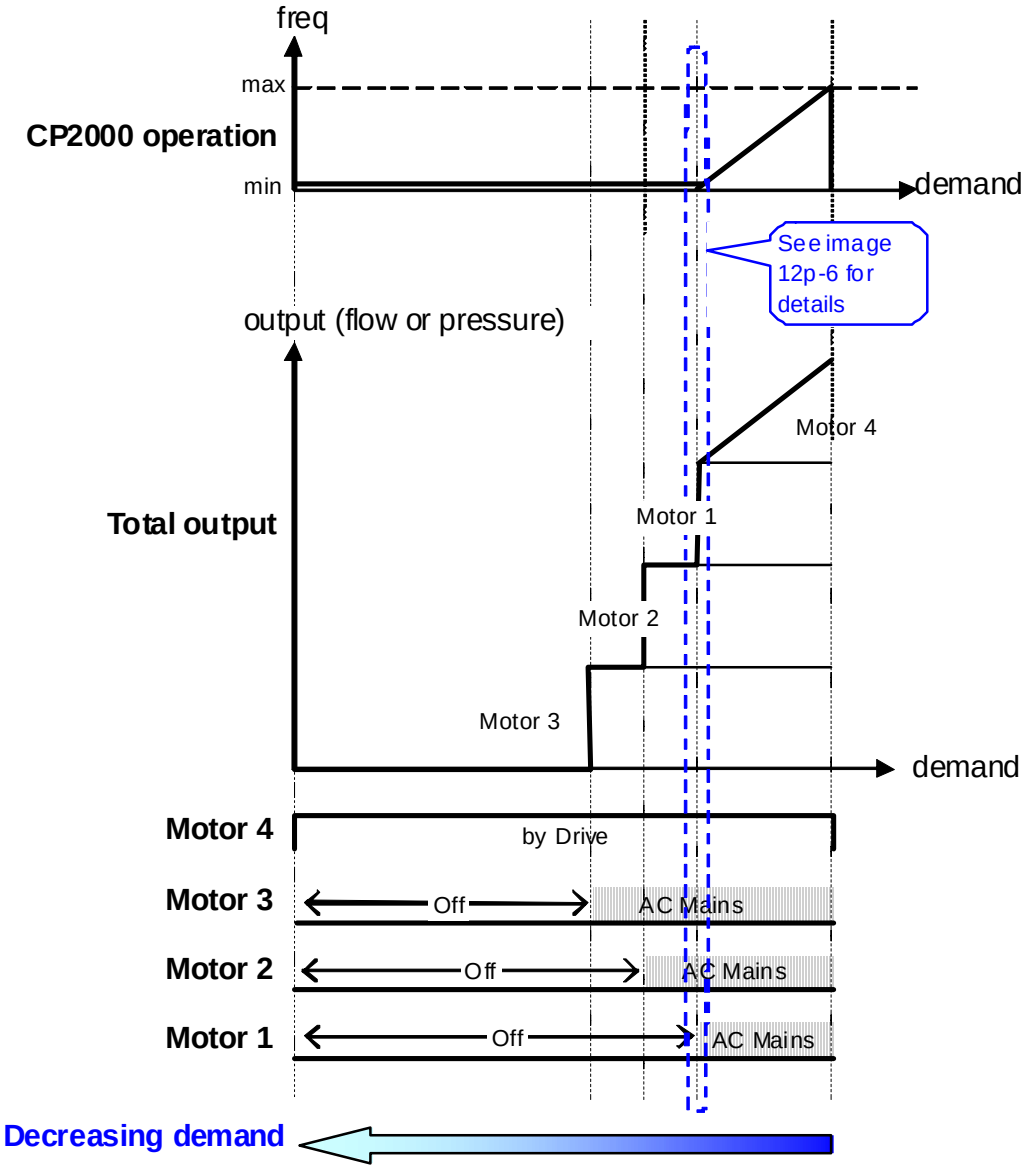


Diagram 12-5: Sequence of switching motors at fixed quantity circulation with PID – Decreasing Demands

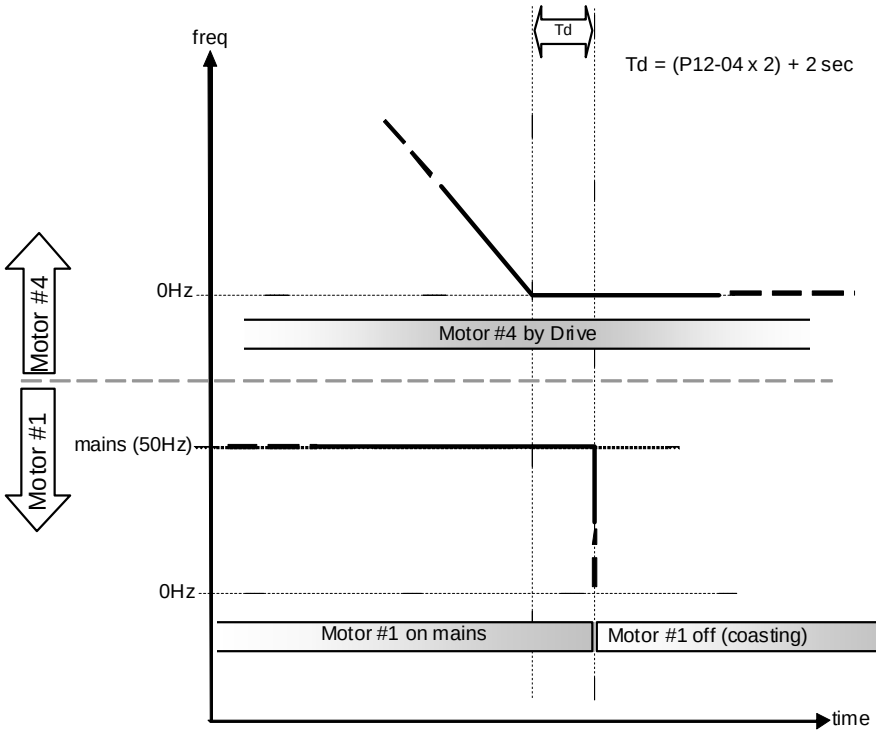


Diagram 12-6: Sequence of switching motors at fixed quantity circulation with PID – Decreasing Demands

## 🕮 Parameter Setting

<table>
<tr><th>Parameter setting</th><th>Description</th></tr>
<tr><td>Pr.12-00=2</td><td>Choose Fixed quantity circulation with PID</td></tr>
<tr><td>Pr.12-01=X</td><td>Number of Motors: Maximum 4 motors. After setting number of motor to be connected at the same time, multi-function output terminals will follow automatically the setting as shown in the table below.
<table>
<tr><td>P12-01</td><td>01</td><td>01</td><td>02</td><td>02</td><td>03</td><td>03</td><td>04</td><td>04</td><td></td></tr>
<tr><td>P02-13</td><td>55</td><td>55</td><td>55</td><td>55</td><td>55</td><td>55</td><td>55</td><td>55</td><td>Motor #1 by Drive</td></tr>
<tr><td>P02-14</td><td></td><td>56</td><td>56</td><td>56</td><td>56</td><td>56</td><td>56</td><td>56</td><td>Motor #1 by Mains</td></tr>
<tr><td>P02-15</td><td></td><td></td><td>57</td><td>57</td><td>57</td><td>57</td><td>57</td><td>57</td><td>Motor #2 by Drive</td></tr>
<tr><td>P02-36</td><td></td><td></td><td></td><td>58</td><td>58</td><td>58</td><td>58</td><td>58</td><td>Motor #2 by Mains</td></tr>
<tr><td>P02-37</td><td></td><td></td><td></td><td></td><td>59</td><td>59</td><td>59</td><td>59</td><td>Motor #3 by Drive</td></tr>
<tr><td>P02-38</td><td></td><td></td><td></td><td></td><td></td><td>60</td><td>60</td><td>60</td><td>Motor #3 by Mains</td></tr>
<tr><td>P02-39</td><td></td><td></td><td></td><td></td><td></td><td></td><td>61</td><td>61</td><td>Motor #4 by Drive</td></tr>
<tr><td>P02-40</td><td></td><td></td><td></td><td></td><td></td><td></td><td></td><td>62</td><td>Motor #4 by Mains</td></tr>
</table>
Table 2: Setting of Multi-function Output Terminal on Circulating Motors</td></tr>
<tr><td>Pr.12-03=X</td><td>Delay Time due to the Acceleration (or the Increment ) at Motor Switching ( unit: second)</td></tr>
<tr><td>Pr.12-04=X</td><td>Delay Time due to the Deceleration ( or the Decrement) at Motor Switching ( unit: sec)</td></tr>
<tr><td>Pr.12-05=X</td><td>Delay time while fixed quantity circulation at Motor Switching with PID (unit: seconds)</td></tr>
<tr><td>Pr.12-06=X</td><td>Frequency when switching motors at fixed quantity circulation (Hz)</td></tr>
</table>

Disable Motor Output

Set the Multifunction Input Commands as Disable Motors' Output can stop corresponding motors. The settings are:

| Pr.02-01~Pr.02-06= | 60 | 61 | 62 | 63 | 64 | 65 | 66 | 67 | 68 |
|---|---|---|---|---|---|---|---|---|---|
| Disable Motor Output | ALL | 1 | 2 | 3 | 4 | 5 | 6 | 7 | 8 |

When a motor's output is disabled, this motor will park freely

Fixed quantity circulation with PID can control up to 4 motors. The Diagram 12-7 below is an example of controlling 4 motors.

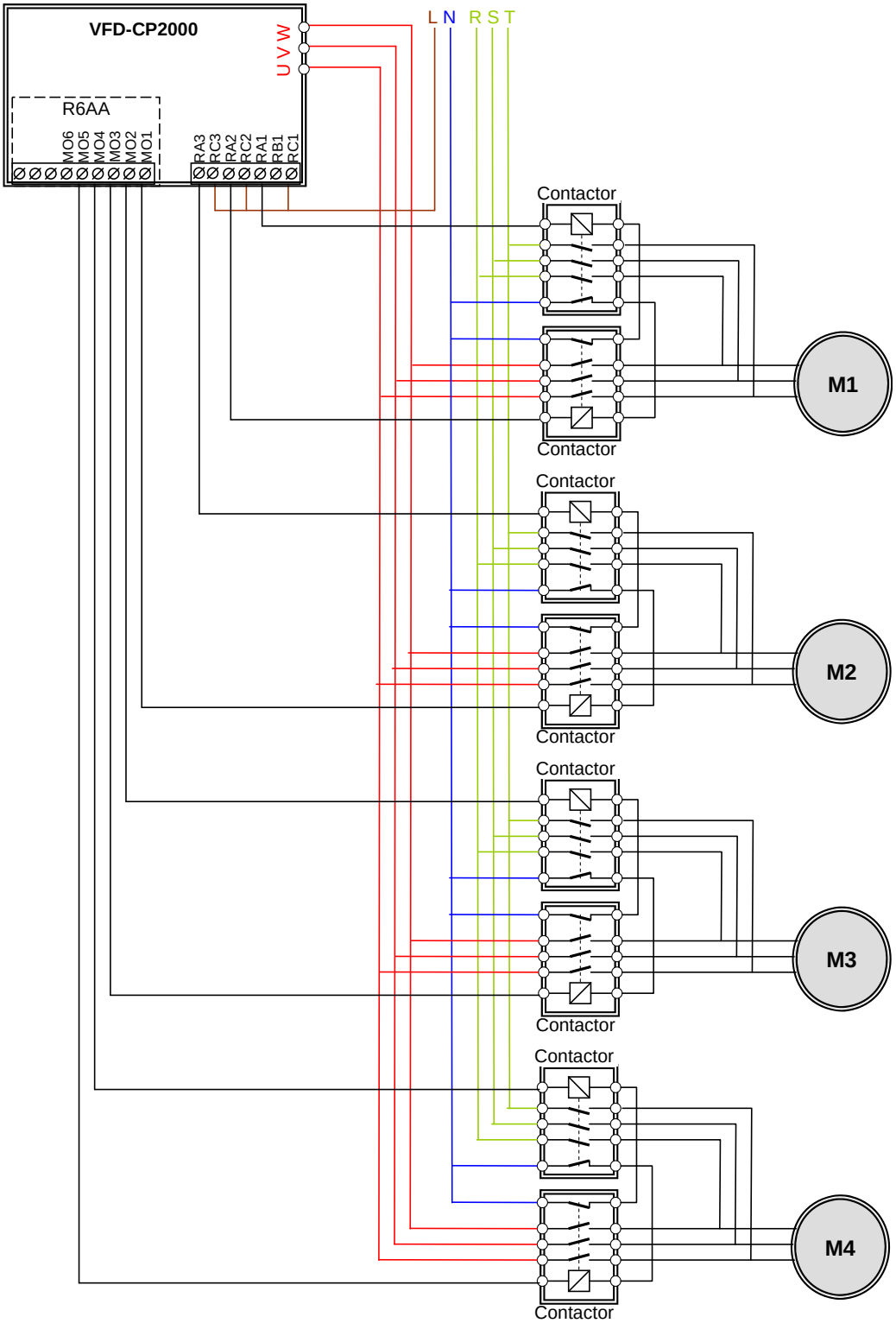


Diagram 12-7

## 12-06 Frequency when switching motors at fixed quantity circulation (Hz)

Factory Setting: 60.00

Settings 0.0~599.00Hz

When the drive's output frequency reaches the setting value of Pr.12-06, the system will start preparing to switch motors.

## 12-07 Action to do when Fixed Quantity Circulation breaks down

Factory Setting: 0

Settings 0: Turn off all output

1: Motors powered by mains electricity continues to operate

## 12-08 Frequency when stopping auxiliary motor (Hz)

Factory Setting: 0

Settings 0.00~599.00Hz

When the output frequency is smaller than the setting value of Pr.12-08 and remains at the time setting of Pr.12-04, motors will be shut down one by one.

Fixed quantity control with PID

In this mode, CP2000 can control up to 8 motors to increase controlling flow quantity and pressure range.

CP2000 connects directly to a main motor while the rest of motors are using mains electricity and controlled by a relay. When controlling flow quantity, motors will be in parallel connection. When controlling pressure range, motors will be in series connection

If need to increase flow quantity or pressure range, CP2000 will increase the main motor's pressure from 0Hz to the largest operating frequency. If necessary, CP2000 will switch in sequence the motors to use mains electricity. See sequential diagram of 12-8 and 12-9.

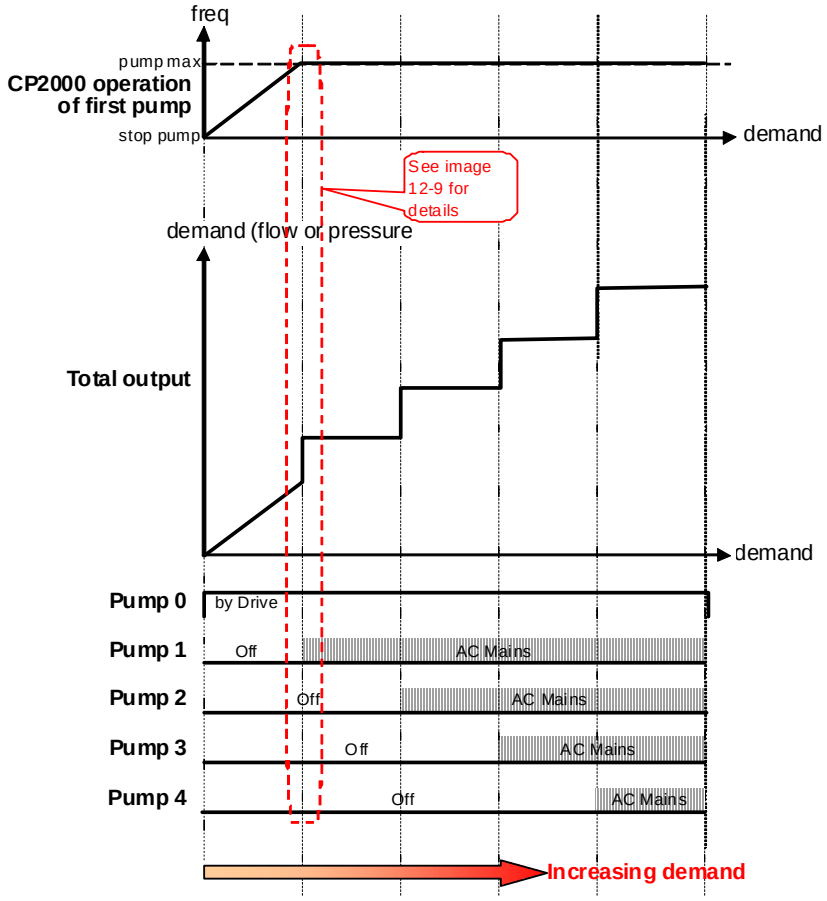


Diagram 12-8: Fixed quantity control with PID – Increasing Demand

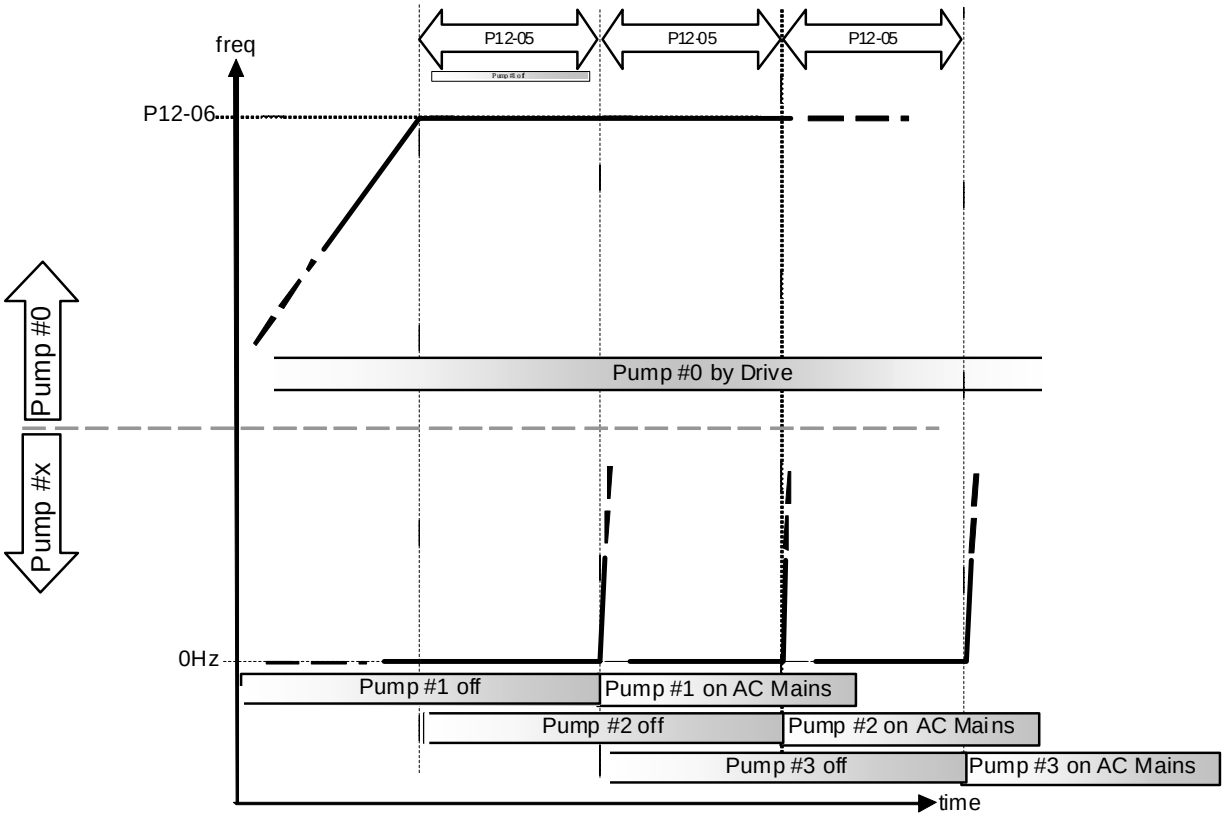


Diagram 12-9: Sequence of switching motors at fixed quantity control with PID – Increasing Demand

However, if the flow quantity or pressure is too big, CP2000 will stop, one by one, the motors from using mains electricity until CP2000 decrease the main motor's frequency to 0Hz. See diagram 12-10 and diagram 12-11.

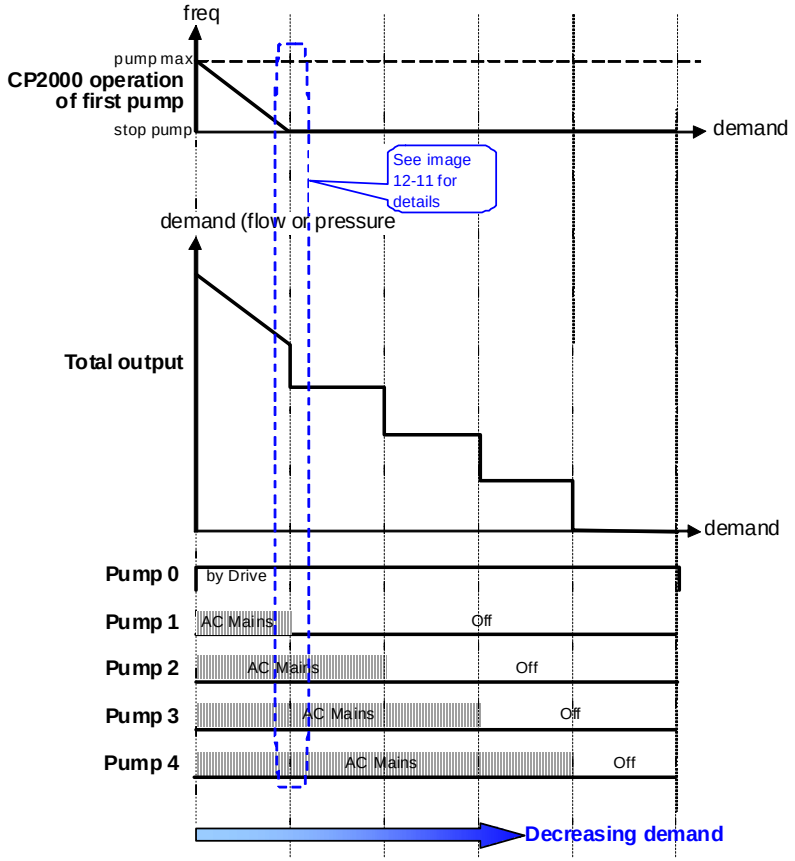


Diagram 12-10: Sequence of switching motors at fixed quantity control with PID – Decreasing Demand

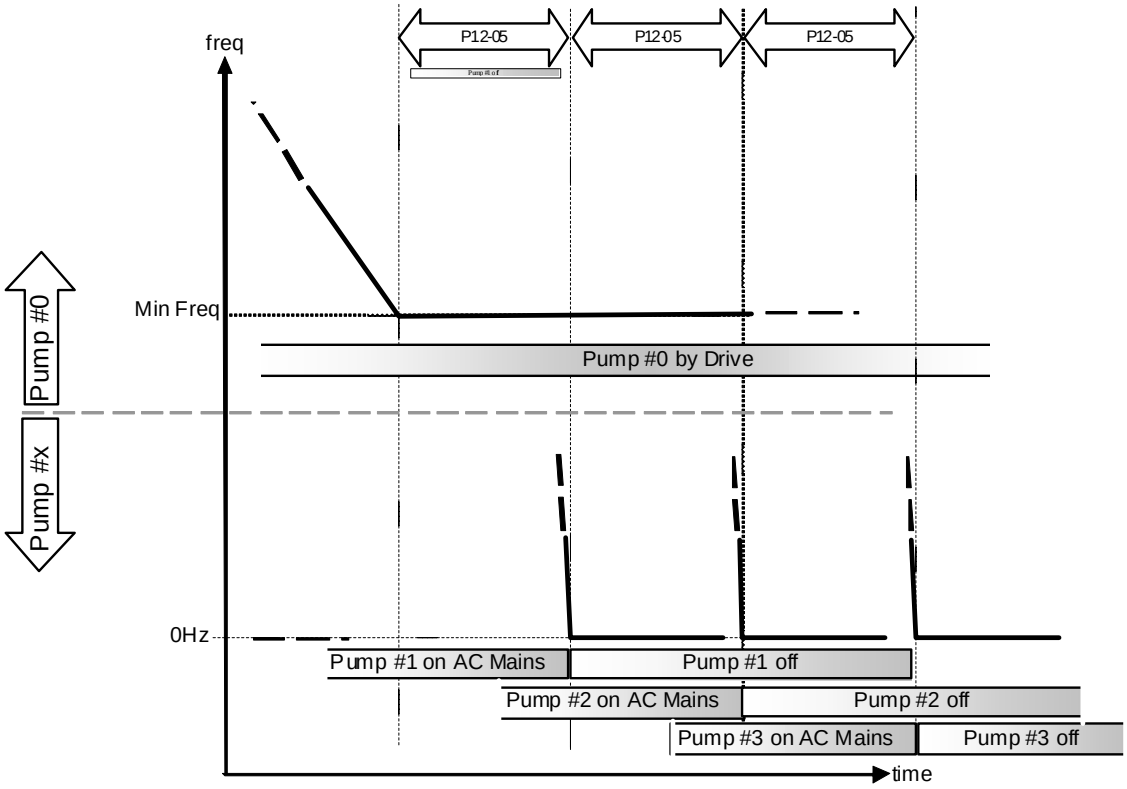


Diagram 12-10: Sequence of switching motors at fixed quantity control with PID – Decreasing Demand

<table>
<tr><th>Parameter Setting</th><th>Description</th></tr>
<tr><td>Pr.12-00=3</td><td>Choose Fixed quantity control</td></tr>
<tr><td>Pr.12-01=X</td><td>Number of Motors: Maximum 8 motors. After setting number of motor to be connected at the same time, multi-function output terminals will follow automatically the setting as shown in the table below.
<table>
<tr><td>P12-01</td><td>01</td><td>02</td><td>03</td><td>04</td><td>05</td><td>06</td><td>07</td><td>08</td><td></td></tr>
<tr><td>P02-13</td><td>55</td><td>55</td><td>55</td><td>55</td><td>55</td><td>55</td><td>55</td><td>55</td><td>Motor #1 by Mains</td></tr>
<tr><td>P02-14</td><td></td><td>56</td><td>56</td><td>56</td><td>56</td><td>56</td><td>56</td><td>56</td><td>Motor #2 by Mains</td></tr>
<tr><td>P02-15</td><td></td><td></td><td>57</td><td>57</td><td>57</td><td>57</td><td>57</td><td>57</td><td>Motor #3 by Mains</td></tr>
<tr><td>P02-36</td><td></td><td></td><td></td><td>58</td><td>58</td><td>58</td><td>58</td><td>58</td><td>Motor #4 by Mains</td></tr>
<tr><td>P02-37</td><td></td><td></td><td></td><td></td><td>59</td><td>59</td><td>59</td><td>59</td><td>Motor #5 by Mains</td></tr>
<tr><td>P02-38</td><td></td><td></td><td></td><td></td><td></td><td>60</td><td>60</td><td>60</td><td>Motor #6 by Mains</td></tr>
<tr><td>P02-39</td><td></td><td></td><td></td><td></td><td></td><td></td><td>61</td><td>61</td><td>Motor #7 by Mains</td></tr>
<tr><td>P02-40</td><td></td><td></td><td></td><td></td><td></td><td></td><td></td><td>62</td><td>Motor #8 by Mains</td></tr>
</table>
Table 2: Setting of Multi-function Output Terminal on Circulating Motors</td></tr>
<tr><td>Pr.12-05=X</td><td>Delay time while fixed quantity circulation at Motor Switching (seconds)</td></tr>
<tr><td>Pr.12-06=X</td><td>Frequency when switching motors at fixed quantity circulation (Hz)</td></tr>
</table>

📖 Disable Motor's Output

Set the Multifunction Input Commands as Disable Motors' Output can stop corresponding motors. The settings are:

| Pr.02-01~Pr.02-06= | 60 | 61 | 62 | 63 | 64 | 65 | 66 | 67 | 68 |
|---|---|---|---|---|---|---|---|---|---|
| Disable Motor's Output | ALL | 1 | 2 | 3 | 4 | 5 | 6 | 7 | 8 |

When a motor's output is disabled, this motor will park freely

📖 Wiring: Fixed Quantity Control can control up to 8 motors. The diagram 12-12 is an example of controlling 4 motors at the same time.

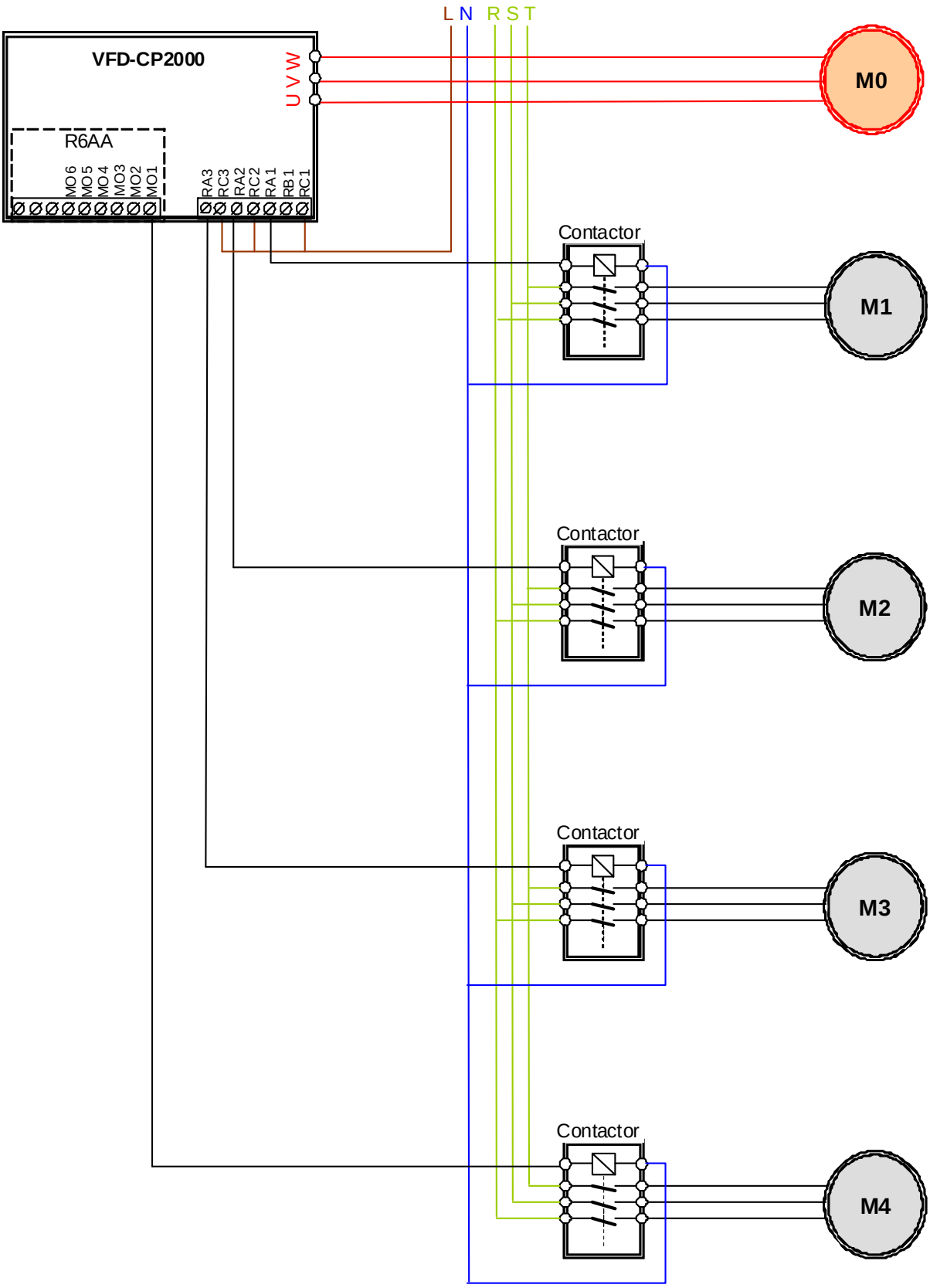


Diagram 12-12

📖 Fixed Time circulation and Fixed quantity circulation with PID

This mode combines Fixed Time circulation and fixed quantity circulation with PID. It is to prevent motors to become rusty if they are not in use for a long period of time. If some motors are not

activated, set the fixed time circulation to run motors one by one to make sure each of them has the chance to run.

While all the motors are running and water pressure is enough, the time circulation will not be enabled. Suppose that motor1 and motor2 run to reach a balance in water pressure and when the time reaches the setting at Pr.12-02, the motor1 will be running without using mains electricity and the motor2 will decelerate to stop.

When the motor2 reaches the frequency setting at Pr.12-06 and the time setting at Pr.12-05, it will be separating from the motor drive. Then when time reaches the setting at Pr.12-03, the motor2 will run by using the mains electricity. Then when the time passes the setting at Pr.12-03 , the motor3 will be enabled by the motor drive. The time sequence diagram is as shown below.

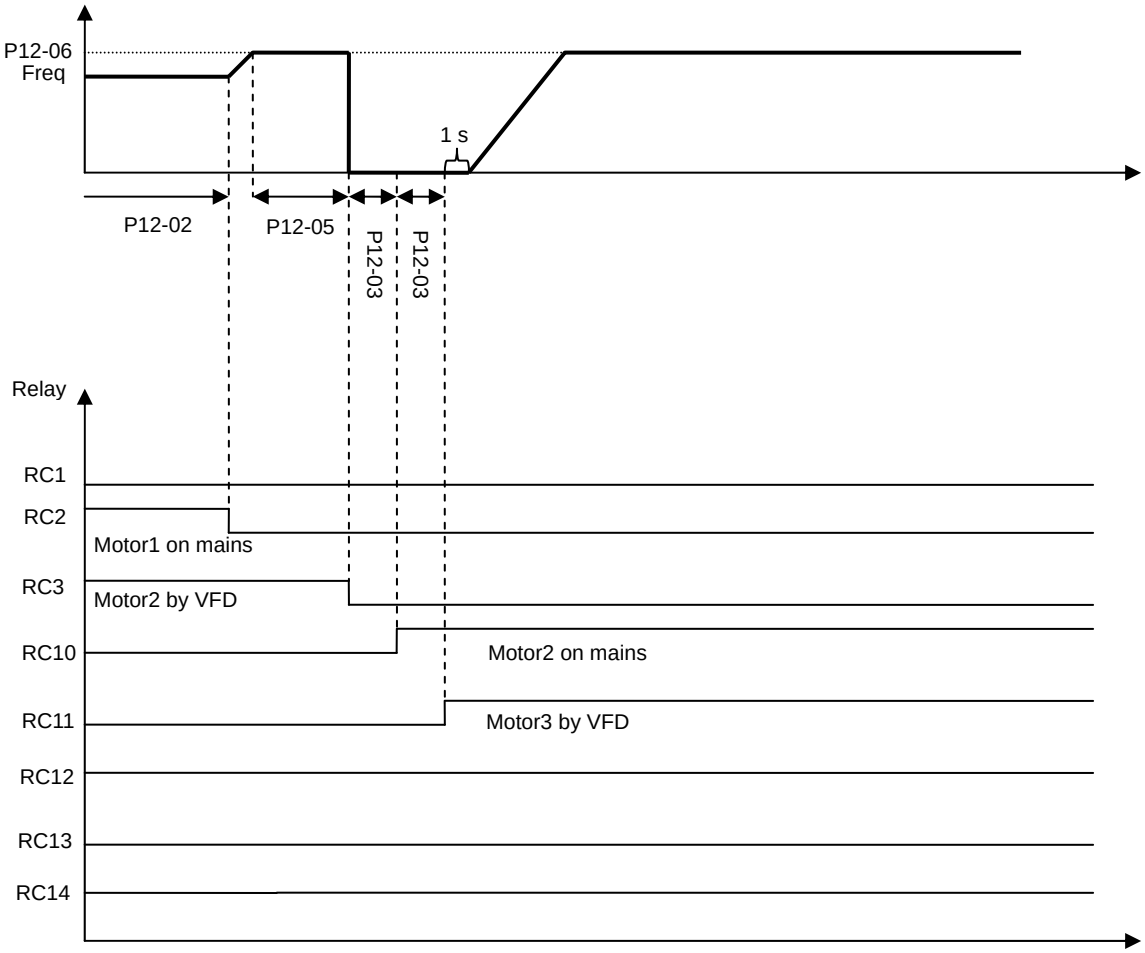


Diagram 12-13 Fixed Time Circulation and Fixed Quantity Control with PID

📖 Time circulation and Fixed amount control with PID

This mode combines Fixed Time circulation and fixed quantity control with PID. It is to prevent motors to become rusty if they are not in use for a long period of time. If some motors are not activated, set the fixed time circulation to run motors one by one to make sure each of them has the chance to run.

When all the motors are running and water pressure is enough, the fixed time circulation will not be enabled. Suppose that the motor1 and motor2 run to reach a balance in water pressure and when time reach the setting at Pr.12-02, the motor1 will be running without using mains electricity. Then when time reaches the setting at Pr.12-03, the motor3 will be running by using mains electricity. At this moment, the operating time of each motor will be reset, once reach the time setting at Pr.12-02 again, the motor2 will be running without using mains electricity. Then when time reaches the setting at Pr.12-03, the fourth motor4 will be running by using mains electricity. The time sequence diagram 12-14 is as shown below

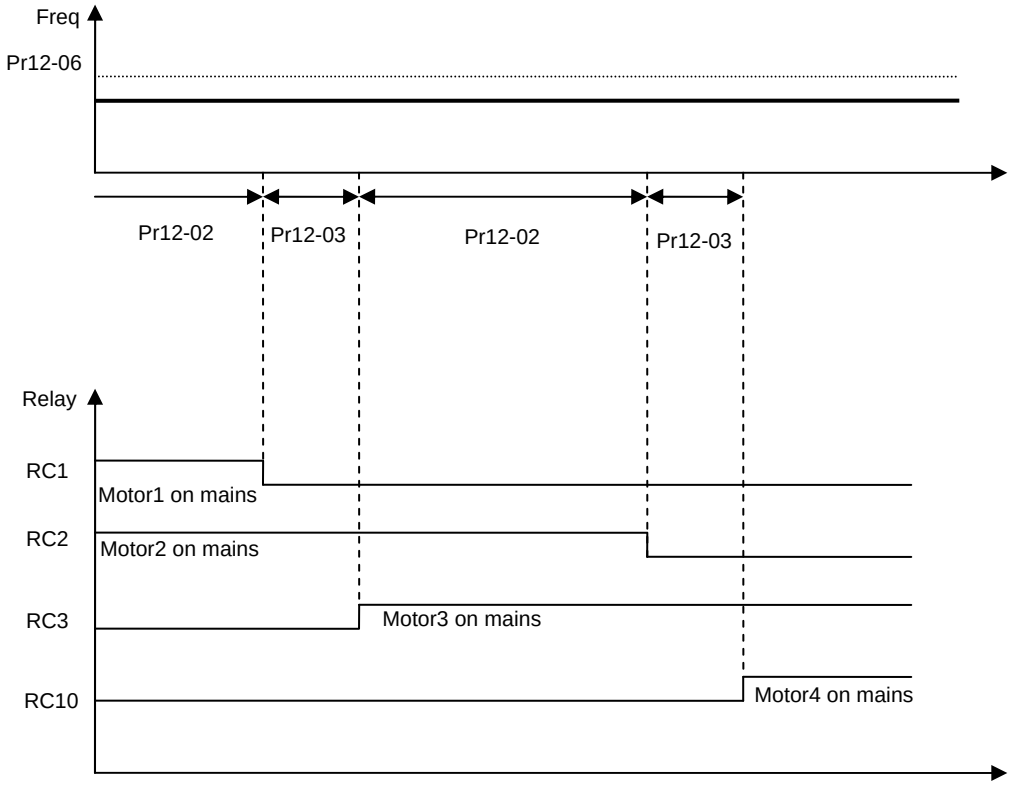


Diagram 12-14: Enabling Fixed Time Circulation under Fixed Amount Control Balance

# 13 Application Parameters by Industry

✓ This parameter can be set during operation.

## 13-00 Application selection

Factory Setting: 0

Settings 0: Disabled
1: User Parameter
2: Compressor IM
3: Fan
4: Pump
10: Air Handling Unit, AHU

Note: Some of the default values will be automatically adjusted with the selected application.

Settings: 2: Compressor IM

The following table describes the use of parameters for the relevant compressor application.

| Pr | Explanation | Settings |
|---|---|---|
| 00-11 | Control of Speed Mode | 0: VF (IM V/F control) |
| 00-16 | Load Selection | 0: Normal load |
| 00-17 | Carrier Frequency | Factory default setting |
| 00-20 | Source of Master Frequency Command (AUTO) | 2: External analog input (Pr.03-00) |
| 00-21 | Source of the Operation Command (AUTO) | 1: External terminals. Keypad STOP disabled. |
| 00-22 | Stop Method | 0: Ramp to stop |
| 00-23 | Control of Motor Direction | 1: Reverse disable |
| 01-00 | Max. Operation Frequency | Factory default setting |
| 01-01 | Output Frequency of Motor 1 | Factory default setting |
| 01-02 | Output Voltage of Motor 1 | Factory default setting |
| 01-03 | Mid-point Frequency 1 of Motor 1 | Factory default setting |
| 01-04 | Mid-point Voltage 1 of Motor 1 | Factory default setting |
| 01-05 | Mid-point Frequency 2 of Motor 1 | Factory default setting |
| 01-06 | Mid-point Voltage 2 of Motor 1 | Factory default setting |
| 01-07 | Min. Output Frequency of Motor 1 | Factory default setting |
| 01-08 | Min. Output Voltage of Motor 1 | Factory default setting |
| 01-11 | Output Frequency Lower Limit | 20 (Hz) |
| 01-12 | Accel. Time 1 | 20 (s) |
| 01-13 | Decel Time 1 | 20 (s) |
| 03-00 | Analog Input Selection (AVI) | 0: No function |
| 03-01 | Analog Input Selection (ACI) | 1: Frequency command (speed limit under torque control mode) |
| 05-01 | Full-load Current of Induction Motor 1(A) | Factory default setting |
| 05-03 | Rated Speed of Induction Motor 1 (rpm) | Factory default setting |
| 05-04 | Pole Number of Induction Motor 1 | Factory default setting |

3: Fan

The following table describes the use of parameters for the relevant fan application.

| Pr | Explanation | Settings |
|---|---|---|
| 00-11 | Control of Speed Mode | 0 (VF) |
| 00-16 | Load Selection | 0: Normal load |
| 00-17 | Carrier Frequency | Factory default setting |
| 00-20 | Source of Master Frequency Command (AUTO) | 2: External analog input (Pr.03-00) |
| 00-21 | Source of the Operation Command (AUTO) | 1: External terminals. Keypad STOP disabled. |
| 00-22 | Stop Method | 1: Coast to stop |
| 00-23 | Control of Motor Direction | 1: Reverse disable |
| 00-30 | Source of the Master Frequency Command (HAND) | 0: Digital keypad |
| 00-31 | Source of the Operation Command (HAND) | 0: Digital keypad |
| 01-00 | Max. Operation Frequency | Factory default setting |
| 01-01 | Output Frequency of Motor 1 | Factory default setting |
| 01-02 | Output Voltage of Motor 1 | Factory default setting |
| 01-03 | Mid-point Frequency 1 of Motor 1 | Factory default setting |
| 01-04 | Mid-point Voltage 1 of Motor 1 | Factory default setting |
| 01-05 | Mid-point Frequency 2 of Motor 1 | Factory default setting |
| 01-06 | Mid-point Voltage 2 of Motor 1 | Factory default setting |
| 01-07 | Min. Output Frequency of Motor 1 | Factory default setting |
| 01-08 | Min. Output Voltage of Motor 1 | Factory default setting |
| 01-10 | Output Frequency Upper Limit | 50 (Hz) |
| 01-11 | Output Frequency Lower Limit | 35 (Hz |
| 01-12 | Accel. Time 1 | 15 (s) |
| 01-13 | Decel Time 1 | 15 (s) |
| 01-43 | V/F Curve Selection | 2: $2^{nd}$ V/F curve |
| 02-05 | Multi-function Input Command 5 (MI5) | 16: Operation speed command from ACI |
| 02-16 | Multi-function Output 2 (MO1) | 11: error indication |
| 02-17 | Multi-function Output 3 (MO2) | 1: Operating indication |
| 03-00 | Analog Input Selection (AVI1) | 1: Frequency command (speed limit under torque control mode) |
| 03-01 | Analog Input Selection (ACI) | 1: Frequency command (speed limit under torque control mode) |
| 03-28 | AVI1 Selection | 0 (0~10 V) |
| 03-29 | ACI Selection | 1 (0~10 V) |
| 03-31 | AFM Output Selection | 0 (0~10 V) |
| 03-50 | Analog Input Curve Selection | 1: 3 point curve of AVI3 |

| Pr | Explanation | Settings |
|---|---|---|
| 07-06 | Restart after Momentary Power Loss | 2: Speed search for minimum output frequency |
| 07-11 | Number of Times of Auto Restart After Fault | 5 |
| 07-33 | Number of Times of Auto Restart After Fault | 60 (s) |

4: Pump

The following table describes the use of parameters for the relevant pump application.

| Pr | Explanation | Settings |
|---|---|---|
| 00-11 | Control of Speed Mode | 0 (VF) |
| 00-16 | Load Selection | 0: Normal load |
| 00-20 | Source of Master Frequency Command (AUTO) | 2: External analog input (Pr.03-00) |
| 00-21 | Source of the Operation Command (AUTO) | 1: External terminals. Keypad STOP disabled. |
| 00-23 | Control of Motor Direction | 1: Reverse disable |
| 01-00 | Max. Operation Frequency | Factory default setting |
| 01-01 | Output Frequency of Motor 1 | Factory default setting |
| 01-02 | Output Voltage of Motor 1 | Factory default setting |
| 01-03 | Mid-point Frequency 1 of Motor 1 | Factory default setting |
| 01-04 | Mid-point Voltage 1 of Motor 1 | Factory default setting |
| 01-05 | Mid-point Frequency 2 of Motor 1 | Factory default setting |
| 01-06 | Mid-point Voltage 2 of Motor 1 | Factory default setting |
| 01-07 | Min. Output Frequency of Motor 1 | Factory default setting |
| 01-08 | Min. Output Voltage of Motor 1 | Factory default setting |
| 01-10 | Output Frequency Upper Limit | 50 (Hz) |
| 01-11 | Output Frequency Lower Limit | 35 (Hz) |
| 01-12 | Accel. Time 1 | 15 (s) |
| 01-13 | Decel Time 1 | 15 (s) |
| 01-43 | V/F Curve Selection | 2: $2^{nd}$ V/F curve |
| 07-06 | Restart after Momentary Power Loss | 2: Speed search for minimum output frequency |
| 07-11 | Number of Times of Auto Restart After Fault | 5 |
| 07-33 | Auto restart internal of Fault | 60 (s) |

10: Air Handling Unit, AHU

The following table describes the use of parameters for the relevant AHU application.

| Pr | Explanation | Settings |
|---|---|---|
| 00-04 | Multi-function Display | 2 |
| 00-11 | Control of Speed Mode | 0 |
| 00-16 | Load Selection | 0 |

| Pr | Explanation | Settings |
|---|---|---|
| 00-20 | Source of Master Frequency Command (AUTO) | 2/0 |
| 00-21 | Source of the Operation Command (AUTO) | 1/0 |
| 00-22 | Stop Method | 1 |
| 00-23 | Control of Motor Direction | 1 |
| 00-30 | Source of Master Frequency Command (HAND) | 0 |
| 00-31 | Source of the Operation Command (HAND) | 0 |
| 01-00 | Max. Operation Frequency | 50 |
| 01-01 | Max. Frequency | 50 |
| 01-02 | Max. Voltage | 380 |
| 01-07 | Min. Output Frequency of Motor | 0.1 |
| 01-10 | Output Frequency Upper Limit | 50 |
| 01-11 | Output Frequency Lower Limit | 35 |
| 01-34 | Zero-speed Mode | 2 |
| 01-43 | V/F Curve Selection | 2 |
| 02-05 | Multi-function Input Command 5 (MI5) | 16/17 |
| 02-13 | Multi Output Terminal | 11 |
| 02-14 | Multi Output Terminal | 1 |
| 03-00 | Analog Input Selection (AVI) | 1 |
| 03-01 | Analog Input Selection (ACI) | 1 |
| 03-02 | Analog Input Selection (AVI2) | 1 |
| 03-28 | AVI1 Selection | 0 |
| 03-29 | ACI Selection | 1 |
| 03-20 | Multi-function Output 1 (AFM1) | 0 |
| 03-23 | Multi-function Output 2（AFM2） | 0 |
| 03-31 | AFM1 Output Selection | 0/1 |
| 03-34 | AFM2 Output Selection | 0/1 |
| 03-50 | Analog Input Curve Selection | 4 |
| 07-06 | Restart after Momentary Power Loss | 2 |
| 07-11 | Number of Restart | 5 |
| 07-33 | Time of Restart | 60 |

| | |
|---|---|
| 13-01 ~ 13-99 | Application Parameter 1~99 |

# *Chapter 13 Warning Codes*

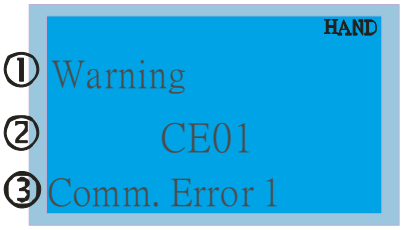


① Display error signal

② Abbreviate error code
The code is displayed as shown on KPC-CE01.

③ Display error description

| ID No. | Display on LCM Keypad | Descriptions |
|---|---|---|
| 1 | HAND<br>Warning<br>CE01<br>Comm. Error 1 | Modbus function code error |
| 2 | HAND<br>Warning<br>CE02<br>Comm. Error 2 | Address of Modbus data is error |
| 3 | HAND<br>Warning<br>CE03<br>Comm. Error 3 | Modbus data error |
| 4 | HAND<br>Warning<br>CE04<br>Comm. Error 4 | Modbus communication error |
| 5 | HAND<br>Warning<br>CE10<br>Comm. Error 10 | Modbus transmission time-out |
| 6 | HAND<br>Warning<br>CP10<br>Keypad time out | Keypad transmission time-out |
| 7 | HAND<br>Warning<br>SE1<br>Save Error 1 | Keypad COPY error 1<br>Keypad simulation error, including communication delays, communication error (keypad recived error FF86) and parameter value error. |
| 8 | HAND<br>Warning<br>SE2<br>Save Error 2 | Keypad COPY error 2<br>Keypad simulation done, parameter write error |
| 9 | HAND<br>Warning<br>oH1<br>Over heat 1 warn | IGBT over-heating warning |

| ID No. | Display on LCM Keypad | Descriptions |
|---|---|---|
| 10 | HAND<br>Warning<br>oH2<br>Over heat 2 warn | Capacity over-heating warning |
| 11 | HAND<br>Warning<br>PID<br>PID FBK Error | PID feedback error |
| 12 | HAND<br>Warning<br>ANL<br>Analog loss | ACI signal error<br>When Pr03-19 is set to 1 and 2. |
| 13 | HAND<br>Warning<br>uC<br>Under Current | Low current |
| 14 | HAND<br>Warning<br>AUE<br>Auto-tune error | Auto tuning error |
| 15 | Reserved | |
| 16 | Reserved | |
| 17 | Reserved | |
| 18 | Reserved | |
| 19 | HAND<br>Warning<br>PHL<br>Phase Loss | Phase loss |
| 20 | HAND<br>Warning<br>ot1<br>Over Torque 1 | Over torque 1 |
| 21 | HAND<br>Warning<br>ot2<br>Over Torque 2 | Over torque 2 |
| 22 | HAND<br>Warning<br>oH3<br>Motor Over Heat | Motor over-heating |
| 23 | HAND<br>Warning<br>c.c<br>cc Warn | Current control |
| 24 | HAND<br>Warning<br>oSL<br>Over Slip Warn | Over slip |

| ID No. | Display on LCM Keypad | Descriptions |
|---|---|---|
| 25 | HAND<br>Warning<br>tUn<br>Auto tuning | Auto tuning processing |
| 26 | Reserved | |
| 27 | Reserved | |
| 28 | HAND<br>Warning<br>OPHL<br>Output PHL Warn | Output phase loss |
| 29 | Reserved | |
| 30 | HAND<br>Warning<br>SE3<br>Copy Model Err 3 | Keypad COPY error 3<br>Keypad copy between different power range drive |
| 31 | Reserved | |
| 32 | Reserved | |
| 33 | Reserved | |
| 34 | Reserved | |
| 35 | Reserved | |
| 36 | HAND<br>Warning<br>CGdn<br>Guarding T-out | CAN guarding time-out 1 |
| 37 | HAND<br>Warning<br>CHbn<br>Heartbeat T-out | CAN heartbeat time-out 2 |
| 38 | HAND<br>Warning<br>CSYn<br>SYNC T-out | CAN synchrony time-out |
| 39 | HAND<br>Warning<br>CbFn<br>Can Bus Off | CAN bus off |
| 40 | HAND<br>Warning<br>CIdn<br>CAN/S Idx exceed | CAN index error |
| 41 | HAND<br>Warning<br>CAdn<br>CAN/S Addres set | CAN station address error |
| 42 | HAND<br>Warning<br>CFrn<br>CAN/S FRAM fail | CAN memory error |

| ID No. | Display on LCM Keypad | Descriptions |
|---|---|---|
| 43 | HAND<br>Warning<br>CSdn<br>SDO T-out | CAN SDO transmission time-out |
| 44 | HAND<br>Warning<br>CSbn<br>Buf Overflow | CAN SDO received register overflow |
| 45 | HAND<br>Warning<br>Cbtn<br>Boot up fault | CAN boot up error |
| 46 | HAND<br>Warning<br>CPtn<br>Error Protocol | CAN format error |
| 47 | HAND<br>Warning<br>PIra<br>RTC Adjust | Adjust RTC |
| 48 | Reserved | |
| 49 | HAND<br>Warning<br>PIrt<br>Keypad RTC TOut | Keypad RTC time out |
| 50 | HAND<br>Warning<br>PLod<br>Opposite Defect | PLC download error |
| 51 | HAND<br>Warning<br>PLSv<br>Save mem defect | Save error of PLC download |
| 52 | HAND<br>Warning<br>PLdA<br>Data defect | Data error during PLC operation |
| 53 | HAND<br>Warning<br>PLFn<br>Function defect | Function code of PLC download error |
| 54 | HAND<br>Warning<br>PLor<br>Buf overflow | PLC register overflow |
| 55 | HAND<br>Warning<br>PLFF<br>Function defect | Function code of PLC operation error |

| ID No. | Display on LCM Keypad | Descriptions |
|---|---|---|
| 56 | HAND<br>Warning<br>PLSn<br>Check sum error | PLC checksum error |
| 57 | HAND<br>Warning<br>PLEd<br>No end command | PLC end command is missing |
| 58 | HAND<br>Warning<br>PLCr<br>PLC MCR error | PLC MCR command error |
| 59 | HAND<br>Warning<br>PLdF<br>Download fail | PLC download fail |
| 60 | HAND<br>Warning<br>PLSF<br>Scane time fail | PLC scan time exceed |
| 61 | HAND<br>Warning<br>PCGd<br>CAN/M Guard err | CAN Master guarding error |
| 62 | HAND<br>Warning<br>PCbF<br>CAN/M bus off | CAN Master bus off |
| 63 | HAND<br>Warning<br>PCnL<br>CAN/M Node Lack | CAN Master node error |
| 64 | HAND<br>Warning<br>PCCt<br>CAN/M Cycle Time | CAN/M cycle time-out |
| 65 | HAND<br>Warning<br>PCSF<br>CAN/M SDO over | CAN/M SDOover |
| 66 | HAND<br>Warning<br>PCSd<br>CAN/M Sdo Tout | CAN/M SDO time-out |
| 67 | HAND<br>Warning<br>PCAd<br>CAN/M Addres set | CAN/M station address error |

| ID No. | Display on LCM Keypad | Descriptions |
|---|---|---|
| 68 | HAND<br>Warning<br>PCTo<br>CAN/M T-Out | PLC/CAN Master Slave communication time out |
| 69 | Reserved | |
| 70 | HAND<br>Warning<br>ECid<br>ExCom ID failed | Duplicate MAC ID error<br>Node address setting error |
| 71 | HAND<br>Warning<br>ECLv<br>ExCom pwr loss | Low voltage of communication card |
| 72 | HAND<br>Warning<br>ECtt<br>ExCom Test Mode | Communication card in test mode |
| 73 | HAND<br>Warning<br>ECbF<br>ExCom Bus off | DeviceNet bus-off |
| 74 | HAND<br>Warning<br>ECnP<br>ExCom No power | DeviceNet no power |
| 75 | HAND<br>Warning<br>ECFF<br>ExCom Facty def | Factory default setting error |
| 76 | HAND<br>Warning<br>ECiF<br>ExCom Inner err | Serious internal error |
| 77 | HAND<br>Warning<br>ECio<br>ExCom IONet brk | IO connection break off |
| 78 | HAND<br>Warning<br>ECPP<br>ExCom Pr data | Profibus parameter data error |
| 79 | HAND<br>Warning<br>ECPi<br>ExCom Conf data | Profibus configuration data error |
| 80 | HAND<br>Warning<br>ECEF<br>ExCom Link fail | Ethernet Link fail |

| ID No. | Display on LCM Keypad | Descriptions |
|---|---|---|
| 81 | HAND<br>Warning<br>ECto<br>ExCom Inr T-out | Communication time-out for communication card and drive |
| 82 | HAND<br>Warning<br>ECCS<br>ExCom Inr CRC | Check sum error for Communication card and drive |
| 83 | HAND<br>Warning<br>ECrF<br>ExCom Rtn def | Communication card returns to default setting |
| 84 | HAND<br>Warning<br>ECo0<br>ExCom MTCP over | Modbus TCP exceed maximum communication value |
| 85 | HAND<br>Warning<br>ECo1<br>ExCom EIP over | EtherNet/IP exceed maximum communication value |
| 86 | HAND<br>Warning<br>ECiP<br>ExCom IP fail | IP fail |
| 87 | HAND<br>Warning<br>EC3F<br>ExCom Mail fail | Mail fail |
| 88 | HAND<br>Warning<br>Ecby<br>ExCom Busy | Communication card busy |
| 89 | Reserved | |
| 90 | HAND<br>Warning<br>CPLP<br>Copy PLC Pass Wd | Copy PLC password error |
| 91 | HAND<br>Warning<br>CPL0<br>Copy PLC Mode Rd | Copy PLC Read mode error |
| 92 | HAND<br>Warning<br>CPL1<br>Copy PLC Mode Wt | Copy PLC Write mode error |
| 93 | HAND<br>Warning<br>CPLv<br>Copy PLC Version | Copy PLC Version error |

| ID No. | Display on LCM Keypad | Descriptions |
|---|---|---|
| 94 | 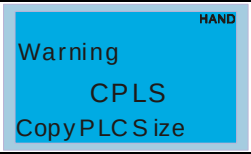 | Copy PLC Capacity size error |
| 95 | | Copy PLC: Disable PLC functions to copy |
| 96 | 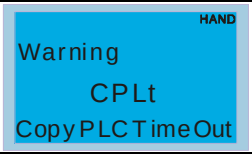 | Copy PLC time out |
| 97 | Reserved | |
| 98 | Reserved | |
| 99 | Reserved | |
| 100 | Reserved | |
| 101 | 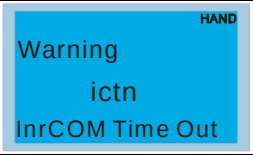 | Internal communication is off |

# *Chapter 14 Fault Codes and Descriptions*

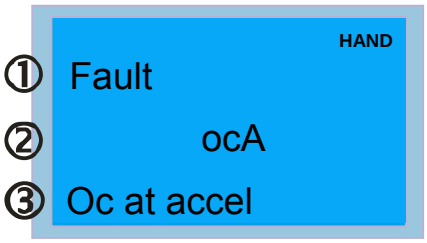


① Display error signal

② Abbreviate error code
The code is displayed as shown on KPC-CE01.

③ Display error description

* Refer to setting of Pr06-17~Pr06~22.

| ID* | Fault Name | Fault Descriptions | Corrective Actions |
|---|---|---|---|
| 1 | HAND<br>Fault<br>ocA<br>Oc at accel | Over-current during acceleration<br>(Output current exceeds triple rated current during acceleration.) | 1. Short-circuit at motor output: Check for possible poor insulation at the output.<br>2. Acceleration Time too short: Increase the Acceleration Time.<br>3. AC motor drive output power is too small: Replace the AC motor drive with the next higher power model. |
| 2 | HAND<br>Fault<br>ocd<br>Oc at decel | Over-current during deceleration<br>(Output current exceeds triple rated current during deceleration.) | 1. Short-circuit at motor output: Check for possible poor insulation at the output.<br>2. Deceleration Time too short: Increase the Deceleration Time.<br>3. AC motor drive output power is too small: Replace the AC motor drive with the next higher power model. |
| 3 | HAND<br>Fault<br>ocn<br>Oc at normal SPD | Over-current during steady state operation<br>(Output current exceeds triple rated current during constant speed.) | 1. Short-circuit at motor output: Check for possible poor insulation at the output.<br>2. Sudden increase in motor loading: Check for possible motor stall.<br>3. AC motor drive output power is too small: Replace the AC motor drive with the next higher power model. |
| 4 | HAND<br>Fault<br>GFF<br>Ground fault | Ground fault | When (one of) the output terminal(s) is grounded, short circuit current is more than 50% of AC motor drive rated current, the AC motor drive power module may be damaged.<br>NOTE: The short circuit protection is provided for AC motor drive protection, not for protecting the user.<br>1. Check the wiring connections between the AC motor drive and motor for possible short circuits, also to ground.<br>2. Check whether the IGBT power module is damaged.<br>3. Check for possible poor insulation at the output. |
| 5 | HAND<br>Fault<br>occ<br>Short Circuit | Short-circuit is detected between upper bridge and lower bridge of the IGBT module | Return to the factory |

| ID* | Fault Name | Fault Descriptions | Corrective Actions |
|---|---|---|---|
| 6 | HAND<br>Fault<br>ocS<br>Oc at stop | Hardware failure in current detection | Return to the factory |
| 7 | HAND<br>Fault<br>ovA<br>Ov at accel | DC BUS over-voltage during acceleration (230V: DC 450V; 460V: DC 900V) | 1. Check if the input voltage falls within the rated AC motor drive input voltage range.<br>2. Check for possible voltage transients.<br>3. If DC BUS over-voltage due to regenerative voltage, please increase the acceleration time or add an optional brake resistor. |
| 8 | HAND<br>Fault<br>ovd<br>Ov at decel | DC BUS over-voltage during deceleration (230V: DC 450V; 460V: DC 900V) | 1. Check if the input voltage falls within the rated AC motor drive input voltage range.<br>2. Check for possible voltage transients.<br>3. If DC BUS over-voltage due to regenerative voltage, please increase the Deceleration Time or add an optional brake resistor. |
| 9 | HAND<br>Fault<br>ovn<br>Ov at normal SPD | DC BUS over-voltage at constant speed (230V: DC 450V; 460V: DC 900V) | 1. Check if the input voltage falls within the rated AC motor drive input voltage range.<br>2. Check for possible voltage transients.<br>3. If DC BUS over-voltage due to regenerative voltage, please increase the Deceleration Time or add an optional brake resistor. |
| 10 | HAND<br>Fault<br>ovS<br>Ov at stop | Hardware failure in voltage detection | 1. Check if the input voltage falls within the rated AC motor drive input voltage range.<br>2. Check for possible voltage transients. |
| 11 | HAND<br>Fault<br>LvA<br>Lv at accel | DC BUS voltage is less than Pr.06-00 during acceleration | 1. Check if the input voltage is normal<br>2. Check for possible sudden load |
| 12 | HAND<br>Fault<br>Lvd<br>Lv at decel | DC BUS voltage is less than Pr.06-00 during deceleration | 1. Check if the input voltage is normal<br>2. Check for possible sudden load |
| 13 | HAND<br>Fault<br>Lvn<br>Lv at normal SPD | DC BUS voltage is less than Pr.06-00 in constant speed | 1. Check if the input voltage is normal<br>2. Check for possible sudden load |
| 14 | HAND<br>Fault<br>LvS<br>Lv at stop | DC BUS voltage is less than Pr.06-00 at stop | 1. Check if the input voltage is normal<br>2. Check for possible sudden load |

| ID* | Fault Name | Fault Descriptions | Corrective Actions |
|---|---|---|---|
| 15 | HAND<br>Fault<br>OrP<br>Phase lacked | Phase Loss | Check Power Source Input if all 3 input phases are connected without loose contacts.<br>For models 40hp and above, please check if the fuse for the AC input circuit is blown. |
| 16 | HAND<br>Fault<br>oH1<br>IGBT over heat | IGBT overheating<br>IGBT temperature exceeds protection level | 1. Ensure that the ambient temperature falls within the specified temperature range.<br>2. Make sure that the ventilation holes are not obstructed.<br>3. Remove any foreign objects from the heatsinks and check for possible dirty heat sink fins.<br>4. Check the fan and clean it.<br>5. Provide enough spacing for adequate ventilation. |
| 17 | HAND<br>Fault<br>oH2<br>Heat Sink oH | Heatsink overheating<br>Capacitance temperature exceeds cause heatsink overheating. | 1. Ensure that the ambient temperature falls within the specified temperature range.<br>2. Make sure heat sink is not obstructed. Check if the fan is operating<br>3. Check if there is enough ventilation clearance for AC motor drive. |
| 18 | HAND<br>Fault<br>tH1o<br>Thermo 1 open | IGBT Hardware Error | Return to the factory |
| 19 | HAND<br>Fault<br>tH2o<br>Thermo 2 open | Capacitor Hardware Error | Return to the factory |
| 21 | HAND<br>Fault<br>oL<br>Over load | Overload<br>The AC motor drive detects excessive drive output current. | 1. Check if the motor is overloaded.<br>2. Take the next higher power AC motor drive model. |
| 22 | HAND<br>Fault<br>EoL1<br>Thermal relay 1 | Electronics thermal relay 1 protection | 1. Check the setting of electronics thermal relay (Pr.06-14)<br>Take the next higher power AC motor drive model |
| 23 | HAND<br>Fault<br>EoL2<br>Thermal relay 2 | Electronics thermal relay 2 protection | 1. Check the setting of electronics thermal relay (Pr.06-28)<br>2. Take the next higher power AC motor drive model |

| ID* | Fault Name | Fault Descriptions | Corrective Actions |
|---|---|---|---|
| 24 | HAND<br>Fault<br>oH3<br>Motor over heat | Motor overheating<br>The AC motor drive detecting internal temperature exceeds the setting of Pr.06-30 (PTC level) or Pr.06-57 (PT100 level 2). | 1. Make sure that the motor is not obstructed.<br>2. Ensure that the ambient temperature falls within the specified temperature range.<br>3. Change to a higher power motor. |
| 26 | HAND<br>Fault<br>ot1<br>Over torque 1 | These two fault codes will be displayed when output current exceeds the over-torque detection level (Pr.06-07 or Pr.06-10) and exceeds over-torque detection (Pr.06-08 or Pr.06-11) and it is set to 2 or 4 in Pr.06-06 or Pr.06-09. | 1. Check whether the motor is overloaded.<br>2. Check whether motor rated current setting (Pr.05-01) is suitable<br>3. Take the next higher power AC motor drive model. |
| 27 | HAND<br>Fault<br>ot2<br>Over torque 2 | | |
| 28 | HAND<br>Fault<br>uC<br>Under torque | Low current detection | Check Pr.06-71, Pr.06-72, Pr.06-73. |
| 30 | HAND<br>Fault<br>cF1<br>EEPROM write err | Internal EEPROM can not be programmed. | 1. Press “RESET” key to the factory setting<br>2. Return to the factory. |
| 31 | HAND<br>Fault<br>cF2<br>EEPROM read err | Internal EEPROM can not be read. | 1. Press “RESET” key to the factory setting<br>2. Return to the factory. |
| 33 | HAND<br>Fault<br>cd1<br>Ias sensor err | U-phase error | Reboots the power. If fault code is still displayed on the keypad please return to the factory |
| 34 | HAND<br>Fault<br>cd2<br>Ibs sensor err | V-phase error | Reboots the power. If fault code is still displayed on the keypad please return to the factory |
| 35 | HAND<br>Fault<br>cd3<br>Ics sensor err | W-phase error | Reboots the power. If fault code is still displayed on the keypad please return to the factory |

| ID* | Fault Name | Fault Descriptions | Corrective Actions |
|---|---|---|---|
| 36 | HAND<br>Fault<br>Hd0<br>cc HW error | CC (current clamp) | Reboots the power. If fault code is still displayed on the keypad please return to the factory |
| 37 | HAND<br>Fault<br>Hd1<br>Oc HW error | OC hardware error | Reboots the power. If fault code is still displayed on the keypad please return to the factory |
| 38 | HAND<br>Fault<br>Hd2<br>Ov HW error | OV hardware error | Reboots the power. If fault code is still displayed on the keypad please return to the factory |
| 39 | HAND<br>Fault<br>Hd3<br>occ HW error | Occ hardware error | Reboots the power. If fault code is still displayed on the keypad please return to the factory |
| 40 | HAND<br>Fault<br>AUE<br>Auto tuning err | Auto tuning error | 1. Check cabling between drive and motor<br>2. Try again. |
| 41 | HAND<br>Fault<br>AFE<br>PID Fbk error | PID loss (ACI) | 1. Check the wiring of the PID feedback<br>2. Check the PID parameters settings |
| 48 | HAND<br>Fault<br>ACE<br>ACI loss | ACI loss | 1. Check the ACI wiring<br>2. Check if the ACI signal is less than 4mA |
| 49 | HAND<br>Fault<br>EF<br>External fault | External Fault | 1. Input EF (N.O.) on external terminal is closed to GND. Output U, V, W will be turned off.<br>2. Give RESET command after fault has been cleared. |
| 50 | HAND<br>Fault<br>EF1<br>Emergency stop | Emergency stop | 1. When the multi-function input terminals MI1 to MI6 are set to emergency stop, the AC motor drive stops output U, V, W and the motor coasts to stop.<br>2. Press RESET after fault has been cleared. |
| 51 | HAND<br>Fault<br>bb<br>Base block | External Base Block | 1. When the external input terminal (B.B) is active, the AC motor drive output will be turned off.<br>2. Deactivate the external input terminal (B.B) to operate the AC motor drive again. |

| ID* | Fault Name | Fault Descriptions | Corrective Actions |
|---|---|---|---|
| 52 | HAND<br>Fault<br>Pcod<br>Password error | Password is locked. | Keypad will be locked. Turn the power ON after power OFF to re-enter the correct password. See Pr.00-07 and 00-08. |
| 53 | HAND<br>Fault<br>ccod<br>SW Code Error | Software version error | |
| 54 | HAND<br>Fault<br>CE1<br>PC err command | Illegal function code | Check if the function code is correct (function code must be 03, 06, 10, 63) |
| 55 | HAND<br>Fault<br>CE2<br>PC err address | Illegal data address (00H to 254H) | Check if the communication address is correct |
| 56 | HAND<br>Fault<br>CE3<br>PC err data | Illegal data value | Check if the data value exceeds max./min. value |
| 57 | HAND<br>Fault<br>CE4<br>PC slave fault | Data is written to read-only address | Check if the communication address is correct |
| 58 | HAND<br>Fault<br>CE10<br>PC time out | Modbus transmission time-out | |
| 59 | HAND<br>Fault<br>CP10<br>PU time out | Keypad transmission time-out | |
| 60 | HAND<br>Fault<br>bF<br>Braking fault | Brake resistor fault | If the fault code is still displayed on the keypad after pressing “RESET” key, please return to the factory. |
| 61 | HAND<br>Fault<br>ydc<br>Y-delta connect | Y-connection/Δ-connection switch error | 1. Check the wiring of the Y-connection/Δ-connection<br>2. Check the parameters settings |

| ID* | Fault Name | Fault Descriptions | Corrective Actions |
|---|---|---|---|
| 62 | HAND<br>Fault<br>dEb<br>Dec. Energy back | When Pr.07-13 is not set to 0 and momentary power off or power cut, it will display dEb during accel./decel. stop. | 1. Set Pr.07-13 to 0<br>2. Check if input power is stable |
| 63 | HAND<br>Fault<br>oSL<br>Over slip error | It will be displayed when slip exceeds Pr.05-26 setting and time exceeds Pr.05-27 setting. | 1. Check if motor parameter is correct (please decrease the load if overload<br>2. Check the settings of Pr.05-26 and Pr.05-27 |
| 64 | HAND<br>Fault<br>ryF<br>MC Fault | Electric valve switch error when executing Soft Start.<br>(This warning is for frame E and higher frame of AC drives)<br><br>Do not disconnect RST when drive is still operating. | |
| 72 | HAND<br>Fault<br>STL1<br>STO Loss 1 | STO1~SCM1 internal hardware detect error | |
| 73 | HAND<br>Fault<br>S1<br>S1-emergy stop | Emergency stop for external safety | |
| 74 | HAND<br>Fault<br>Fire<br>On Fire | Fire mode | |
| 76 | HAND<br>Fault<br>STO<br>STO | Safety Torque Off function active | |
| 77 | HAND<br>Fault<br>STL2<br>STO Loss 2 | STO2~SCM2 internal hardware detect error | |
| 78 | HAND<br>Fault<br>STL3<br>STO Loss 3 | STO1~SCM1 and STO2~SCM2 internal hardware detect error | |
| 79 | HAND<br>Fault<br>Uoc<br>U phase oc | U phase short circuit | |

| ID* | Fault Name | Fault Descriptions | Corrective Actions |
|---|---|---|---|
| 80 | HAND<br>Fault<br>Voc<br>V phase oc | V phase short circuit | |
| 81 | HAND<br>Fault<br>Woc<br>W phase oc | W phase short circuit | |
| 82 | HAND<br>Fault<br>OPHL<br>U phase lacked | Output phase loss (Phase U) | |
| 83 | HAND<br>Fault<br>OPHL<br>V phase lacked | Output phase loss (Phase V) | |
| 84 | HAND<br>Fault<br>OPHL<br>W phase lacked | Output phase loss (Phase W) | |
| 90 | HAND<br>Fault<br>Fstp<br>For ce Stop | Internal PLC forced to stop<br>Verify the setting of Pr.00-32 | |
| 99 | HAND<br>Fault<br>TRAP<br>CPU Trap Error | CPU trap error | |
| 101 | HAND<br>Fault<br>CGdE<br>Guarding T-out | CANopen guarding error | |
| 102 | HAND<br>Fault<br>CHbE<br>Heartbeat T-out | CANopen heartbeat error | |
| 103 | HAND<br>Fault<br>CSYE<br>SYNC T-out | CANopen synchronous error | |

| ID* | Fault Name | Fault Descriptions | Corrective Actions |
|---|---|---|---|
| 104 | HAND<br>Fault<br>CbFE<br>Can bus off | CANopen bus off error | |
| 105 | HAND<br>Fault<br>CIdE<br>Can bus Index Err | CANopen index error | |
| 106 | HAND<br>Fault<br>CAdE<br>Can bus Add. Err | CANopen station address error | |
| 107 | HAND<br>Fault<br>CFrE<br>Can bus off | CANopen memory error | |
| 111 | HAND<br>Fault<br>ictE<br>InrCom Time Out | Internal communication time-out | |

[ This page intentionally left blank ]

# *Chapter 15 CANopen Overview*

15-1 CANopen Overview

15-2 Wiring for CANopen

15-3 CANopen Communication Interface Description

15-4 CANopen Supporting Index

15-5 CANopen Fault Codes

15-6 CANopen LED Function

The built-in CANopen function is a kind of remote control. Master can control the AC motor drive by using CANopen protocol. CANopen is a CAN-based higher layer protocol. It provides standardized communication objects, including real-time data (Process Data Objects, PDO), configuration data (Service Data Objects, SDO), and special functions (Time Stamp, Sync message, and Emergency message). And it also has network management data, including Boot-up message, NMT message, and Error Control message. Refer to CiA website http://www.can-cia.org/ for details. The content of this instruction sheet may be revised without prior notice. Please consult our distributors or download the most updated version at http://www.delta.com.tw/industrialautomation

***Delta CANopen supporting functions:***

- Support CAN2.0A Protocol;
- Support CANopen DS301 V4.02;
- Support DSP-402 V2.0.

***Delta CANopen supporting services:***

- PDO (Process Data Objects): PDO1~ PDO4
- SDO (Service Data Object):
  Initiate SDO Download;
  Initiate SDO Upload;
  Abort SDO;
  SDO message can be used to configure the slave node and access the Object Dictionary in every node.
- SOP (Special Object Protocol):
  Support default COB-ID in Predefined Master/Slave Connection Set in DS301 V4.02;
  Support SYNC service;
  Support Emergency service.
- NMT (Network Management):
  Support NMT module control;
  Support NMT Error control;
  Support Boot-up.

***Delta CANopen not supporting service:***

- Time Stamp service

# 15-1 CANopen Overview

## CANopen Protocol

CANopen is a CAN-based higher layer protocol, and was designed for motion-oriented machine control networks, such as handling systems. Version 4.02 of CANopen (CiA DS301) is standardized as EN50325-4. The CANopen specifications cover application layer and communication profile (CiA DS301), as well as a framework for programmable devices (CiA 302), recommendations for cables and connectors (CiA 303-1) and SI units and prefix representations (CiA 303-2).

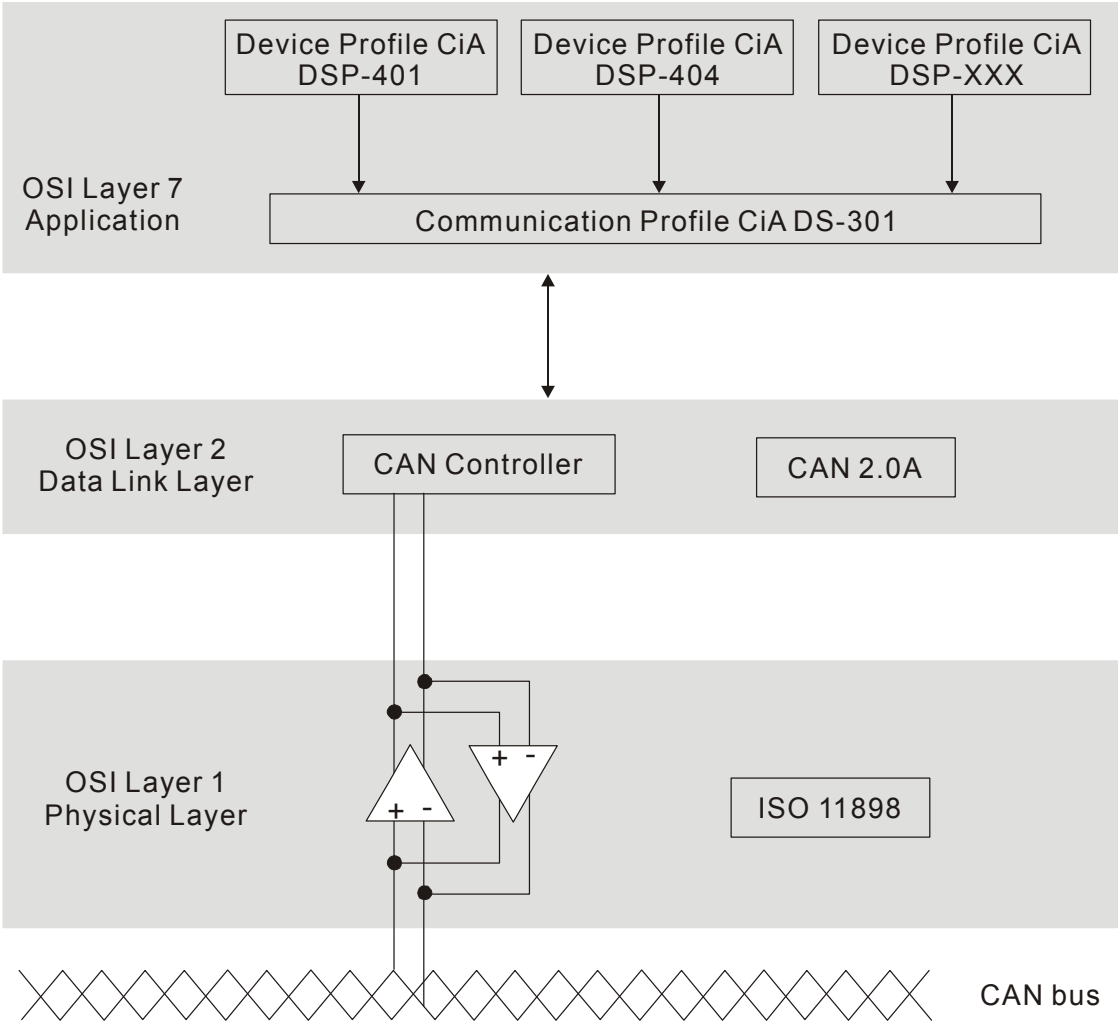


**RJ-45 Pin Definition**

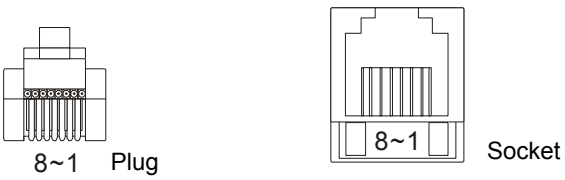


| PIN | Signal | Description |
|---|---|---|
| 1 | CAN_H | CAN_H bus line (dominant high) |
| 2 | CAN_L | CAN_L bus line (dominant low) |
| 3 | CAN_GND | Ground / 0V /V- |
| 6 | CAN_GND | Ground / 0V /V- |

# CANopen Communication Protocol

It has services as follows:

- NMT (Network Management Object)
- SDO (Service Data Objects)
- PDO (Process Data Object)
- EMCY (Emergency Object)

## NMT (Network Management Object)

The Network Management (NMT) follows a Master/Slave structure for executing NMT service. Only one NMT master is in a network, and other nodes are regarded as slaves. All CANopen nodes have a present NMT state, and NMT master can control the state of the slave nodes. The state diagram of a node is shown as follows:

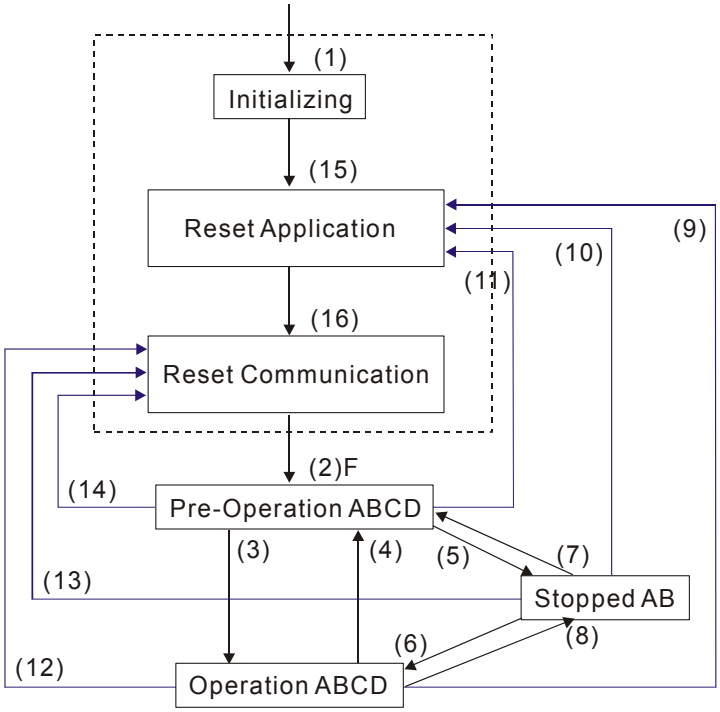


(1) After power is applied, it is auto in initialization state
(2) Enter pre-operational state automatically
(3) (6) Start remote node
(4) (7) Enter pre-operational state
(5) (8) Stop remote node
(9) (10) (11) Reset node
(12) (13) (14) Reset communication
(15) Enter reset application state automatically
(16) Enter reset communication state automatically

A: NMT
B: Node Guard
C: SDO
D: Emergency
E: PDO
F: Boot-up

| | Initializing | Pre-Operational | Operational | Stopped |
|---|---|---|---|---|
| PDO | | | ○ | |
| SDO | | ○ | ○ | |
| SYNC | | ○ | ○ | |
| Time Stamp | | ○ | ○ | |
| EMCY | | ○ | ○ | |
| Boot-up | ○ | | | |
| NMT | | ○ | ○ | ○ |

## SDO (Service Data Objects)

SDO is used to access the Object Dictionary in every CANopen node by Client/Server model. One SDO has two COB-ID (request SDO and response SDO) to upload or download data between two nodes. No data limit for SDOs to transfer data. But it needs to transfer by segment when data exceeds 4 bytes with an end signal in the last segment.

The Object Dictionary (OD) is a group of objects in CANopen node. Every node has an OD in the system, and OD contains all parameters describing the device and its network behavior. The access path of OD is the index and sub-index, each object has a unique index in OD, and has sub-index if necessary. The request and response frame structure of SDO communication is shown as follows:

## PDO (Process Data Object)

PDO communication can be described by the producer/consumer model. Each node of the network will listen to the messages of the transmission node and distinguish if the message has to be processed or not after receiving the message. PDO can be transmitted from one device to one another device or to many other devices. Every PDO has two PDO services: a TxPDO and a RxPDO. PDOs are transmitted in a non-confirmed mode.

PDO Transmission type is defined in the PDO communication parameter index (1400h for the 1st RxPDO or 1800h for the 1st TxPDO), and all transmission types are listed in the following table:

| Type Number | PDO | | | | |
|---|---|---|---|---|---|
| | Cyclic | Acyclic | Synchronous | Asynchronous | RTR only |
| 0 | | ○ | ○ | | |
| 1-240 | ○ | | ○ | | |
| 241-251 | Reserved | | | | |
| 252 | | | ○ | | ○ |
| 253 | | | | ○ | ○ |
| 254 | | | | ○ | |
| 255 | | | | ○ | |

Type number 1-240 indicates the number of SYNC message between two PDO transmissions.
Type number 252 indicates the data is updated (but not sent) immediately after receiving SYNC.
Type number 253 indicates the data is updated immediately after receiving RTR.
Type number 254: Delta CANopen doesn't support this transmission format.
Type number 255 indicates the data is asynchronous transmission.
All PDO transmission data must be mapped to index via Object Dictionary.

## EMCY (Emergency Object)

When errors occurred inside the hardware, an emergency object will be triggered an emergency object will only be sent when an error is occurred. As long as there is nothing wrong with the hardware, there will be no emergency object to be served as a warning of an error message.

# 15-2 Wiring for CANopen

An external adapter card: EMC-COP01 is used for CANopen wiring to connect CANopen to VFD CP2000. The link is enabled by using RJ45 cable. The two farthest ends must be terminated with 120Ω terminating resistors.

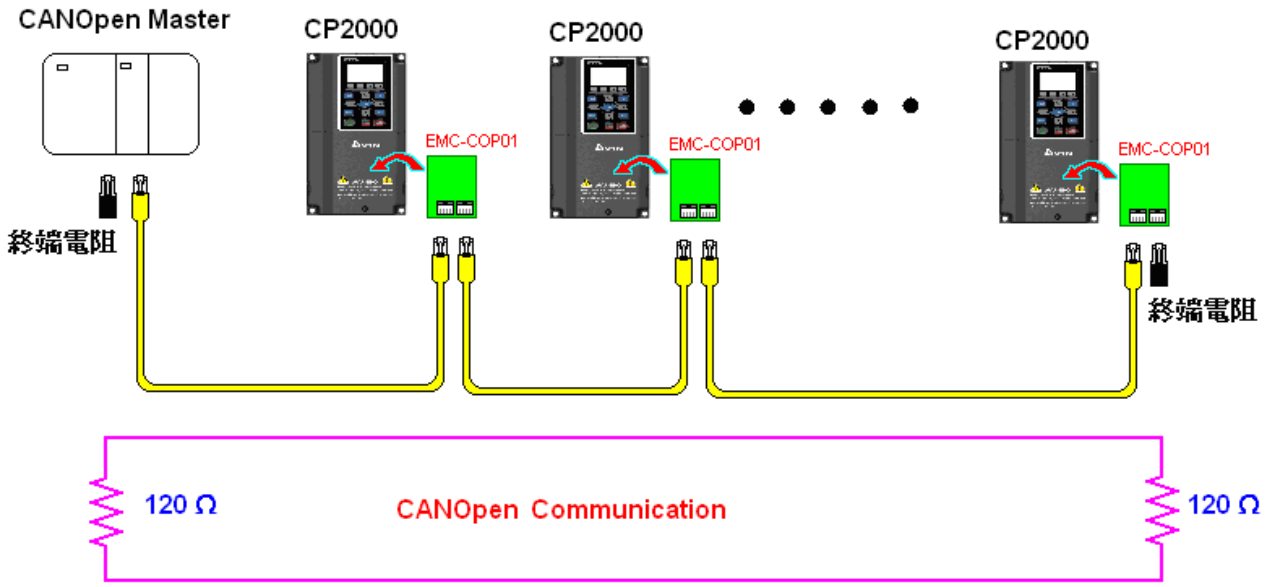

# 15-3 CANopen Communication Interface Description

## 15-3-1 CANopen Control Mode Selection

There are two control modes for CANopen; Pr.09-40 set to 1 is the factory setting mode DS402 standard and Pr.09-40 set to 0 is Delta's standard setting mode.

Actually, there are two control modes according to Delta's standard, one is the old control mode (Pr09-30=0). This control mode can only control the motor drive under frequency control. Another mode is a new standard (Pr09-30=1). This new control mode allows the motor drive to be controlled under all sorts of mode. Currently, CP2000 only supports speed mode.
The definition of relating control mode is:

| CANopen Control Mode Selection | Control Mode | |
|---|---|---|
| | Speed | |
| | Index | Description |
| DS402 standard Pr09-40=1 | 6042-00 | Target rotating speed (RPM) |
| | ----- | ----- |
| Delta Standard (Old definition) Pr09-40=0 Pr09-30=0 | 2020-02 | Target rotating speed (Hz) |
| Delta Standard (New definition) Pr09-40=0, Pr09-30=1 | 2060-03 | Target rotating speed (Hz) |
| | 2060-04 | Torque Limit (%) |

| CANopen Control Mode Selection | Operation Control | |
|---|---|---|
| | Index | Description |
| DS402 standard Pr. 09-40=1 | 6040-00 | Operation Command |
| | ----- | ----- |
| Delta Standard (Old definition) P09-40=0, P09-30=0 | 2020-01 | Operation Command |
| Delta Standard (New definition) Pr09-40=0, Pr09-30=1 | 2060-01 | Operation Command |
| | ----- | ----- |

| CANopen Control Mode Selection | Other | |
|---|---|---|
| | Index | Description |
| DS402 standard Pr. 09-40=1 | 605A-00 | Quick stop processing method |
| | 605C-00 | Disable operation processing method |
| Delta Standard (Old definition) Pr09-40=1, Pr09-30=0 | ----- | ----- |
| Delta Standard (New definition) Pr09-40=0, Pr09-30=1 | ----- | ----- |
| | ----- | ----- |

However, you can use some index regardless DS402 or Delta's standard.

For example:

1. Index which are defined as RO attributes.
2. Index correspond to parameters such as (2000 ~200B-XX)
3. Accelerating/Decelerating Index: 604F 6050
4. Control mode: Index : 6050

# 15-3-2 DS402 Standard Control Mode

## 15-3-2-1 Related set up of AC motor drive (by following DS402 standard)

If you want to use DS402 standard to control the motor drive, please follow the steps below:

1. Wiring for hardware (refer to chapter 15-2 Wiring for CANopen)
2. Operation source setting: set Pr.00-21 = 3 for CANopen communication card control.
3. Frequency source setting: set Pr.00.20 = 6. (Choose source of frequency commend from CANopen setting.)
4. Set DS402 as control mode: Pr09-40=1
5. CANopen station setting: set Pr.09-36 (Range of setting is 1~127. When Pr.09-36=0, CANopen slave function is disabled. ) (Note: If error occurs (CAdE or CANopen memory error) as station setting is completed, press Pr.00-02=7 for reset.)
6. CANopen baud rate setting: set Pr.09.37 (CANBUS Baud Rate: 1M(0), 500K(1), 250K(2), 125K(3), 100K(4) and50K(5))
7. Set multiple input functions to Quick Stop (it can also enable or disable, default setting is disabled). If it is necessary to enable the function, set MI terminal to 53 in one of the following parameter: Pr.02.01 ~Pr.02.08 or Pr.02.26 ~ Pr.02.31. (Note: This function is available in DS402 only.)

## **15-3-2-2** The status of the motor drive (by following DS402 standard)

According to the DS402 definition, the motor drive is divided into 3 blocks and 9 statuses as described below.

**3 blocks**

Power Disable: That means without PWM output

Power Enable: That means with PWM output

Fault: One or more than one error has occurred.

**9 statuses**

Start: Power On

Not ready to switch on: The motor drive is initiating.

Switch On Disable: When the motor drive finishes the initiation, it will be at this mode.

Ready to switch on: Warming up before running.

Switch On: The motor derive has the PWM output now, but the reference commend is not effective.

Operate Enable: Able to control normally.

Quick Stop Active: When there is a Quick Stop request, you have to stop running the motor drive.

Fault Reaction Active: The motor drive detects conditions which might trigger error(s).

Fault: One or more than errors has occurred to the motor drive.

Therefore, when the motor drive is turned on and finishes the initiation, it will remain at Ready to Switch on status. To control the operation of the motor drive, you need to change this status to Operate Enable status. The way to change it is to commend the control word's bit0 ~ bit3 and bit7 of the Index 6040H and to pair with Index Status Word (Status Word 0X6041). The control steps and index definition are described as below:

Index 6040

| 15~9 | 8 | 7 | 6~4 | 3 | 2 | 1 | 0 |
|---|---|---|---|---|---|---|---|
| Reserved | Halt | Fault Reset | Operation | Enable operation | Quick Stop | Enable Voltage | Switch On |

Index 6041

| 15~14 | 13~12 | 11 | 10 | 9 | 8 | 7 | 6 | 5 | 4 | 3 | 2 | 1 | 0 |
|---|---|---|---|---|---|---|---|---|---|---|---|---|---|
| Reserved | Operation | Internal limit active | Target reached | Remote | Reserved | Warning | Switch on disabled | Quick stop | Voltage enabled | Fault | Operation enable | Switch on | Ready to switch on |

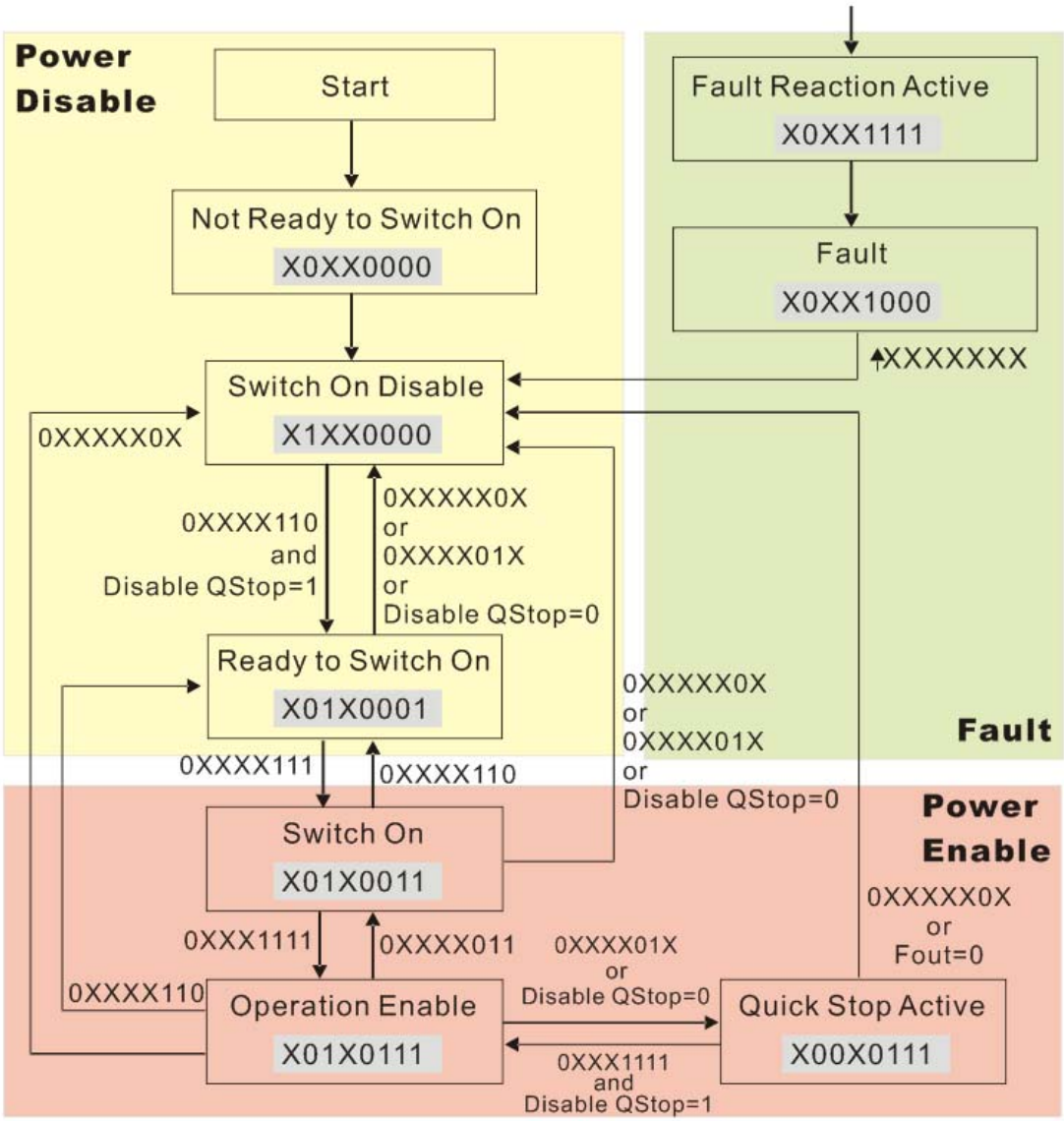


Set command 6040 =0xE, then set another command 6040 =0xF. Then the motor drive can be switched to Operation Enable. The Index 605A decides the dashed line of Operation Enable when the control mode changes from Quick Stop Active. (When the setting value is 1~3, this dashed line is active. But when the setting value of 605A is not 1~3, once he motor derive is switched to Quick Stop Active, it will not be able to switch back to Operation Enable.)

| Index | Sub | Definition | Factory Setting | R/W | Size | Unit | PDO Map | Mode | note |
|---|---|---|---|---|---|---|---|---|---|
| 605Ah | 0 | Quick stop option code | 2 | RW | S16 | | No | | 0: disable drive function<br>1:slow down on slow down ramp<br>2: slow down on quick stop ramp<br>3: slow down on the current limit<br>5 slow down on slow down ramp and stay in QUICK STOP<br>6 slow down on quick stop ramp and stay in QUICK STOP<br>7 slow down on the current limit and stay in Quick stop |

Besides, when the control section switches from Power Enable to Power Disable, use 605C to define parking method.

| Index | Sub | Definition | Factory Setting | R/W | Size | Unit | PDO Map | Mode | note |
|---|---|---|---|---|---|---|---|---|---|
| 605Ch | 0 | Disable operation option code | 1 | RW | S16 | | No | | 0: Disable drive function<br>1: Slow down with slow down ramp; disable of the drive function |

## 15-3-2-3 Various mode control method (by following DS402 standard)

CP2000 only supports speed control at present which is described as below:

**Speed mode**

1. Let AC Motor Drive be at the speed control mode: Set Index6060 to 2.
2. Switch to Operation Enable mode: Set 6040=0xE, then set 6040 = 0xF.
3. To set target frequency: Set target frequency of 6042, since the operation unit of 6042 is rpm, there is a transformation:

$$n = f \times \frac{120}{p}$$

n: rotation speed (rpm) (rounds/minute) P: motor's pole number (Pole)

f: rotation frequency (Hz)

For example:

Set 6042H = 1500 (rpm), if the motor drive's pole number is 4 (Pr05-04 or Pr05-16), then the motor drive's operation frequency is 1500(120/4)=50Hz.

Besides, the 6042 is defined as a signed operation. The plus or minus sign means to rotate clockwise or counter clockwise

4. To set acceleration and deceleration: Use 604F(Acceleration) and 6050(Deceleration).
5. Trigger an ACK signal: In the speed control mode, the bit 6~4 of Index 6040 needs to be controlled. It is defined as below:

| | Index 6040 | | | SUM |
|---|---|---|---|---|
| | Bit 6 | Bit 5 | Bit 4 | |
| Speed mode (Index 6060=2) | 1 | 0 | 1 | Locked at the current signal. |
| | 1 | 1 | 1 | Run to reach targeting signal. |
| | Other | | | Decelerate to 0Hz. |

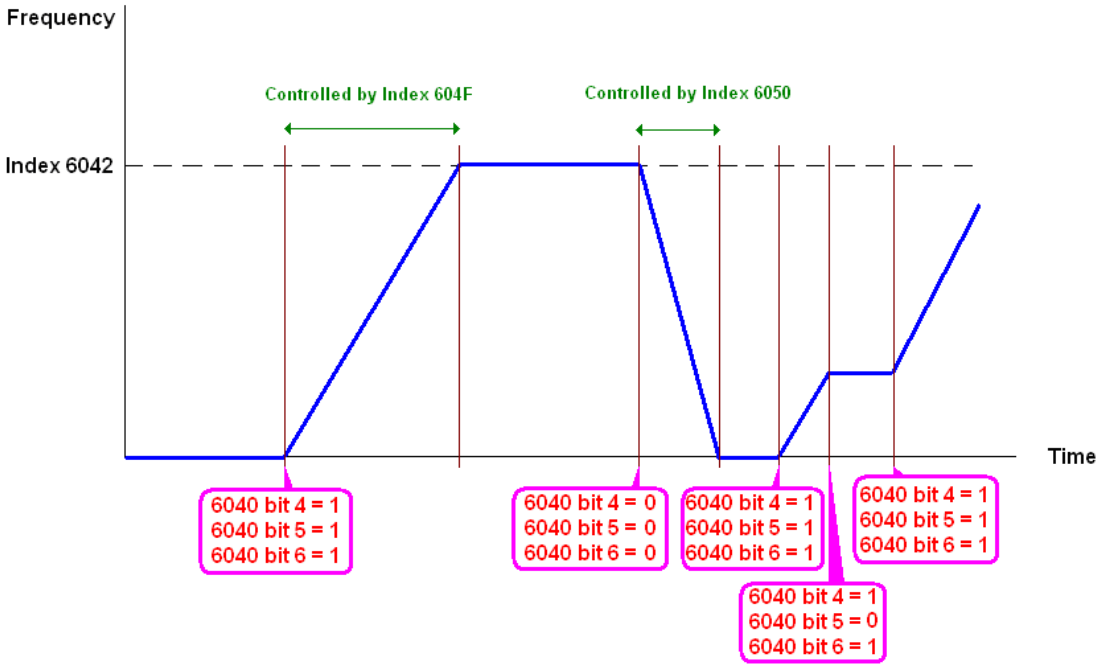


NOTE 01: To know the current rotation speed, read 6043. (Unit: rpm)

NOTE 02: To know if the rotation speed can reach the targeting value; read bit 10 of 6041. (0: Not reached; 1: Reached)

## 15-3-3 By using Delta Standard (Old definition, only support speed mode)

### 15-3-3-1 Various mode control method (by following DS402 standard)

If you want to use DS402 standard to control the motor drive, please follow the steps below:

1. Wiring for hardware (Refer to chapter 15-2 Wiring for CANopen)
2. Operation source setting: set Pr.00-21 to 3 for CANopen communication card control.
3. Frequency source setting: set Pr.00.20 to 6. (Choose source of frequency commend from CANopen setting.)
4. Set Delta Standard (Old definition, only support speed mode) as control mode: Pr. 09-40 = 0 and 09-30 = 0.
5. CANopen station setting: set Pr.09-36 (Range of setting is 1~127. When Pr.09-36=0, CANopen slave function is disabled. ) (Note: If error occurs (CAdE or CANopen memory error) as station setting is completed, press Pr.00-02=7 for reset.)
6. CANopen baud rate setting: set Pr.09.37 (CANBUS Baud Rate: 1M(0), 500K(1), 250K(2), 125K(3), 100K(4) and50K(5))

### 15-3-3-2 By speed mode

1. Set the target frequency: Set 2020-02, the unit is Hz, with a number of 2 decimal places. For example 1000 is 10.00.
2. Operation control: Set 2020-01 = 0002H for Running, and set 2020-01 = 0001H for Stopping.

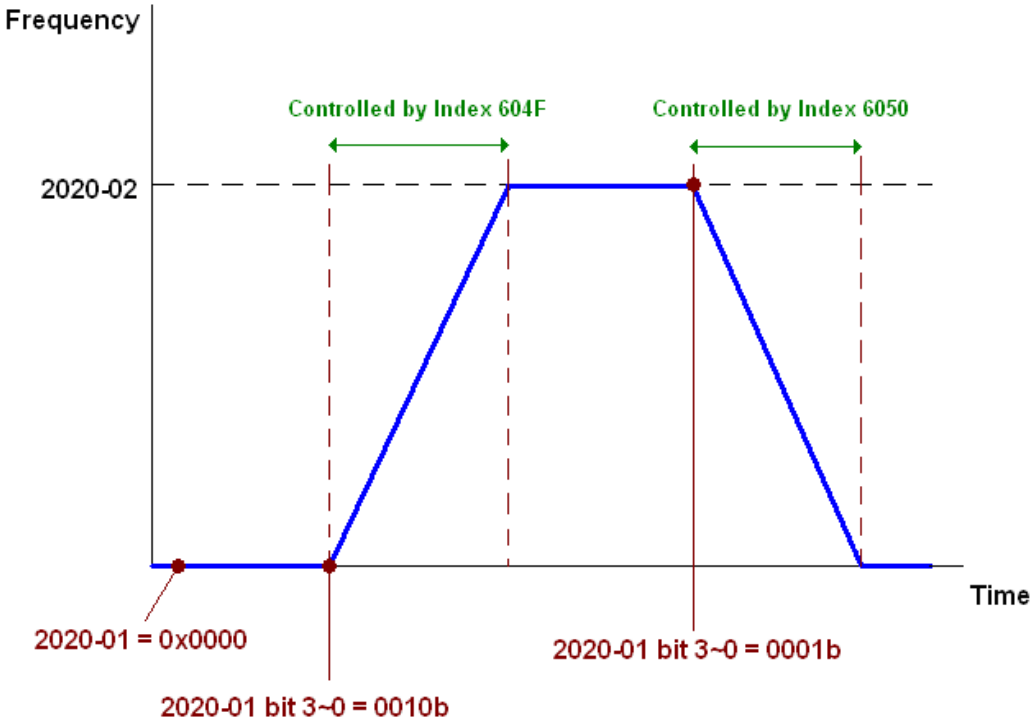

## 15-3-4 By using Delta Standard (New definition)

### 15-3-4-1 Related set up of ac motor drive (Delta New Standard)

If you want to use DS402 standard to control the motor drive, please follow the steps below:

1. Wiring for hardware (Refer to chapter 15-2 Wiring for CANopen)
2. Operation source setting: set Pr.00-21 to 3 for CANopen communication card control.
3. Frequency source setting: set Pr.00.20 to 6. (Choose source of frequency commend from CANopen setting.)
4. Set Delta Standard (Old definition, only support speed mode) as control mode: Pr. 09-40 = 0 and 09-30 = 0.
5. CANopen station setting: set Pr.09-36 (Range of setting is 1~127. When Pr.09-36=0, CANopen slave function is disabled. ) (Note: If error arised (CAdE or CANopen memory error) as station setting is completed, press Pr.00-02=7 for reset.)
6. CANopen baud rate setting: set Pr.09.37 (CANBUS Baud Rate: 1M(0), 500K(1), 250K(2), 125K(3), 100K(4) and50K(5))

## 15-3-4-2 Various mode control method (Delta New Standard)

**Speed Mode**

1. Let Ac Motor Drive be at the speed control mode: Set Index6060 = 2.
2. Set the target frequency: set 2060-03, unit is Hz, with a number of 2 decimal places. For example 1000 is 10.00Hz.
3. Operation control: set 2060-01 = 008H for Server on, and set 2060-01 = 0081H for Running.

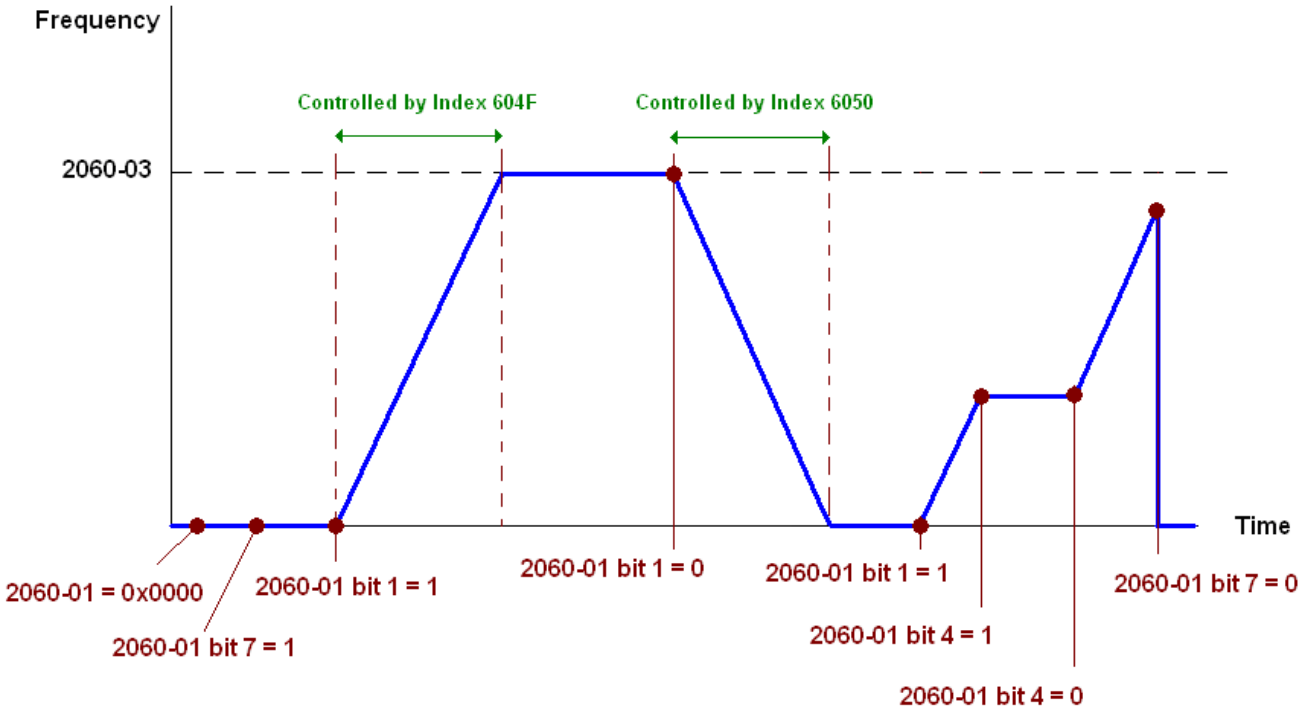


NOTE01: To know the current position, read 2061-05.

NOTE02: To know if reaching the target position, read bit 0 of 2061 (0: Not reached, 1: Reached).

# 15-3-5 DI/ DO/ AI/ AO are controlled via CANopen

To control the DO AO of the motor drive through CANopen, follow the steps below:

1. To set the DO to be controlled, define this DO to be controlled by CANopen. For example, set Pr02-14 to control RY2.
2. To set the DO to be controlled, define this AO to be controlled by CANopen. For example, set Pr03-23 to control AFM2.
3. To control the mapping index of CANopen. If you want to control DO, then you will need to control Index2026-41. If you want to control AO, then you will need to control 2026-AX. If you want to set RY2 as ON, set the bit 1 of Index 2026-41 =1, then RY2 will output 1. If you want to control AFM2 output = 50.00%, then you will need to set Index 2026-A2 =5000, then AFM2 will output 50%.

Mapping table of CANopen DI DO AI AO:

DI:

| Terminal | Related Parameters | R/W | Mapping Index |
|---|---|---|---|
| FWD | == | RO | 2026-01 bit 0 |
| REV | == | RO | 2026-01 bit 1 |
| MI 1 | == | RO | 2026-01 bit 2 |
| MI 2 | == | RO | 2026-01 bit 3 |
| MI 3 | == | RO | 2026-01 bit 4 |
| MI 4 | == | RO | 2026-01 bit 5 |
| MI 5 | == | RO | 2026-01 bit 6 |
| MI 6 | == | RO | 2026-01 bit 7 |
| MI 7 | == | RO | 2026-01 bit 8 |
| MI 8 | == | RO | 2026-01 bit 9 |
| MI 10 | == | RO | 2026-01 bit 10 |
| MI 11 | == | RO | 2026-01 bit 11 |
| MI 12 | == | RO | 2026-01 bit 12 |
| MI 13 | == | RO | 2026-01 bit 13 |
| MI 14 | == | RO | 2026-01 bit 14 |
| MI 15 | == | RO | 2026-01 bit 15 |

DO：

| Terminal | Related Parameters | R/W | Mapping Index |
|---|---|---|---|
| RY1 | P2-13 = 50 | RW | 2026-41 bit 0 |
| RY2 | P2-14 = 50 | RW | 2026-41 bit 1 |
| RY3 | P2-15 = 50 | RW | 2026-41 bit 2 |
| MO1 | P2-16 = 50 | RW | 2026-41 bit 3 |
| MO2 | P2-17 = 50 | RW | 2026-41 bit 4 |
| MO3 | P2-18 = 50 | RW | 2026-41 bit 5 |
| MO4 | P2-19 = 50 | RW | 2026-41 bit 6 |
| MO5 | P2-20 = 50 | RW | 2026-41 bit 7 |
| MO6 | P2-21 = 50 | RW | 2026-41 bit 8 |
| MO7 | P2-22 = 50 | RW | 2026-41 bit 9 |
| MO8 | P2-23 = 50 | RW | 2026-41 bit 10 |

AI：

| Terminal | Related Parameters | R/W | Mapping Index |
|---|---|---|---|
| AVI1 | == | RO | Value of 2026-61 |
| ACI | == | RO | Value of 2026-62 |
| AVI2 | == | RO | Value of 2026-63 |

AO：

| Terminal | Related Parameters | R/W | Mapping Index |
|---|---|---|---|
| AFM1 | P3-20 = 20 | RW | Value of 2026-A1 |
| AFM2 | P3-23 = 20 | RW | Value of 2026-A2 |

# 15-4 CANopen Supporting Index

CP2000 Index:

Parameter index corresponds to each other as following:

| **Index** | **sub-Index** |
|---|---|
| 2000H + Group | member+1 |

For example:

Pr.10.15 (Encoder Slip Error Treatment)

| **Group** | | **member** |
|---|---|---|
| 10(0$\overline{A}$H) | - | 15(0FH) |

Index = 2000H + 0AH = 200A

Sub Index = 0FH + 1H = 10H

CP2000 Control Index:

**Delta Standard Mode (Old definition)**

| Index | Sub | Definition | Factory Setting | R/W | Size | Note | |
|---|---|---|---|---|---|---|---|
| 2020H | 0 | Number | 3 | R | U8 | | |
| | 1 | Control word | 0 | RW | U16 | Bit 0~1 | 00B:disable |
| | | | | | | | 01B:stop |
| | | | | | | | 10B:disable |
| | | | | | | | 11B: JOG Enable |
| | | | | | | Bit2~3 | Reserved |
| | | | | | | Bit4~5 | 00B:disable |
| | | | | | | | 01B: Direction forward |
| | | | | | | | 10B: Reverse |
| | | | | | | | 11B: Switch Direction |
| | | | | | | Bit6~7 | 00B: 1st step Accel. /Decel. |
| | | | | | | | 01B: 2nd step Accel. /Decel. |
| | | | | | | | 10B: 3rd step Accel. /Decel. |
| | | | | | | | 11B: 4th step Accel. /Decel. |
| | | | | | | Bit8~15 | 0000B: Master speed |
| | | | | | | | 0001B: 1st step speed |
| | | | | | | | 0010B: 2nd step speed |
| | | | | | | | 0011B: 3rd step speed |
| | | | | | | | 0100B: 4th step speed |
| | | | | | | | 0101B: 5th step speed |
| | | | | | | | 0110B: 6th step speed |
| | | | | | | | 0111B: 7th step speed |
| | | | | | | | 1000B: 8th step speed |
| | | | | | | | 1001B: 9th step speed |
| | | | | | | | 1010B: 10th step speed |
| | | | | | | | 1011B: 11th step speed |
| | | | | | | | 1100B: 12th step speed |
| | | | | | | | 1101B: 13th step speed |
| | | | | | | | 1110B: 14th step speed |
| | | | | | | | 1111B: 15th step speed |
| | | | | | | Bit12 | 1: Enable the function of Bit6-11 |
| | | | | | | Bit13~14 | 00B: no function |
| | | | | | | | 01B: Operation command by the digital keypad |

| Index | Sub | Definition | Factory Setting | R/W | Size | Note | |
|---|---|---|---|---|---|---|---|
| | | | | | | | 10B: Operation command by Pr. 00-21 setting |
| | | | | | | | 11B: Switch the source of operation command |
| | | | | | | Bit 15 | Reserved |
| | 2 | Freq. command (XXX.XXHz) | 0 | RW | U16 | | |
| | 3 | Other trigger | 0 | RW | U16 | Bit0 | 1: E.F. ON |
| | | | | | | Bit1 | 1: Reset |
| | | | | | | Bit15~2 | Reserved |
| 2021H | 0 | Number | 10 | R | U8 | | |
| | 1 | Error code | 0 | R | U16 | High byte: Warn code<br>Low byte: Error code | |
| | 2 | AC motor drive status | 0 | R | U16 | Bit 1~0 | 00B: stop |
| | | | | | | | 01B: decelerate to stop |
| | | | | | | | 10B: waiting for operation command |
| | | | | | | | 11B: in operation |
| | | | | | | Bit 2 | 1: JOG command |
| | | | | | | Bit 3~4 | 00B: forward running |
| | | | | | | | 01B: switch from reverse running to forward running |
| | | | | | | | 10B: switch from forward running to reverse running |
| | | | | | | | 11B: reverse running |
| | | | | | | Bit 5~7 | Reserved |
| | | | | | | Bit 8 | 1: master frequency command controlled by communication interface |
| | | | | | | Bit 9 | 1: master frequency command controlled by analog signal input |
| | | | | | | Bit 10 | 1: operation command controlled by communication interface |
| | | | | | | Bit 11~15 | Reserved |
| | 3 | Freq. command (XXX.XXHz) | 0 | R | U16 | | |
| | 4 | Output freq. (XXX.XXHz) | 0 | R | U16 | | |
| | 5 | Output current (XX.XA) | 0 | R | U16 | | |
| | 6 | DC bus voltage (XXX.XV) | 0 | R | U16 | | |
| | 7 | Output voltage (XXX.XV) | 0 | R | U16 | | |
| | 8 | the current segment run by the multi-segment speed commend | 0 | R | U16 | | |
| | 9 | Reserved | 0 | R | U16 | | |
| | A | Display counter value（c） | 0 | R | U16 | | |
| | B | Display output power angle (XX.X°) | 0 | R | U16 | | |
| | C | Display output torque (XXX.X%) | 0 | R | U16 | | |
| | D | Display actual motor speed (rpm) | 0 | R | U16 | | |
| | - | - | - | - | - | | |
| | - | - | - | - | - | | |
| | 10 | power output (X.XXXKWH) | 0 | R | U16 | | |
| 2022H | 0 | Reserved | 0 | R | U16 | | |
| | 1 | Display output current | 0 | R | U16 | | |
| | 2 | Display counter value | 0 | R | U16 | | |

| Index | Sub | Definition | Factory Setting | R/W | Size | Note | |
|---|---|---|---|---|---|---|---|
| | 3 | Display actual output frequency (XXX.XXHz) | 0 | R | U16 | | |
| | 4 | Display DC-BUS voltage (XXX.XV) | 0 | R | U16 | | |
| | 5 | Display output voltage (XXX.XV) | 0 | R | U16 | | |
| | 6 | Display output power angle (XX.X°) | 0 | R | U16 | | |
| | 7 | Display output power in kW | 0 | R | U16 | | |
| | 8 | Display actual motor speed (rpm) | 0 | R | U16 | | |
| | 9 | Display estimate output torque (XXX.X%) | 0 | R | U16 | | |
| | - | - | - | - | - | - | |
| | B | Display PID feedback value after enabling PID function in % (To 2 decimal places) | 0 | R | U16 | | |
| | C | Display signal of AVI 1 analog input terminal, 0-10V corresponds to 0-100% (To 2 decimal places) | 0 | R | U16 | | |
| | D | Display signal of ACI analog input terminal, 4-V20mA/0-10V corresponds to 0-100% (To 2 decimal places) | 0 | R | U16 | | |
| | E | Display signal of AVI 2 analog input terminal, -10V~10V corresponds to -100~100% (To 2 decimal places) | 0 | R | U16 | | |
| | F | Display the IGBT temperature of drive power module in °C | 0 | R | U16 | | |
| | 10 | Display the temperature of capacitance in °C | 0 | R | U16 | | |
| | 11 | The status of digital input (ON/OFF), refer to Pr.02-12 | 0 | R | U16 | | |
| | 12 | The status of digital output (ON/OFF), refer to Pr.02-18 | 0 | R | U16 | | |
| | 13 | Display the multi-step speed that is executing | 0 | R | U16 | | |
| | 14 | The corresponding CPU pin status of digital input | 0 | R | U16 | | |
| | 15 | The corresponding CPU pin status of digital output | 0 | R | U16 | | |
| | - | - | - | - | - | | |
| | - | - | - | - | - | | |
| | - | - | - | - | - | | |
| | - | - | - | - | - | | |
| | 1A | Display times of counter overload (0.00~100.00%) | 0 | R | U16 | | |
| | 1B | Display GFF in % | 0 | R | U16 | | |
| | 1C | Display DCbus voltage ripples (Unit: Vdc) | 0 | R | U16 | | |
| | 1D | Display PLC register D1043 data | 0 | R | U16 | | |
| | 1E | Display Pole of Permanent Magnet Motor | 0 | R | U16 | | |
| | 1F | User page displays the value in physical measure | 0 | R | U16 | | |
| | 20 | Output Value of Pr.00-05 | 0 | R | U16 | | |

| Index | Sub | Definition | Factory Setting | R/W | Size | Note | |
|---|---|---|---|---|---|---|---|
| | 21 | Number of motor turns when drive operates | 0 | R | U16 | | |
| | 22 | Operation position of motor | 0 | R | U16 | | |
| | 23 | Fan speed of the drive | 0 | R | U16 | | |
| | 24 | Control mode of the drive 0: speed mode 1: torque mode | 0 | R | U16 | | |
| | 25 | Carrier frequency of the drive | 0 | R | U16 | | |

CANopen Remote IO mapping

| Index | Sub | R/W | Definition |
|---|---|---|---|
| 2026H | 01h | R | Each bit corresponds to the different input terminals |
| | 02h | R | Each bit corresponds to the different input terminals |
| | 03h~40h | R | Reserved |
| | 41h | RW | Each bit corresponds to the different output terminals |
| | 42h~60h | R | Reserved |
| | 61h | R | AVI (%) |
| | 62h | R | ACI (%) |
| | 63h | R | AUI (%) |
| | 64h~A0h | R | Reserved |
| | A1h | RW | AFM1 (%) |
| | A2h | RW | AFM2 (%) |

**Delta Standard Mode (New definition)**

| Index | sub | R/W | Size | Descriptions | | | Speed Mode |
|---|---|---|---|---|---|---|---|
| | | | | bit | Definition | Priority | |
| 2060h | 00h | R | U8 | | | | |
| | 01h | RW | U16 | 0 | Ack | 4 | 0:fcmd =0<br>1:fcmd = Fset(Fpid) |
| | | | | 1 | Dir | 4 | 0: FWD run command<br>1: REV run command |
| | | | | 2 | | | |
| | | | | 3 | Halt | | 0: drive run till target speed is attained<br>1: drive stop by declaration setting |
| | | | | 4 | Hold | | 0: drive run till target speed is attained<br>1: frequency stop at current frequency |
| | | | | 5 | JOG | | 0:JOG OFF<br>Pulse 1:JOG RUN |
| | | | | 6 | QStop | | Quick Stop |
| | | | | 7 | Power | | 0:Power OFF<br>1:Power ON |
| | | | | 14~8 | | | |
| | | | | 15 | | | Pulse 1: Fault code cleared |
| | 02h | RW | U16 | | | | |
| | 03h | RW | U16 | | | | Speed command (unsigned decimal) |
| | 04h | RW | U16 | | | | |
| | 05h | RW | S32 | | | | |
| | 06h | RW | | | | | |

| Index | sub | R/W | Size | Descriptions | | | Speed Mode |
|---|---|---|---|---|---|---|---|
| | | | | bit | Definition | Priority | |
| | 07h | RW | U16 | | | | |
| | 08h | RW | U16 | | | | |
| 2061h | 01h | R | U16 | 0 | Arrive | | Frequency attained |
| | | | | 1 | Dir | | 0: Motor FWD run<br>1: Motor REV run |
| | | | | 2 | Warn | | Warning |
| | | | | 3 | Error | | Error detected |
| | | | | 4 | | | |
| | | | | 5 | JOG | | JOG |
| | | | | 6 | QStop | | Quick stop |
| | | | | 7 | Power On | | Switch ON |
| | | | | 15~8 | | | |
| | 02h | R | | | | | |
| | 03h | R | U16 | | | | Actual output frequency |
| | 04h | R | | | | | |
| | 05h | R | S32 | | | | Actual position (absolute) |
| | 06h | R | | | | | |
| | 07h | R | S16 | | | | Actual torque |

## DS402 Standard

| Index | Sub | Definition | Factory Setting | R/W | Size | Unit | PDO Map | Mode | Note |
|---|---|---|---|---|---|---|---|---|---|
| 6007h | 0 | Abort connection option code | 2 | RW | S16 | | Yes | | 0: No action<br>2: Disable Voltage,<br>3: quick stop |
| 603Fh | 0 | Error code | 0 | R0 | U16 | | Yes | | |
| 6040h | 0 | Control word | 0 | RW | U16 | | Yes | | |
| 6041h | 0 | Status word | 0 | R0 | U16 | | Yes | | |
| 6042h | 0 | vl target velocity | 0 | RW | S16 | rpm | Yes | vl | |
| 6043h | 0 | vl velocity demand | 0 | RO | S16 | rpm | Yes | vl | |
| 6044h | 0 | vl control effort | 0 | RO | S16 | rpm | Yes | vl | |
| 604Fh | 0 | vl ramp function time | 10000 | RW | U32 | 1ms | Yes | vl | Unit must be: 100ms, and check if the setting is set to 0. |
| 6050h | 0 | vl slow down time | 10000 | RW | U32 | 1ms | Yes | vl | |
| 6051h | 0 | vl quick stop time | 1000 | RW | U32 | 1ms | Yes | vl | |
| 605Ah | 0 | Quick stop option code | 2 | RW | S16 | | No | | 0 : disable drive function<br>1 :slow down on slow down ramp<br>2: slow down on quick stop ramp<br>5 slow down on slow down ramp and stay in QUICK STOP<br>6 slow down on quick stop ramp and stay in QUICK STOP |
| 605Ch | 0 | Disable operation option code | 1 | RW | S16 | | No | | 0: Disable drive function<br>1: Slow down with slow down ramp; disable of the drive function |
| 6060h | 0 | Mode of operation | 2 | RW | S8 | | Yes | | 1: Profile Position Mode<br>2: Velocity Mode<br>4: Torque Profile Mode<br>6: Homing Mode |
| 6061h | 0 | Mode of operation display | 2 | RO | S8 | | Yes | | Same as above |

| Index | Sub | Definition | Factory Setting | R/W | Size | Unit | PDO Map | Mode | Note |
|---|---|---|---|---|---|---|---|---|---|
| 6071h | 0 | tq Target torque | 0 | RW | S16 | 0.1% | Yes | tq | Valid unit: 1% |
| 6072h | 0 | tq Max torque | 150 | RW | U16 | 0.1% | No | tq | Valid unit: 1% |
| 6075h | 0 | tq Motor rated current | 0 | RO | U32 | mA | No | tq | |
| 6077h | 0 | tq torque actual value | 0 | RO | S16 | 0.1% | Yes | tq | |
| 6078h | 0 | tq current actual value | 0 | RO | S16 | 0.1% | Yes | tq | |
| 6079h | 0 | tq DC link circuit voltage | 0 | RO | U32 | mV | Yes | tq | |

# 15-5 CANopen Fault Codes

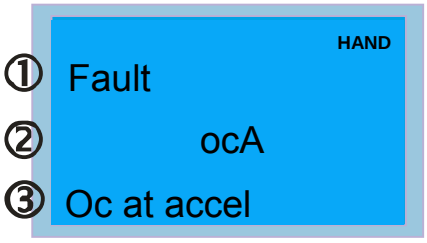


① Display error signal

② Abbreviate error code
The code is displayed as shown on KPC-CE01.

③ Display error description

* Follow the settings of Pr. 06-17~Pr. 06-22.

| ID No. | Display | Fault code | Description | CANopen fault register (bit 0~7) | CANopen fault code |
|---|---|---|---|---|---|
| 1 | HAND<br>Fault<br>ocA<br>Oc at accel | 0001H | Over-current during acceleration | 1 | 2213 H |
| 2 | HAND<br>Fault<br>ocd<br>Oc at decel | 0002H | Over-current during deceleration | 1 | 2213 H |
| 3 | HAND<br>Fault<br>ocn<br>Oc at normal SPD | 0003H | Over-current during steady status operation | 1 | 2214H |
| 4 | HAND<br>Fault<br>GFF<br>Ground fault | 0004H | Ground fault. When (one of) the output terminal(s) is grounded, short circuit current is more than 50% of AC motor drive rated current.<br>NOTE: The short circuit protection is provided for AC motor drive protection, not for protection of the user. | 1 | 2240H |
| 5 | HAND<br>Fault<br>occ<br>Short Circuit | 0005H | Short-circuit is detected between upper bridge and lower bridge of the IGBT module. | 1 | 2250H |
| 6 | HAND<br>Fault<br>ocS<br>Oc at stop | 0006H | Over-current at stop. Hardware failure in current detection | 1 | 2314H |
| 7 | HAND<br>Fault<br>ovA<br>Ov at accel | 0007H | Over-current during acceleration. Hardware failure in current detection | 2 | 3210H |
| 8 | HAND<br>Fault<br>ovd<br>Ov at decel | 0008H | Over-current during deceleration. Hardware failure in current detection. | 2 | 3210H |

| ID No. | Display | Fault code | Description | CANopen fault register (bit 0~7) | CANopen fault code |
|---|---|---|---|---|---|
| 9 | HAND<br>Fault<br>ovn<br>Ov at normal SPD | 0009H | Over-current during steady speed.<br>Hardware failure in current detection. | 2 | 3210H |
| 10 | HAND<br>Fault<br>ovS<br>Ov at stop | 000AH | Over-voltage at stop. Hardware failure in current detection | 2 | 3210H |
| 11 | HAND<br>Fault<br>LvA<br>Lv at accel | 000BH | DC BUS voltage is less than Pr.06.00 during acceleration. | 2 | 3220H |
| 12 | HAND<br>Fault<br>Lvd<br>Lv at decel | 000CH | DC BUS voltage is less than Pr.06.00 during deceleration. | 2 | 3220H |
| 13 | HAND<br>Fault<br>Lvn<br>Lv at normal SPD | 000DH | DC BUS voltage is less than Pr.06.00 in constant speed. | 2 | 3220H |
| 14 | HAND<br>Fault<br>LvS<br>Lv at stop | 000EH | DC BUS voltage is less than Pr.06-00 at stop | 2 | 3220H |
| 15 | HAND<br>Fault<br>OrP<br>Phase Lacked | 000FH | Phase Loss Protection | 2 | 3130H |
| 16 | HAND<br>Fault<br>oH1<br>IGBT over heat | 0010H | IGBT overheat<br>IGBT temperature exceeds protection level.<br>1~15HP: 90℃<br>20~100HP: 100℃ | 3 | 4310H |
| 17 | HAND<br>Fault<br>oH2<br>Hear Sink oH | 0011H | Heat sink overheat<br>Heat sink temperature exceeds 90oC | 3 | 4310H |
| 18 | HAND<br>Fault<br>tH1o<br>Thermo 1 open | 0012H | Temperature detection circuit error (IGBT)<br>IGBT NTC | 3 | FF00H |
| 19 | HAND<br>Fault<br>tH2o<br>Thermo 2 open | 0013H | Temperature detection circuit error (capacity module)<br>CAP NTC | 3 | FF01H |

| ID No. | Display | Fault code | Description | CANopen fault register (bit 0~7) | CANopen fault code |
|---|---|---|---|---|---|
| 21 | HAND<br>Fault<br>oL<br>Inverter oL | 0015H | Overload. The AC motor drive detects excessive drive output current.<br>NOTE: The AC motor drive can withstand up to 150% of the rated current for a maximum of 60 seconds. | 1 | 2310H |
| 22 | HAND<br>Fault<br>EoL1<br>Thermal relay 1 | 0016H | Electronics thermal relay 1 protection | 1 | 2310H |
| 23 | HAND<br>Fault<br>EoL2<br>Thermal relay 2 | 0017H | Electronics thermal relay 2 protection | 1 | 2310H |
| 24 | HAND<br>Fault<br>oH3<br>Motor over heat | 0018H | Motor PTC overheat | 3 | FF20H |
| 26 | HAND<br>Fault<br>ot1<br>Over torque 1 | 001AH | These two fault codes will be displayed when output current exceeds the over-torque detection level (Pr.06.07 or Pr.06.10) and exceeds over-torque detection (Pr.06.08 or Pr.06.11) and it is set 2 or 4 in Pr.06-06 or Pr.06-09. | 3 | 8311H |
| 27 | HAND<br>Fault<br>ot2<br>Over torque 2 | 001BH | | 3 | 8311H |
| 28 | HAND<br>Fault<br>uC<br>Under torque 1 | 001CH | Low current | 1 | 8321H |
| 30 | HAND<br>Fault<br>cF1<br>EEPROM write Err | 001EH | Internal EEPROM can not be programmed. | 5 | 5530H |
| 31 | HAND<br>Fault<br>cF2<br>EEPROM read Err | 001FH | Internal EEPROM can not be read. | 5 | 5530H |
| 33 | HAND<br>Fault<br>cd1<br>Ias sensor Err | 0021H | U-phase error | 1 | FF04H |
| 34 | HAND<br>Fault<br>cd2<br>Ibs sensor Err | 0022H | V-phase error | 1 | FF05H |

| ID No. | Display | Fault code | Description | CANopen fault register (bit 0~7) | CANopen fault code |
|---|---|---|---|---|---|
| 35 | HAND<br>Fault<br>cd3<br>Ics sensor Err | 0023H | W-phase error | 1 | FF06H |
| 36 | HAND<br>Fault<br>Hd0<br>cc HW Error | 0024H | cc (current clamp) hardware error | 5 | FF07H |
| 37 | HAND<br>Fault<br>Hd1<br>oc HW Error | 0025H | oc hardware error | 5 | FF08H |
| 38 | HAND<br>Fault<br>Hd2<br>ov HW Error | 0026H | ov hardware error | 5 | FF09H |
| 39 | HAND<br>Fault<br>Hd3<br>GFF HW Error | 0027H | GFF hardware error | 5 | FF0AH |
| 40 | HAND<br>Fault<br>AUE<br>Auto tuning Err | 0028H | Auto tuning error | 1 | FF21H |
| 41 | HAND<br>Fault<br>AFE<br>PID Fbk Error | 0029H | PID loss (ACI) | 7 | FF22H |
| 48 | HAND<br>Fault<br>ACE<br>ACI loss | 0030H | ACI loss | 1 | FF25H |
| 49 | HAND<br>Fault<br>EF<br>External Fault | 0031H | External Fault<br>When input EF (N.O.) on external terminal is closed to GND, AC motor drive stops output U, V, and W. | 5 | 9000H |
| 50 | HAND<br>Fault<br>EF1<br>Emergency stop | 0032H | Emergency stop<br>When the multi-function input terminals MI1 to MI6 are set to emergency stop, the AC motor drive stops output U, V, W and the motor coasts to stop. | 5 | 9000H |
| 51 | HAND<br>Fault<br>bb<br>Base block | 0033H | External Base Block<br>When the external input terminals MI1 to MI16 are set as bb and active, the AC motor drive output will be turned off | 5 | 9000H |

| ID No. | Display | Fault code | Description | CANopen fault register (bit 0~7) | CANopen fault code |
|---|---|---|---|---|---|
| 52 | HAND<br>Fault<br>Pcod<br>Password Error | 0034H | Password will be locked if three fault passwords are entered | 5 | FF26H |
| 53 | HAND<br>Fault<br>ccod<br>SW code Error | 0035H | Software error | 5 | 6100H |
| 54 | HAND<br>Fault<br>cE1<br>Modbus CMD err | 0036H | Illegal function code | 4 | 7500H |
| 55 | HAND<br>Fault<br>cE2<br>Modbus ADDR err | 0037H | Illegal data address (00H to 254H) | 4 | 7500H |
| 56 | HAND<br>Fault<br>cE3<br>Modbus DATA err | 0038H | Illegal data value | 4 | 7500H |
| 57 | HAND<br>Fault<br>cE4<br>Modbus slave FLT | 0039H | Data is written to read-only address | 4 | 7500H |
| 58 | HAND<br>Fault<br>cE10<br>Modbus time out | 003AH | Modbus transmission timeout. | 5 | 7500H |
| 59 | HAND<br>Fault<br>cP10<br>Keypad time out | 003BH | Keypad transmission timeout. | 4 | 7500H |
| 60 | HAND<br>Fault<br>bF<br>Braking fault | 003CH | Brake resistor fault | 4 | 7110H |
| 61 | HAND<br>Fault<br>ydc<br>Y-delta connect | 003DH | Motor Y-Δ switch error | 2 | 3330H |
| 62 | HAND<br>Fault<br>dEb<br>Dec. Energy back | 003EH | Energy regeneration when decelerating | 2 | FF27H |

| ID No. | Display | Fault code | Description | CANopen fault register (bit 0~7) | CANopen fault code |
|---|---|---|---|---|---|
| 63 | HAND<br>Fault<br>oSL<br>Over slip Error | 003FH | Over slip error. Slip exceeds Pr.05.26 limit and slip duration exceeds Pr.05.27 setting. | 7 | FF28H |
| 64 | HAND<br>Fault<br>ryF<br>MC Fault | 0040H | Electric valve switch error when executing Soft Start. | 5 | 7110H |
| 72 | HAND<br>Fault<br>STL1<br>STO Loss 1 | 0048H | S1~DCM internal hardware detect error | 5 | 5441H |
| 73 | HAND<br>Fault<br>S1<br>S1-Emergy stop | 0049H | External safety emergency stop | 5 | FF2AH |
| 74 | HAND<br>Fault<br>Fi re<br>On Fire | 004AH | Fire mode | 7 | FF2FH |
| 76 | HAND<br>Fault<br>STo<br>STO | 004CH | Safe torque off function active | 5 | 7110H |
| 77 | HAND<br>Fault<br>STL2<br>STO Loss 2 | 004DH | S2~DCM internal hardware detect error. | 5 | 5440H |
| 78 | HAND<br>Fault<br>STL3<br>STO Loss 3 | 004EH | S1~DCM & S2~DCM internal hardware detect error. | 5 | 5442H |
| 79 | HAND<br>Fault<br>Uoc<br>U phase oc | 004FH | U-phase short circuit | 1 | FF2BH |
| 80 | HAND<br>Fault<br>Voc<br>V phase oc | 0050H | V-phase short circuit | 1 | FF2CH |
| 81 | HAND<br>Fault<br>Woc<br>W phase oc | 0051H | W-phase short circuit | 1 | FF2DH |

| ID No. | Display | Fault code | Description | CANopen fault register (bit 0~7) | CANopen fault code |
|---|---|---|---|---|---|
| 82 | HAND<br>Fault<br>OPHL<br>U phase lacked | 0052H | U phase output phase loss | 2 | 2331H |
| 83 | HAND<br>Fault<br>OPHL<br>U phase lacked | 0053H | V phase output phase loss | 2 | 2332H |
| 84 | HAND<br>Fault<br>OPHL<br>U phase lacked | 0054H | W phase output phase loss | 2 | 2333H |
| 90 | HAND<br>Fault<br>Fstp<br>For ce Stop | 005AH | Internal PLC forced to stop<br>Verify the setting of Pr.00-32 | 7 | FF2EH |
| 99 | HAND<br>Fault<br>TRAP<br>CPU Trap Error | 0063H | CPU trap error | 7 | 6000H |
| 101 | HAND<br>Fault<br>CGdE<br>Guarding T-out | 0065H | Guarding time-out 1 | 4 | 8130H |
| 102 | HAND<br>Fault<br>CHbE<br>Heartbeat T-out | 0066H | Heartbeat time-out | 4 | 8130H |
| 103 | HAND<br>Fault<br>CSyE<br>SYNC T-out | 0067H | CAN synchrony error | 4 | 8700H |
| 104 | HAND<br>Fault<br>CbFE<br>CAN/S bus off | 0068H | CAN bus off | 4 | 8140H |
| 105 | HAND<br>Fault<br>CIdE<br>CAN/S Idx exceed | 0069H | Can index exceed | 4 | 8110H |
| 106 | HAND<br>Fault<br>CAdE<br>CAN/S add. set | 006AH | CAN address error | 4 | 0x8100 |

| ID No. | Display | Fault code | Description | CANopen fault register (bit 0~7) | CANopen fault code |
|---|---|---|---|---|---|
| 107 | 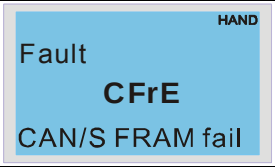 | 006BH | CAN frame fail | 4 | 0x8100 |
| 111 | 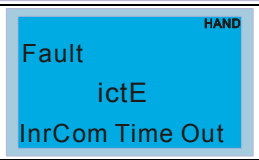 | 006FH | Internal communication error | 4 | 7500H |

# 15-6 CANopen LED Function

There are two CANopen flash signs: RUN and ERR.

RUN LED:

| LED status | Condition | CANopen State |
|---|---|---|
| OFF | | Initial |
| Blinking | 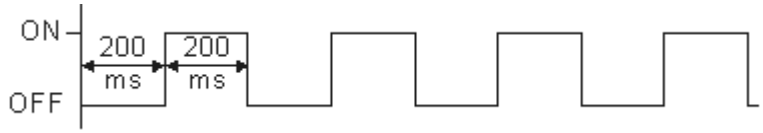 | Pre-Operation |
| Single flash | 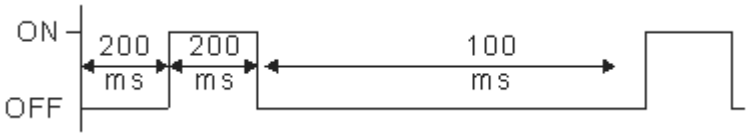 | Stopped |
| ON | | Operation |

ERR LED:

| LED status | Condition/ State |
|---|---|
| OFF | No Error |
| Single flash | One Message fail<br> 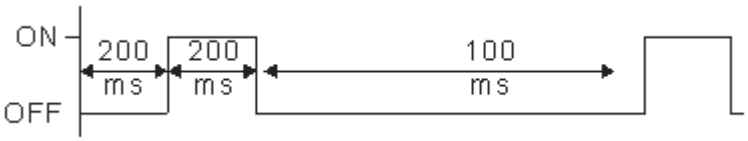 |
| Double flash | Guarding fail or heartbeat fail<br> 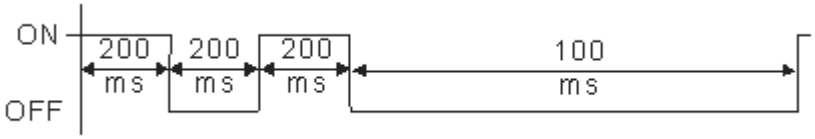 |
| Triple flash | SYNC fail<br> 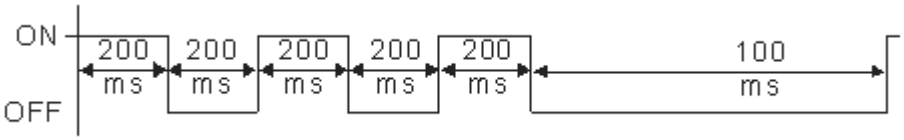 |
| ON | Bus off |

[ This page intentionally left blank ]

# *Chapter 16 PLC Function Applications*

16-1 PLC Summary

16-2 Notes before PLC use

16-3 Turn on

16-4 Basic principles of PLC ladder diagrams

16-5 Various PLC device functions

16-6 Introduction to the Command Window

16-7 Error display and handling

16-8 CANopen Master control applications

16-9 Explanation of various PLC speed mode controls

16-10 Internal communications main node control

16-11 Modbus remote IO control applications (use MODRW)

16-12 Calendar functions

# 16-1 PLC Summary

## 16-1-1 Introduction

The commands provided by the CP2000's built-in PLC functions, including the ladder diagram editing tool WPLSoft, as well as the usage of basic commands and applications commands, chiefly retain the operating methods of Delta's PLC DVP series.

## 16-1-2 WPLSoft ladder diagram editing tool

WPLSoft is Delta's program editing software for the DVP and CP2000 programmable controllers in the Windows operating system environment. Apart from general PLC program design general Windows editing functions (such as cut, paste, copy, multiple windows, etc.), WPLSoft also provides many Chinese/English annotation editing and other convenience functions (such as registry editing, settings, file reading, saving, and contact graphic monitoring and settings, etc.).

The following basic requirements that need to install WPLSoft editing software:

| Item | System requirements |
|---|---|
| Operating system | Windows 95/98/2000/NT/ME/XP |
| CPU | At least Pentium 90 |
| Memory | At least 16MB (we recommend at least 32MB) |
| Hard drive | Hard drive capacity: at least 100MB free space<br>One optical drive (for use in installing this software) |
| Display | Resolution: 640×480, at least 16 colors; it is recommended that the screen area be set at 800×600 pixels |
| Mouse | Ordinary mouse or Windows-compatible device |
| Printer | Printer with a Windows driver program |
| RS-485 port | Must have at least an RS-485 port to link to the PLC |

# 16-2 Notes before PLC use

1. The PLC has a preset communications format of 7,N,2,9600, with node 2; the PLC node can be changed in parameter 09-35, but this address may not be the same as the converter's address setting of 09-00.
2. The CP2000 provides 2 communications serial ports that can be used to download PLC programs (see figure below). Channel 1 has a fixed communications format of 19200,8,N,2 RTU.

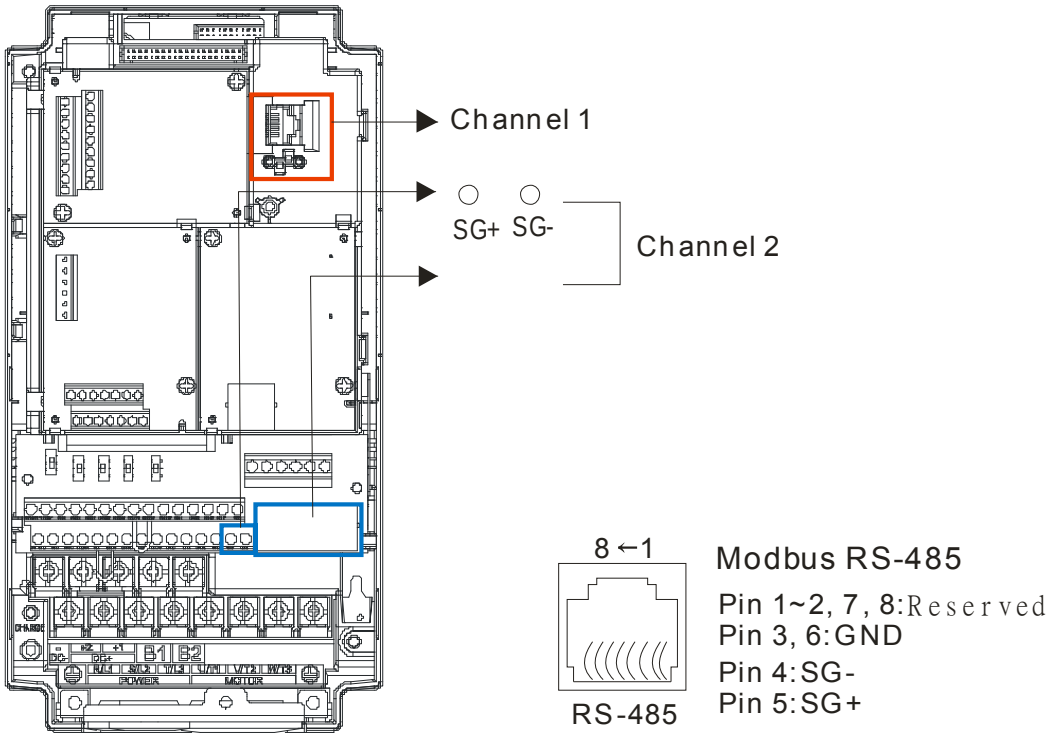


3. The client can simultaneously access data from the converter and internal PLC, which is performed through identification of the node. For instance, if the converter node is 1 and the internal PLC node is 2, then the client command will be
   01 (node) 03 (read) 0400 (address) 0001 (1 data item), indicating that it must read the data in converter parameter 04-00
   02 (node) 03 (read) 0400 (address) 0001 (1 data item), indicating that it must read the data in internal PLC X0
4. The PLC program will be disabled when uploading/downloading programs.
5. Please note when using WPR commands to write in parameters, values may be modified up to a maximum of $10^9$ times, otherwise a memory write error will occur. The calculation of modifications is based on whether the entered value has been changed. If the entered value is left unchanged, the modifications will not increase afterwards. But if the entered value is different from before, the number of modifications will increase by one. Those parameters in the table below are exceptions, please proceed to the next page for details:

| | CP2000 |
|---|---|
| Pr00-10, Control mode | ----- |
| Pr00-11, Velocity mode; | Yes |
| Pr00-12, P2P mode | ----- |
| Pr00-13, Torque mode | ----- |
| Pr01-12~P01-19, 1st ~ 4th Acc/Dec time; | Yes |
| Pr02-12, MULTI-Input ACT; | Yes |
| Pr02-18,MULTI-Output ACT | Yes |
| Pr04-50~Pr04-59 PLC buffer 1~10; | Yes |
| Pr08-04,Up Limit for I | Yes |
| Pr08-05,PID Out-Limit %; | Yes |
| Pr10-17, Electrical Gear A | ----- |

6. When parameter 00-04 is set as 28, the displayed value will be the value of PLC register D1043 (see figure below):

| Digital Keypad KPC-CC01<br>Can display 0~65535 | Digital Keypad KPC-CE01<br>0~9999 |
|---|---|
| 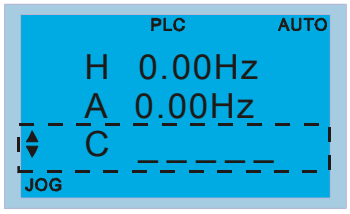 | <br>When more than 9999<br> |

7. In the PLC Run and PLC Stop mode, the content 9 and 10 of parameter 00-02 cannot be set and cannot be reset to the default value.
8. The PLC can be reset to the default value when parameter 00-02 is set as 6.
9. The corresponding MI function will be disabled when the PLC writes to input contact X.
10. When the PLC controls converter operation, control commands will be entirely controlled by the PLC and will not be affected by the setting of parameter 00-21.
11. When the PLC controls converter frequency commands (FREQ commands), frequency commands will be entirely controlled by the PLC, and will not be affected by the setting of parameter 00-20 or the Hand ON/OFF configuration.
12. When the PLC controls converter frequency (TORQ commands), torque commands will be entirely controlled by the PLC, and will not be affected by the setting of parameter 11-33 or the Hand ON/OFF configuration.
13. When the PLC controls converter frequency (POS commands), position commands will be entirely controlled by the PLC, and will not be affected by the setting of parameter 11-40 or the Hand ON/OFF configuration.
14. When the PLC controls converter operation, if the keypad Stop setting is valid, this will trigger an FStP error and cause stoppage.

# 16-3 Turn on

## 16-3-1 Connect to PC

Start operation of PLC functions in accordance with the following four steps

1. After pressing the Menu key and selecting 4: PLC Function on the KPC-CC01 digital keypad, press the Enter key (see figure below).

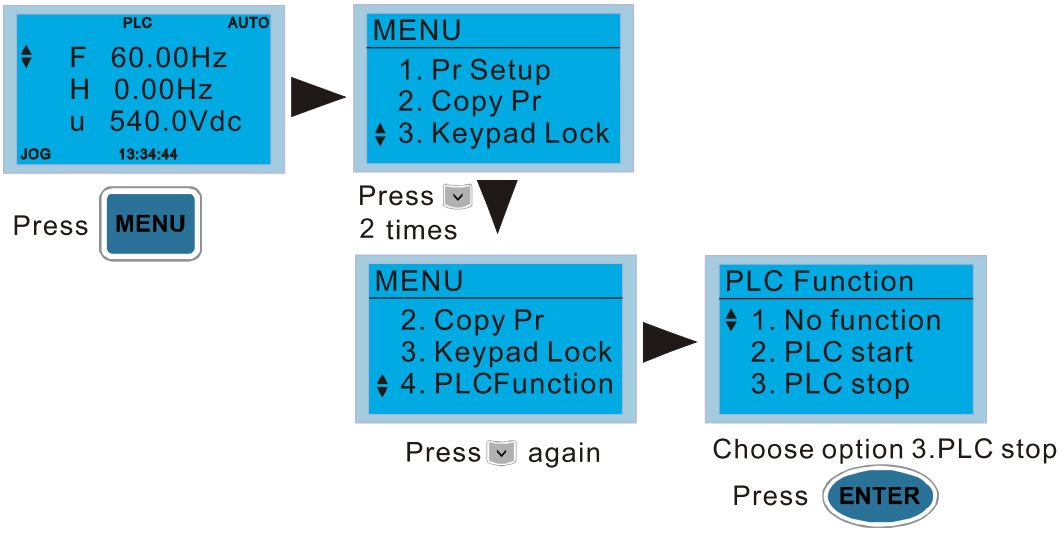


**NOTE**

If the optional KPC-CE01 digital keypad is used, employ the following method:

Switch to the main PLC2 screen: After powering up the drivers, press the MENU key on the KPC-CE01 once to switch to the function screen, which will then display "PrSET." After using the up or down button to switch to the "PLC" screen, and then press ENTER to enter PLC function settings. Afterwards, press the Up key to switch to "PLC2," and then press ENTER. The screen will now display "PLSn" and flash, indicating that the internal PLC currently has no program, and this error message can be ignored. If the PLC has an editing program, the screen will display "End," and will jump back to "PLC2" after 1 to 2 seconds. When no program has been downloaded to the drivers, the program can continue to run even if a PLC warning message appears.

2. Wiring: Connect the driver's RJ-45 communications interface to a PC via the RS485

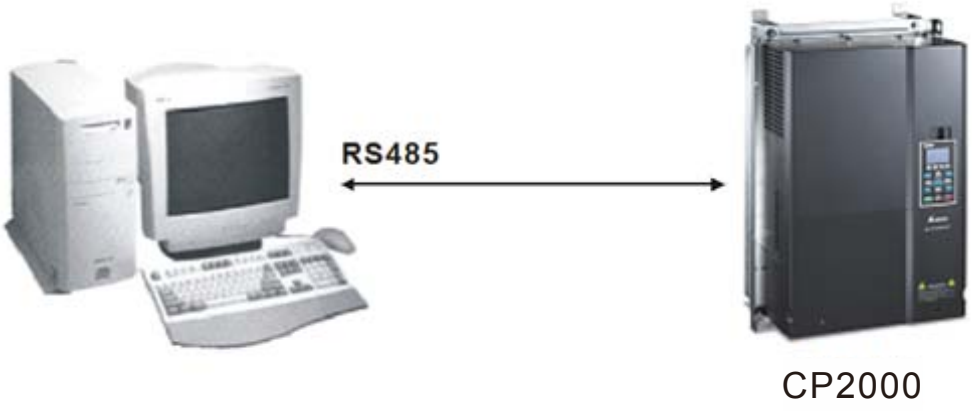


3. PLC function usage

| | |
|---|---|
| PLC<br>1.Disable<br>2.PLC Run<br>3.PLC Stop | ■ PLC functions are as shown in the figure on the left; select item 2 and implement PLC functions.<br>1: No function (Disable)<br>2: Enable PLC (PLC Run)<br>3: Stop PLC functions (PLC Stop) |
| Optional product: PLC function display method on KPC-CE01 digital keypad | PLC 0 : Do not implement PLC functions<br>PLC 1 : Initiate PLC Run<br>PLC 2 : Initiate PLC Stop |

■ When the external multifunctional input terminals (MI1 to MI8) are in PLC Mode select bit0 (51) or PLC Mode select bit1 (52), and the terminal contact is closed or open, it will compulsorily switch to the PLC mode, and keypad switching will be ineffective. Corresponding actions are as follows:

| PLC mode | | PLC Mode select bit1(52) | PLC Mode select bit0 (51) |
|---|---|---|---|
| Using KPC-CC01 | Using KPC-CE01 | | |
| Disable | PLC 0 | OFF | OFF |
| PLC Run | PLC 1 | OFF | ON |
| PLC Stop | PLC 2 | ON | OFF |
| Maintain previous state | Maintain previous state | ON | ON |

Use of KPC-CE01 digital keypad to implement PLC functions

☑ When the PLC screen switches to the PLC1 screen, this will trigger one PLC action, and the PLC program start/stop can be controlled by communications via the WPL.

☑ When the PLC screen switches to the PLC2 screen, this will trigger one PLC stop, and the PLC program start/stop can be controlled by communications via the WPL.

☑ The external terminal control method is the same as shown in the table above.

**NOTE**

■ When input/output terminals (FWD REV MI1 to MI8 MI10 to 15, Relay1~3RY10 to RY15, MO10 to MO11,) are included in the PLC program, these input/output terminals will only be used by the PLC. As an example, when the PLC program controls Y0 during PLC operation (PLC1 or PLC2), the corresponding output terminal relay(RA/RB/RC) will operate in

accordance with the program. At this time, the multifunctional input/output terminal setting will be ineffective. Because these terminal functions are already being used by the PLC, the DI DO AO in use by the PLC can be determined by looking at parameter 02-52, 02-53, and 03-30.

- When the PLC's procedures use special register D1040, the corresponding AO contact AFM1 will be occupied, and AFM2 corresponding to special register D1045 will have the same situation.
- Parameter 03-30 monitors the state of action of the PLC function analog output terminal; Bit0 corresponds to the AFM1 action state, and Bit1 corresponds to the AFM2 action state.

## 16-3-2 I/O device explanation

### Input devices:

| Serial No. | X0 | X1 | X2 | X3 | X4 | X5 | X6 | X7 | X10 | X11 | X12 | X13 | X14 | X15 | X16 | X17 |
|---|---|---|---|---|---|---|---|---|---|---|---|---|---|---|---|---|
| **1** | FWD | REV | MI1 | MI2 | MI3 | MI4 | MI5 | MI6 | MI7 | MI8 | | | | | | |
| **2** | | | | | | | | | | | MI10 | MI11 | MI12 | MI13 | MI14 | MI15 |
| **3** | | | | | | | | | | | MI10 | MI11 | MI12 | MI13 | | |

1: Control I/O |

2: Expansion card EMC-D611A (D1022=4)

3: Expansion card EMC-D42A (D1022=5)

### Output devices:

| Serial No. | Y0 | Y1 | Y2 | Y3 | Y4 | Y5 | Y6 | Y7 | Y10 | Y11 | Y12 | Y13 | Y14 | Y15 | Y16 | Y17 |
|---|---|---|---|---|---|---|---|---|---|---|---|---|---|---|---|---|
| **1** | RY1 | RY2 | RY3 | | | | | | | | | | | | | |
| **2** | | | | | | MO10 | MO11 | | | | | | | | | |
| **3** | | | | | | RY10 | RY11 | RY12 | RY13 | RY14 | RY15 | | | | | |

1: Control I/O |

2: Expansion card EMC-D42A (D1022=5)

3: Expansion card EMC-R6AA (D1022=6)

## 16-3-3 Installation WPLSoft

See Delta's website for WPLSoft editing software:

http://www.delta.com.tw/product/em/download/download_main.asp?act=3&pid=3&cid=1&tpid=3

## 16-3-4 Program writing

After completing installation, the WPLSoft program will be installed in the designated subfolder "C:\Program Files\Delta Industrial Automation\WPLSoft x.xx." The editing software can now be run by clicking on the WPL icon using the mouse.

The WPL editing window will appear after 3 seconds (see figure below). When running WPLSoft for the first time, before "New file" has been used, only the "File (F)," "Communications (C)," View (V)," "Options (O)," and "Help (H)" columns will appear on the function toolbar.

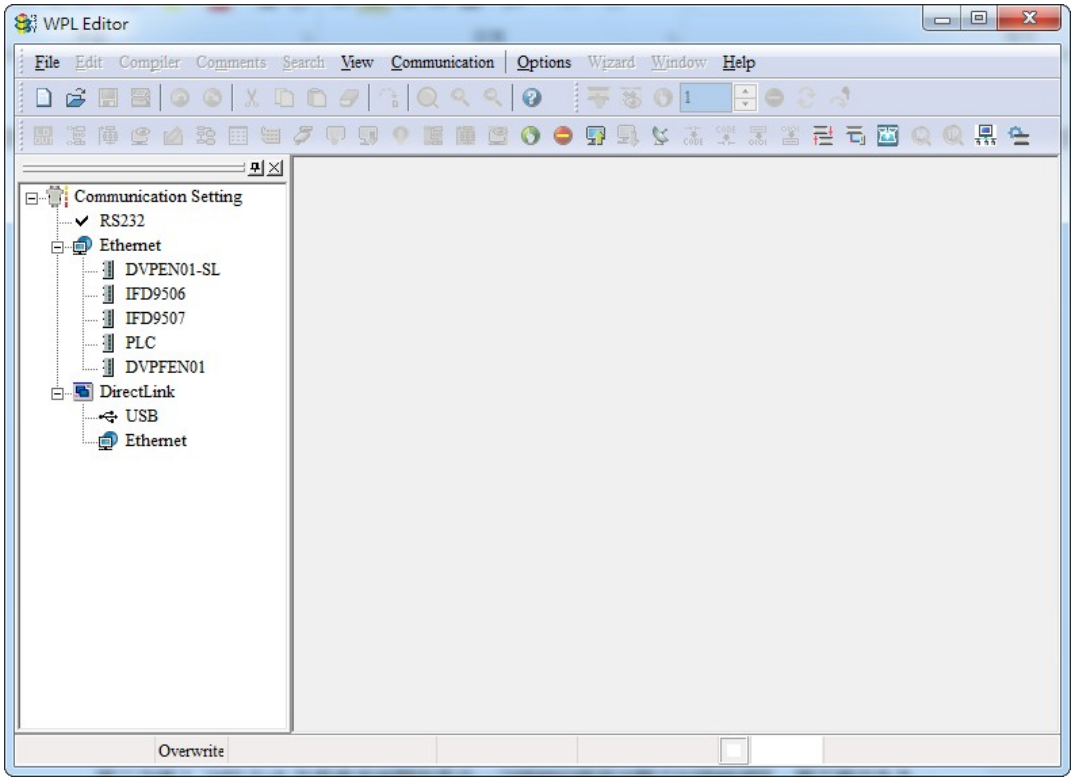


After running WPLSoft for the second time, the last file edited will open and be displayed in the editing window. The following figure provides an explanation of the WPLSoft editing software window:

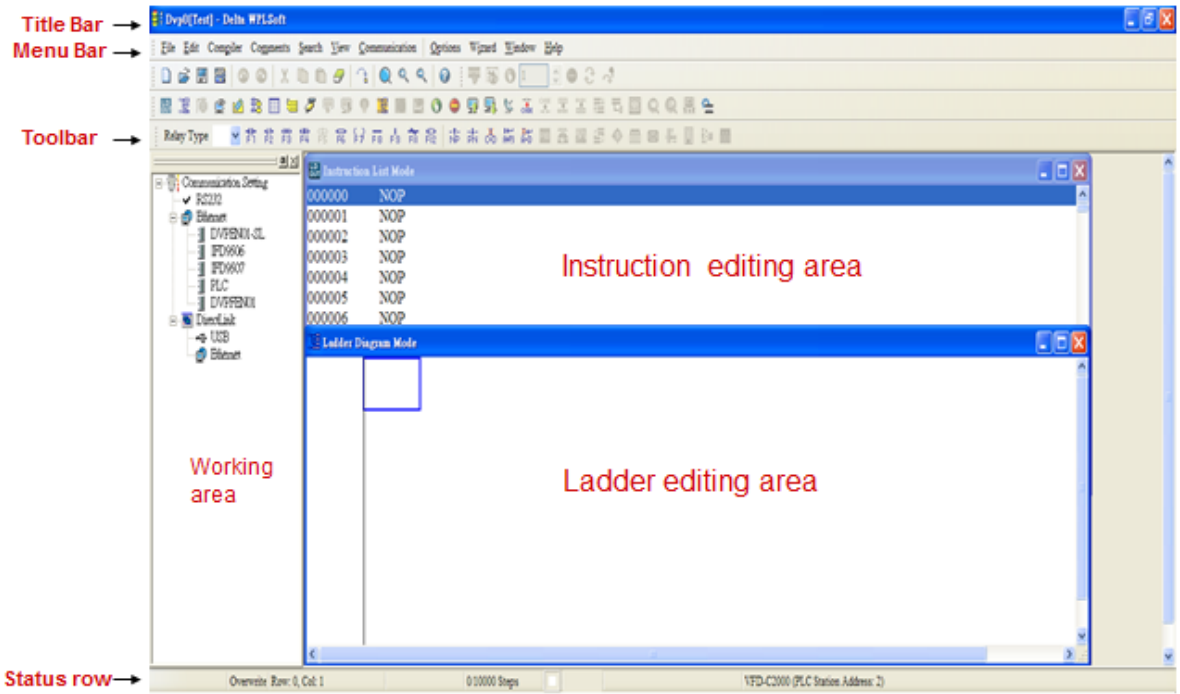

Click on the icon on the toolbar in the upper left part of the screen: opens new file (Ctrl+N)

You can also use "File (F)"=> New file (N) (Ctrl+N)

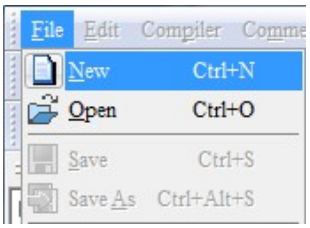


The "Device settings" window will appear after clicking. You can now enter the project title and filename, and select the device and communication settings to be used

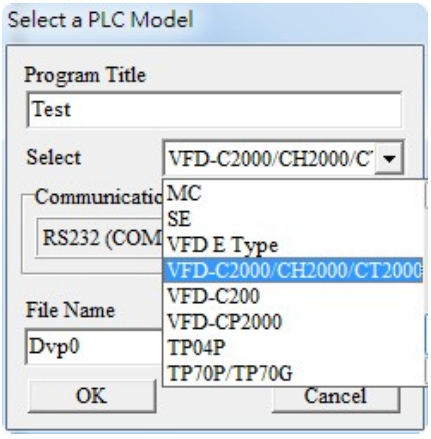

Communications settings: Perform settings in accordance with the desired communications method

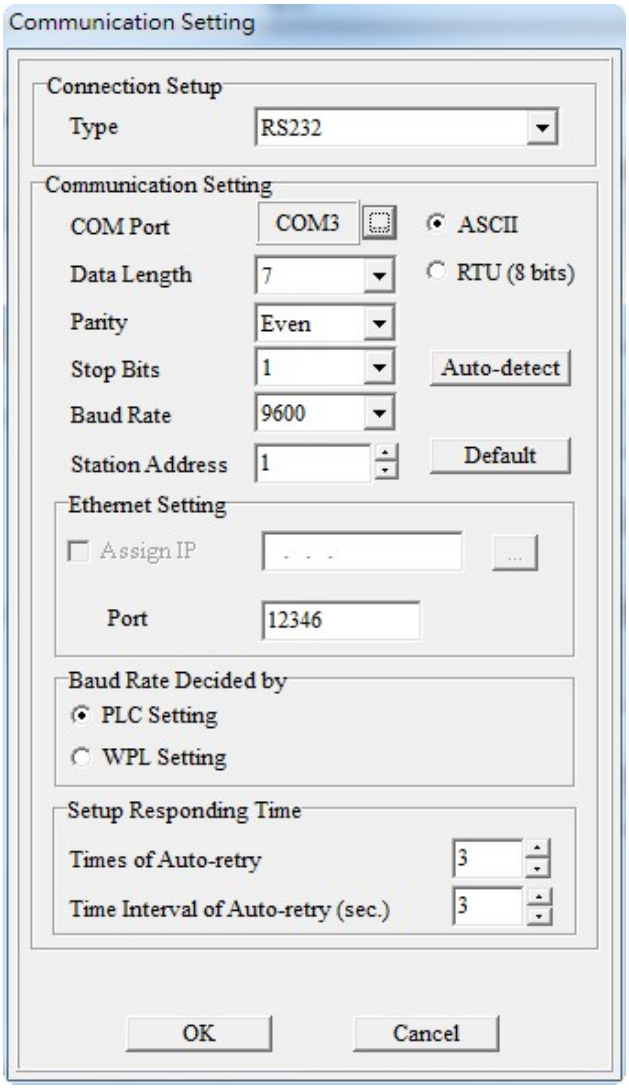


Press Confirm after completing settings and begin program editing. There are two program editing methods; you can choose whether to perform editing in the command mode or the ladder diagram mode.

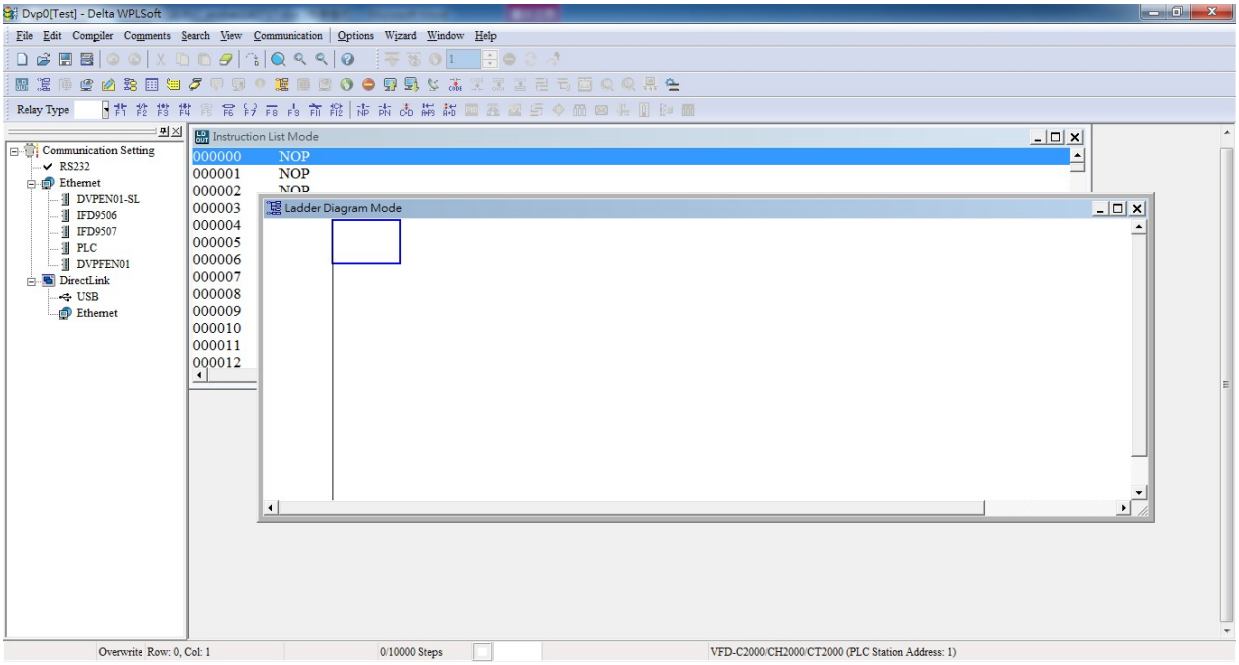

In ladder diagram mode, you can perform program editing using the buttons on the function icon row

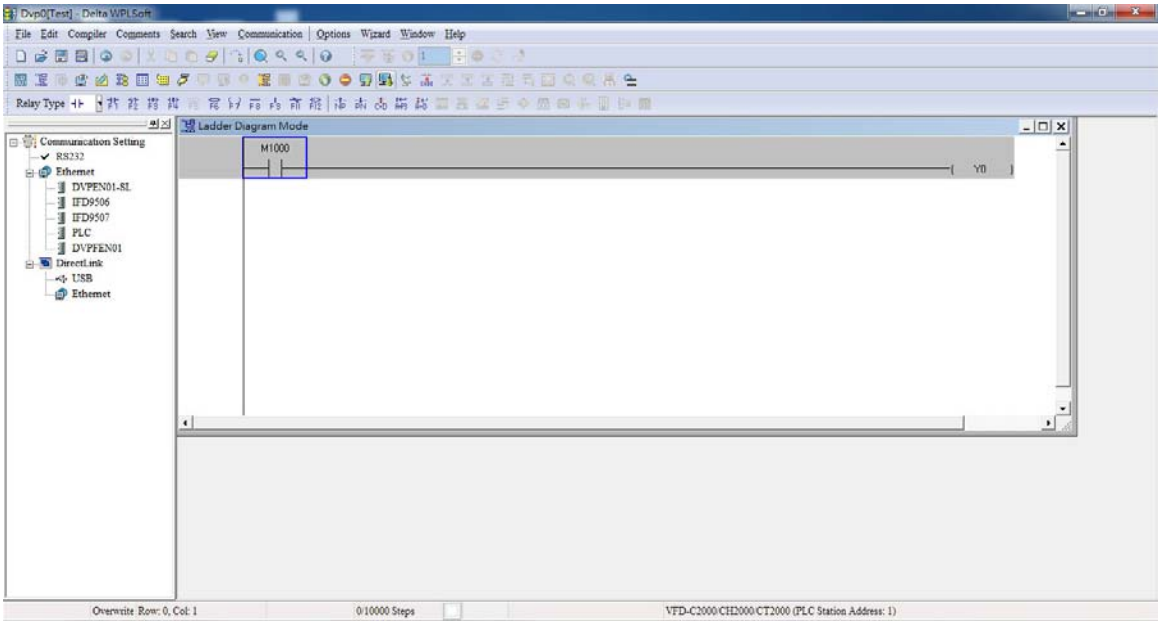


## Basic Operation

Example: Input the ladder diagram in the following figure

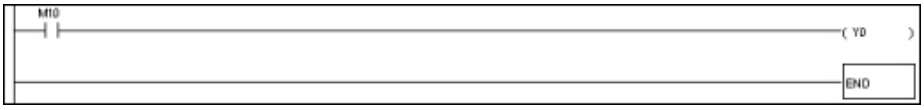


Mouse operation and keyboard function key (F1 to F12) operation

1. The following screen will appear after a new file has been established:

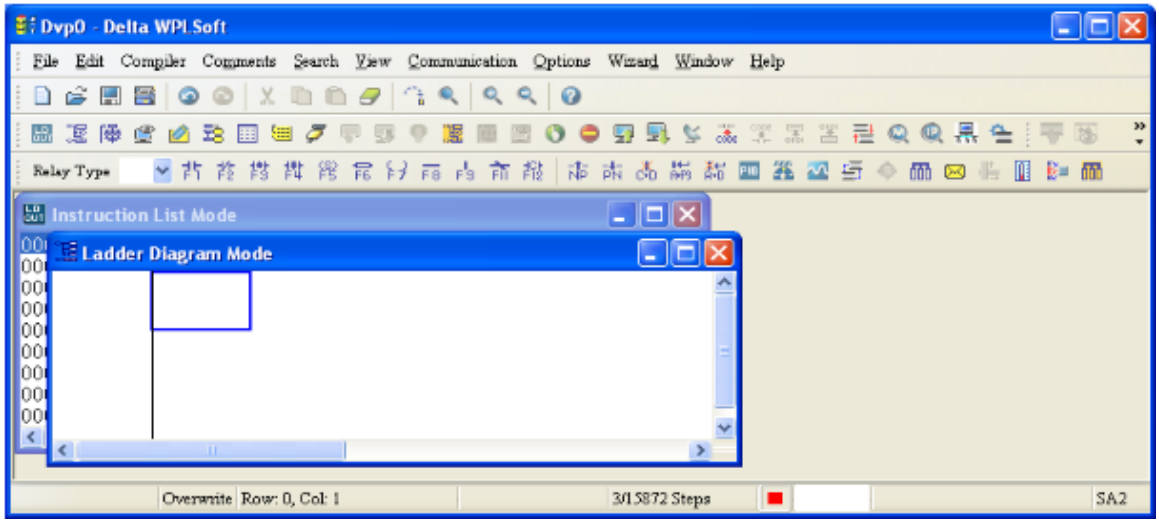

2. Use the mouse to click on the always-open switch icon or press the function key F1:

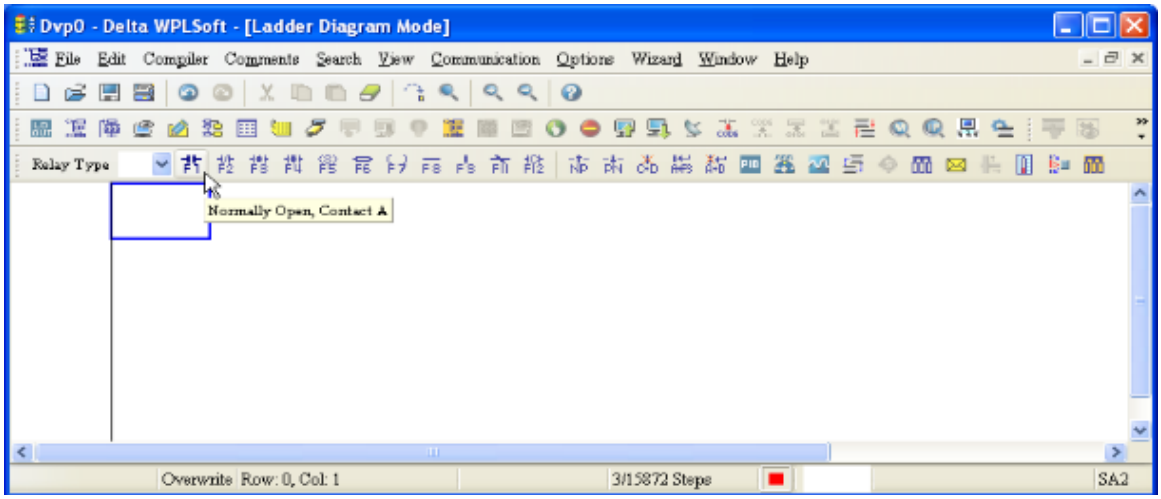


3. After the name of the input device and the comment dialog box have appeared, the device name (such as "M"), device number (such as "10"), and input comments (such as "auxiliary contact") can be selected; press the Confirm button when finished.

4. Click on the output coil icon or press function key F7. After the name of the input device and the comment dialog box have appeared, the device name (such as "Y"), device number (such as "0"), and input comments (such as "output coil") can be selected; press the Confirm button when finished.

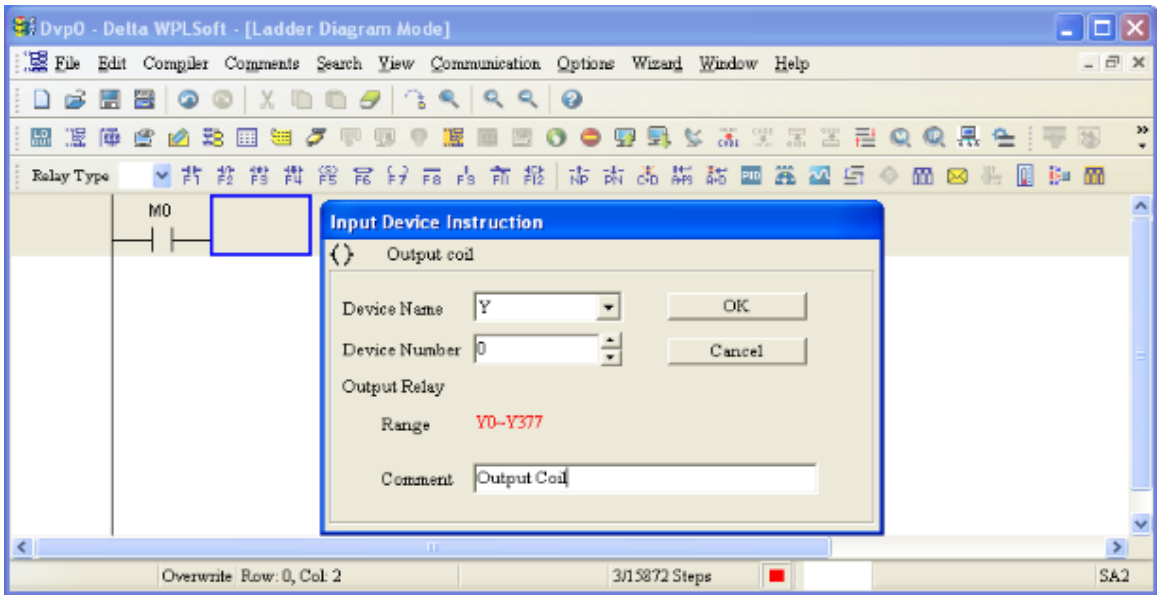

5. Click on application command icon F6 or press function key F6. Click on "All application commands" in the function classification field, and click on the End command in the application command pull-down menu, or use the keyboard to key in "End" in that field, and press the confirm button.

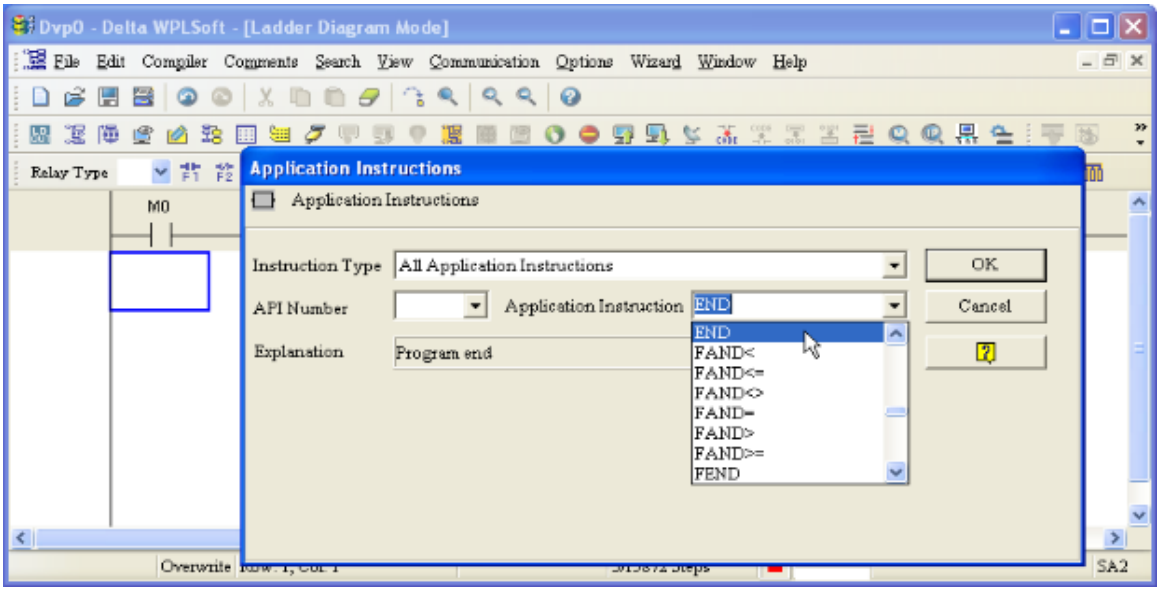


6. Click on the CODE icon, which will compile the edited ladder diagram as a command program. After compiling, the number of steps will appear on the left side of the busbar.

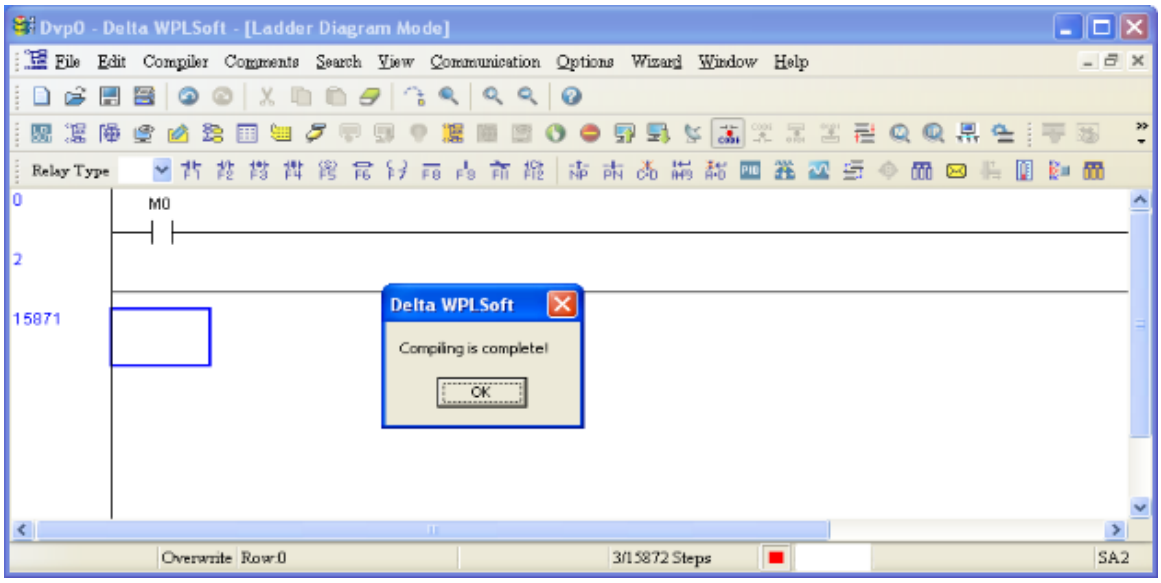

## 16-3-5 Program download

After inputting a program using WPLSoft, select compile . After completing compilation, select the to download a program. WPLSoft will perform program download with the online PLC in the communications format specified in communications settings.

## 16-3-6 Program monitoring

While confirming that the PLC is in the Run mode, after downloading a program, click on in the communications menu and select start ladder diagram control (see figure below)

# 16-4 Basic principles of PLC ladder diagrams

## 16-4-1 Schematic diagram of PLC ladder diagram program scanning

Output results are calculated on the basis of the ladder diagram configuration (internal devices will have real-time output before results are sent to an external output point)

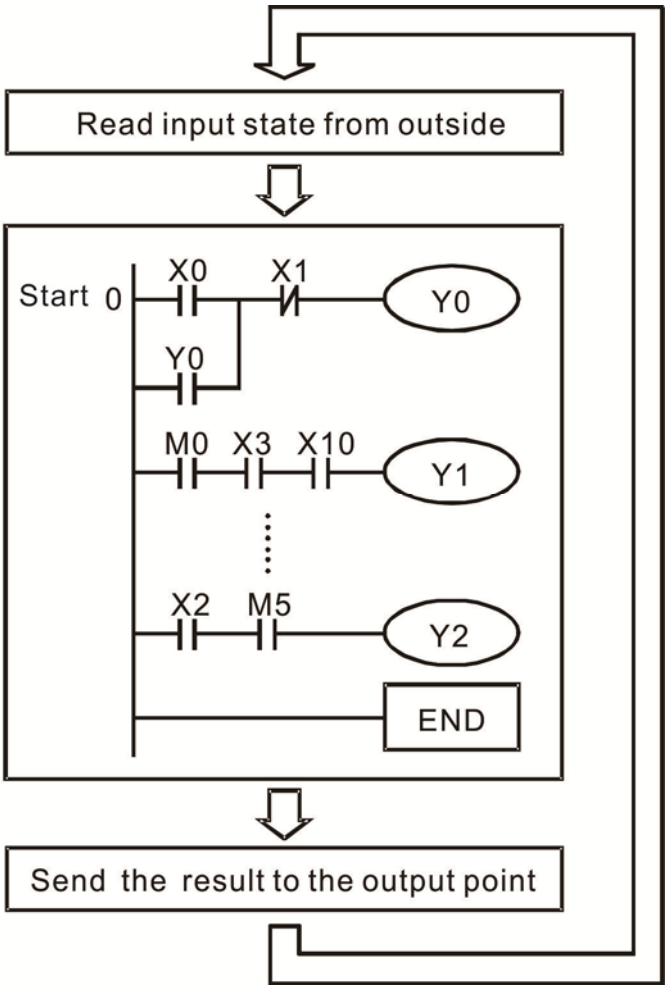


Repeated implementation

## 16-4-2 Introduction to ladder diagrams

Ladder diagrams comprise a graphic language widely applied in automatic control, and employs common electrical control circuit symbols. After a ladder diagram editor has been used to create a ladder pattern, PLC program designed is completed. The use of a graphic format to control processes is very intuitive, and is readily accepted by personnel who are familiar with electrical control circuit technology. Many of the basic symbols and actions in a ladder diagram comprise commonly-seen electrical devices in conventional automatic control power distribution panels, such as buttons, switches, relays, timers, and counters.

Internal PLC devices: The types and quantities of internal PLC devices vary in different brands of products. Although these internal devices use the same names as conventional electrical control circuit elements such as relays, coils, and contacts, a PLC does not actually contain these physical devices, and they instead correspond to basic elements in the PLC's internal memory (bits). For instance, if a bit is 1, this may indicate that a coil is electrified, and if that bit is 0, it will indicate that the coil is not electrified. An NO contact (Normal Open, or contact a) can be used to directly read the value of the corresponding bit, and an NC contact (Normal Close, or contact b) can

be used to obtain the inverse of the bit's value. Multiple relays occupy multiple bits, and 8 bits comprise one byte; two bytes comprise one word, and two words comprise a double word. When multiple relays are processing at the same time (such as addition/subtraction or displacement, etc.), a byte, word, or double word can be used. Furthermore, a PLC contains two types of internal devices: a timer and a counter. It not only has a coil, but can count time and numerical values. Because of this, when it is necessary to process some numerical values, these values are usually in the form of bytes, words, or double words.

The various internal devices in a PLC all account for a certain quantity of storage units in the PLC's storage area. When these devices are used, the content of the corresponding storage area is red in the form of bits, bytes, or words.

Introduction to the basic internal devices in a PLC

| Device type | Description of Function |
|---|---|
| Input Relay | An input relay constitutes the basic unit of storage in a PLC's internal memory corresponding to an external input point (which serves as a terminal connecting with an external input switch and receiving external input signals). It is driven by external input signals, to which it assigns values of 0 or 1. A program design method cannot change the input relay status, and therefore cannot rewrite the corresponding basic units of an input relay, and WPLSoft cannot be used to perform compulsory On/Off actions. A relay's contacts (contacts a and b) can be used an unlimited number of times. An input relay with no input signal must be left idle and cannot be used for some other purpose.<br>☑ Device indicated as: X0, X1, X7, X10, X11, etc. This device is expressed with the symbol "X," and a device's order is indicated with an octal number. Input point numbers are indicated in Page 16-8. I/O devices explanation. |
| Output Relay | An output relay constitutes the basic unit of storage in a PLC's internal memory corresponding to an external output point (which connects with an external load). It may be driven by an input relay contact, a contact on another internal device, or its own contacts. It uses one NO contact to connect with external loads or other contacts, and, like input contacts, can use the contact an unlimited number of times. An output relay with no input signal will be idle, but may be used an internal relay if needed.<br>☑ Device indicated as: Y0, Y1, Y7, Y10, Y11, etc. This device is expressed with the symbol "Y," and a device's order is indicated with an octal number. Output point numbers are indicated in Page 16-8. I/O devices explanation. |
| Internal Relay | Internal relays have no direct connection with the outside. These relays are auxiliary relays inside a PLC. Their function is the same as that of an auxiliary (central) relay in an electrical control circuit: Each auxiliary relay corresponding to a basic unit of internal storage; they can be driven by input relay contacts, output relay contacts, and the contacts of other internal devices. An internal auxiliary relay's contact can also be used an unlimited number of times. Internal relays have no outputs to outside, and must output via an output point.<br>☑ Device indicated as: M0, M1 to M799, etc. This device is expressed as the symbol "M," expressed, and its order is expressed as a decimal number. |
| Counter | A counter is used to perform counting operations. A count setting value (such as the number of pulses to be counted) must be assigned when a counter is used. A counter contains a coil, contact, and a counting storage device. When the coil goes from Off →to On, this indicates that the counter has an input pulse, and one is added to its count. There are 16 bits that can be employed by the user.<br>☑ Device indicated as: C0, C1 to C79, etc. This device is expressed as the symbol "C," expressed, and its order is expressed as a decimal number. |

| Device type | Description of Function |
|---|---|
| Timer | A timer is used to complete control of timing. The timer contains a coil, contact, and a time value register. When the coil is electrified, if the preset time is reached, the contact will be actuated (contact a will close, contact b will open), and the timer's fixed value be given by the set value. Timer has a regulated clock cycle (timing units: 100 ms). As soon as power to the coil is cut off, the contact will no longer be actuated (contact a will open, contact b will close), and the original timing value will return to zero.<br>☑ Device indicated as: T0, T1 to T159, etc. The device is expressed as the symbol "T," and its order is expressed as a decimal number. |
| Data register | When a PLC is used to perform various types of sequence control and set time value and count value control, it most commonly perform data processing and numerical operations, and data registers are used exclusively for storage of data and various parameters. Each data register contains 16 bits of binary data, which means that it can store one word. Two data registers with adjacent numbers can be used to process double words.<br>☑ Device indicated as: D0, D1 to D399, etc. The device is expressed as the symbol "D," and its order is expressed as a decimal number. |

## Ladder diagram images and their explanation

| Ladder diagram structures | Explanation of commands | Command | Using Device |
|---|---|---|---|
| 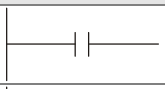 | NO switch, contact a | LD | X、Y、M、T、C |
| 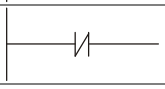 | NC switch, contact b | LDI | X、Y、M、T、C |
| 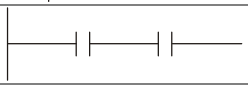 | Series NO | AND | X、Y、M、T、C |
| 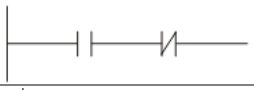 | Series NC | ANI | X、Y、M、T、C |
| 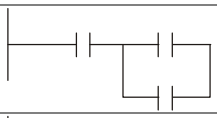 | Parallel NO | OR | X、Y、M、T、C |
| 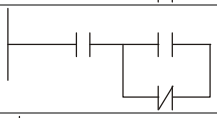 | Parallel NC | ORI | X、Y、M、T、C |
| 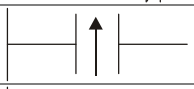 | Positive edge-triggered switch | LDP | X、Y、M、T、C |
| 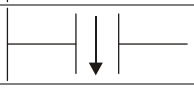 | Negative edge-triggered switch | LDF | X、Y、M、T、C |
| 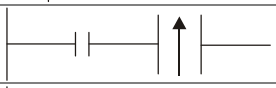 | Positive edge-triggered series | ANDP | X、Y、M、T、C |
| 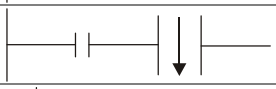 | Negative edge-triggered series | ANDF | X、Y、M、T、C |
| 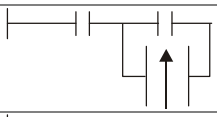 | Positive edge-triggered parallel | ORP | X、Y、M、T、C |
| 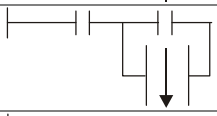 | Negative edge-triggered parallel | ORF | X、Y、M、T、C |
| 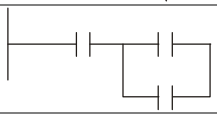 | Block series | ANB | N/A |

| Ladder diagram structures | Explanation of commands | Command | Using Device |
|---|---|---|---|
| | Block parallel | ORB | N/A |
| | Multiple outputs | MPS<br>MRD<br>MPP | N/A |
| | Coil driven output commands | OUT | Y、M |
| | Some basic commands, applications commands | Some basic commands<br>Applications commands | |
| | Inverted logic | INV | N/A |

## 16-4-3 Overview of PLC ladder diagram editing

The program editing method begins from the left busbar and proceeds to the right busbar (the right busbar is omitted when editing using WPLSoft). Continue to the next row after completing each row; there is a maximum of 11 contacts on each row. If this is not sufficient, a continuous line will be will be generated to indicate the continued connection and more devices can be added. A continuous series of numbers will be generated automatically and identical input points can be used repeatedly. See figure below:

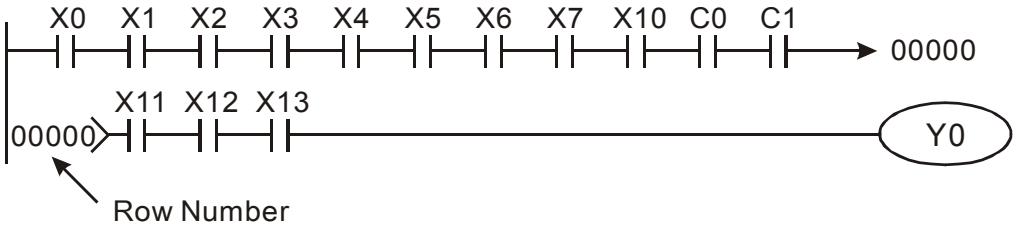


The ladder diagram programming method involves scanning from the upper left corner to the lower right corner. The coils and applications command computing box are handled in the output, and the ladder diagram is placed on the farthest right. Taking the figure below as an example, we can gradually analyze the procedural sequence of the ladder diagram. The number in the upper right corner gives the sequential order.

Explanation of command sequence

| | | |
|---|---|---|
| 1 | LD | X0 |
| 2 | OR | M0 |
| 3 | AND | X1 |
| 4 | LD | X3 |
| | AND | M1 |
| | ORB | |
| 5 | LD | Y1 |
| | AND | X4 |

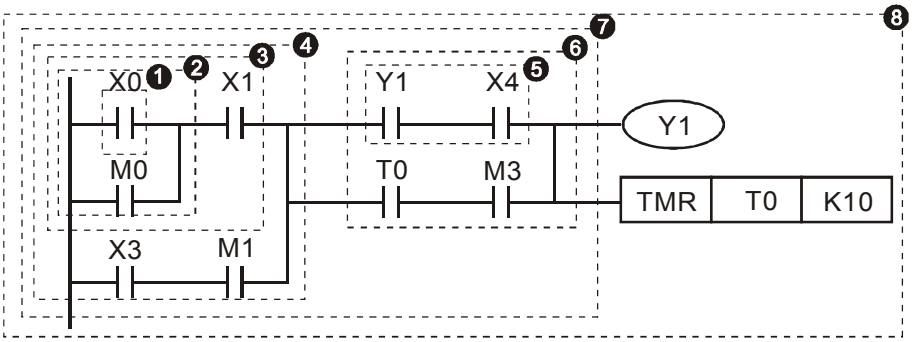

```
6    LD   T0
     AND  M3
     ORB
7    ANB
8    OUT  Y1
     TMR  T0   K10
```

Explanation of basic structure of ladder diagrams

**LD (LDI) command:** An LD or LDI command is given at the start of a block.

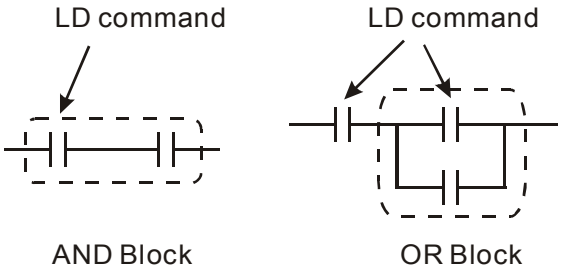


LDP and LDF have this command structure, but there are differences in their action state. LDP, LDF only act at the rising or falling edge of a conducting contact. (see figure below):

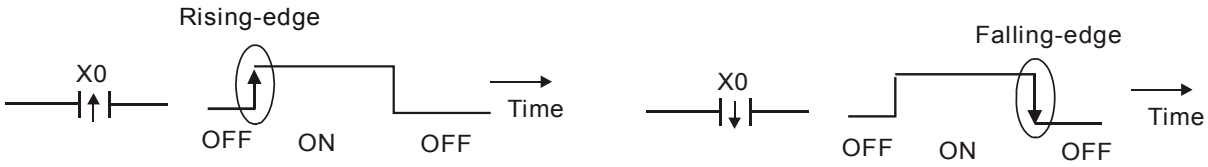


**AND (ANI) command:** A series configuration in which a single device is connected with one device or a block.

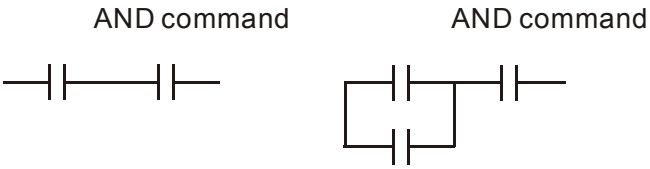


ANDP, ANDF also have structures like this, but their action occurs at the rising and falling edge.

**OR (ORI) command:** A single device is connected with one device or a block.

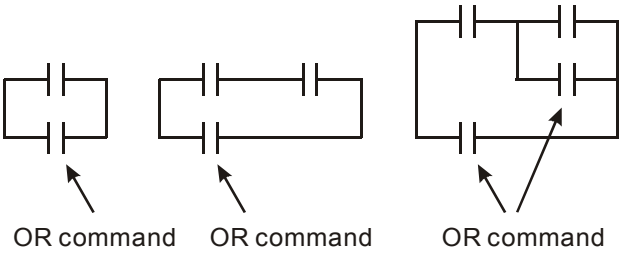


ORP, ORF also have identical structures, but their action occurs at the rising and falling edge.

**ANB command:** A configuration in which one block is in series with one device or block.

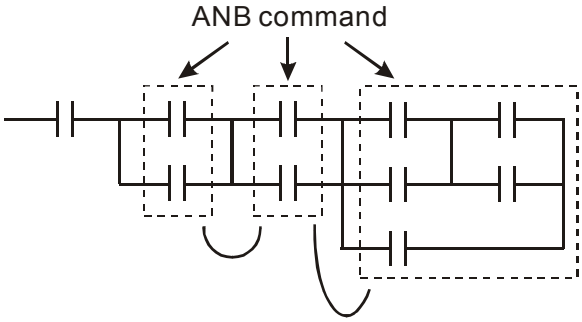


**ORB command:** A configuration in which one block is in parallel with one device or block.

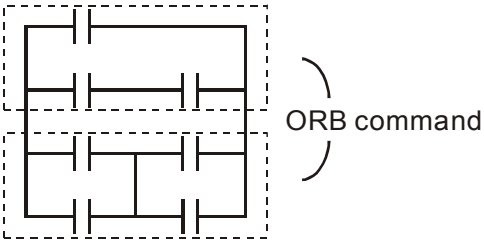


In the case of ANB and ORB operations, if a number of blocks are connected, they should be combined to form a block or network from the top down or from left to right.

**MPS, MRD, MPP commands:** Branching point memory for multiple outputs, enabling multiple, different outputs. The MPS command begins at a branching point, where the so-called branching point refers to the intersection of horizontal and vertical lines. We have to rely on the contact status along a single vertical line to determine whether the next contact can give a memory command. While each contact is basically able to give memory commands, in view of convenience and the PLC's capacity restrictions, this can be omitted from some places when converting a ladder diagram. The structure of the ladder diagram can be used to judge what kinds of contact memory commands are used.

MPS can be distinguished by use of the "┬" symbol; this command can be used consecutively for up to 8 times. The MRD command is read from branching point memory; because logic states along any one vertical line must be the same, in order to continue analysis of other ladder diagrams, the original contact status must be read.

MRD can be distinguished by use of the "├" symbol. The MPP command is read from the starting state of the uppermost branching point, and it is read from the stack (pop); because it is the final command along a vertical line, it indicates that the state of the vertical line can be concluded.
MPP can be distinguished by use of the "└" symbol. Although there should basically be no errors when using the foregoing analytical approach, the compiling program may sometimes omit identical state output, as shown in the following figure:

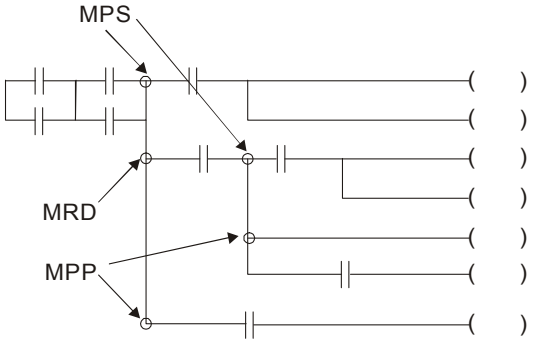

# 16-4-4 Commonly-used basic program design examples

## Start, stop, and protection

Some applications may require a brief close or brief break using the buttons to start and stop equipment. A protective circuit must therefore be designed to maintain continued operation in these situations; this protective circuit may employ one of the following methods:

Example 1: Priority stop protective circuit

When the start NO contact X1=On, and the stop NC contact X2＝Off, Y1=On; if X2=On at this time, coil Y1 will no longer be electrified, and this is therefore referred to as priority stop.

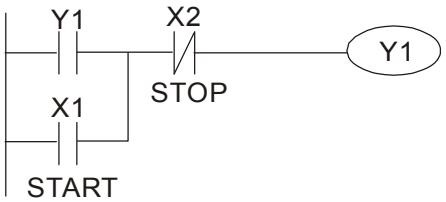


Example 2: Priority start protective circuit

When start NO contact X1=On, and the stop NC contact X2＝Off, Y1=On, and coil Y1 will be electrified and protected. At this time, if X2=On, coil Y1 will still protect the contact and continue to be electrified, and this is therefore priority start.

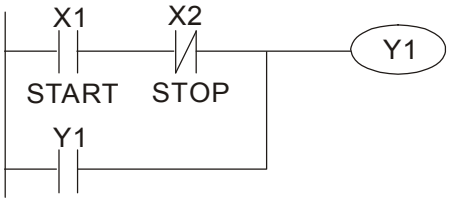


Example 3: Setting (SET) and reset (RST) command protective circuit

The following figure shows a protective circuit composed of RST and SET commands.

Priority stop occurs when the RST command is placed after the SET command. Because the PLC executes programs from the top down, at the end of the program, the state of Y1 will indicate whether coil Y1 is electrified. When X1 and X2 are both actuated, Y1 will lose power, and this is therefore priority stop.

Priority start occurs when the SET command is placed after the RST command. When X1 and X2 are both actuated, Y1 will be electrified, and this is therefore priority start.

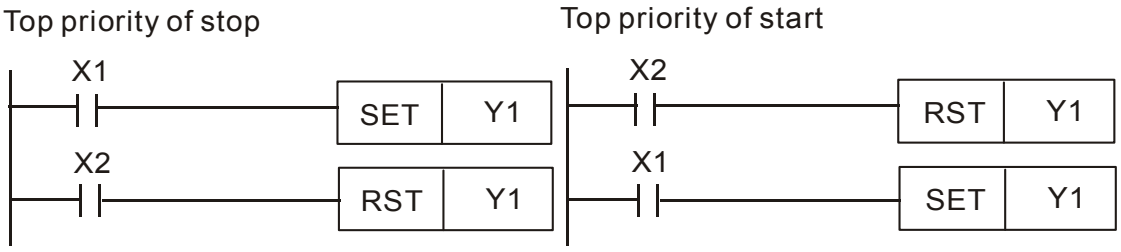

## Commonly-used control circuits

Example 4: Conditional control

X1, X3 are respectively start/stop Y1, and X2, X4 are respectively start/stop Y2; all have protective circuits. Because Y1's NO contact is in series with Y2's circuit, it becomes an AND condition for the actuation of Y2. The action of Y1 is therefore a condition for the action of Y2, and Y1 must be actuated before Y2 can be actuated.

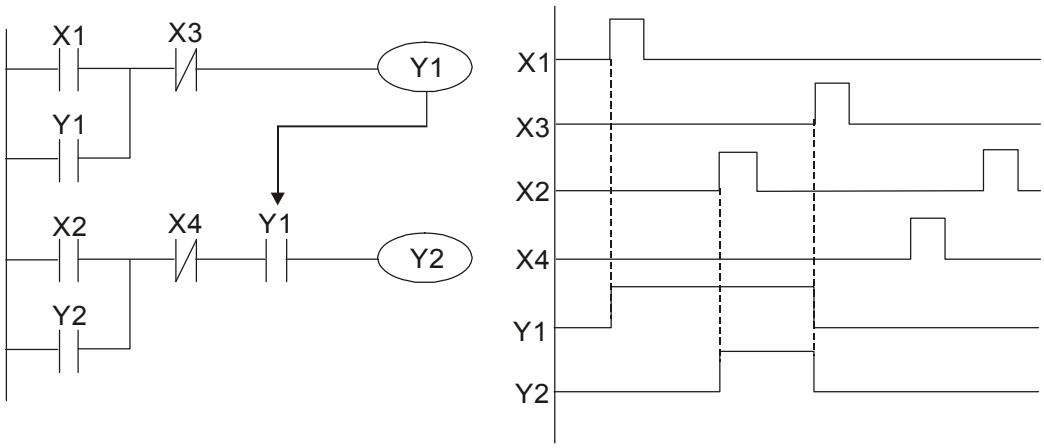


Example 5: Interlocking control

The figure below shows an interlocking control circuit. Depending on which of the start contacts X1, X2 is valid first, the corresponding output Y1 or Y2 will be actuated, and when one is actuated, the other will not be actuated. This implies that Y1 and Y2 cannot be actuated at the same time (interlocking effect). Even if both X1 and X2 are valid at the same time, because the ladder diagram program is scanned from the top down, it is impossible for Y1 and Y2 to be actuated at same time. This ladder diagram assigns priority only to Y1.

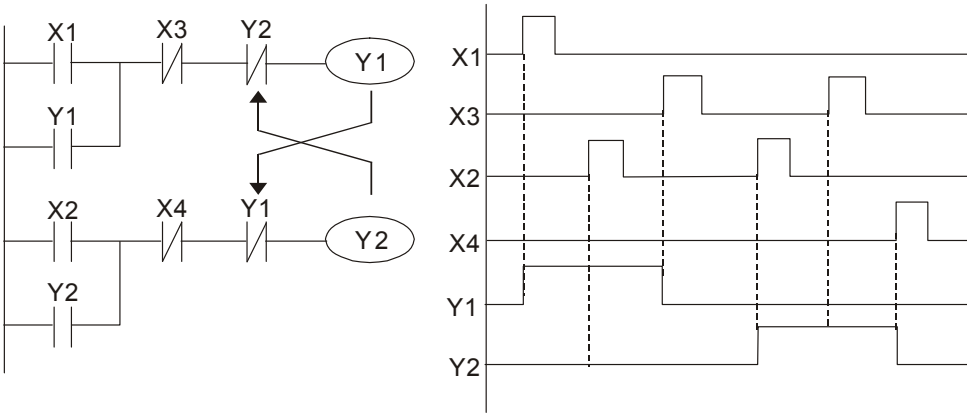

Example 6: Sequence control

If the NC contact of Y2 in the interlocking control configuration of example 5 is put in series with the Y1 circuit, so that it is an AND condition for actuation of Y1 (see figure below), not only is Y1 a condition for the actuation of Y2 in this circuit, the actuation of Y2 will also stop the actuation of Y1. This configuration confirms the actuation order of Y1 and Y2.

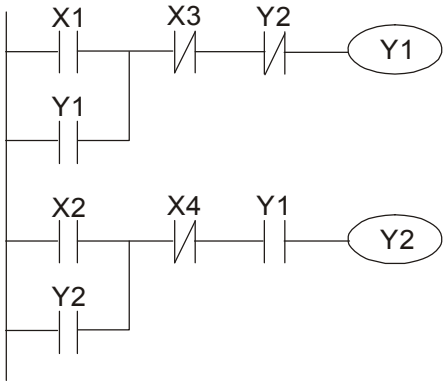


Example 7: Oscillating circuit

Oscillating circuit with a period of ΔT+ΔT

The figure below shows a very simple ladder diagram. When starting to scan the Y1 NC contact, because the Y1 coil has lost power, the Y1 NC contact will be closed. When the Y1 coil is then scanned, it will be electrified, and the output will be 1. When the Y1 NC contact is scanned in the scanning cycle, because Y1 coil is electrified, the Y1 NC contact will be open, the Y1 coil will then lose power, and the output will be 0. Following repeated scanning, the output of Y1 coil will have an oscillating waveform with a period of ΔT(On)+ΔT(Off).

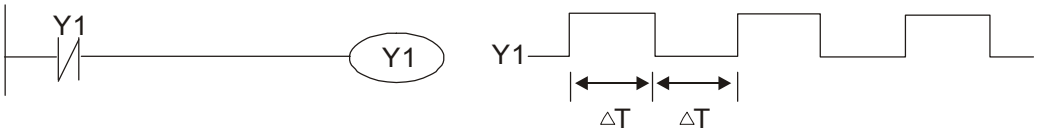


Oscillating circuit with a period of nT+ΔT

The program of the ladder diagram shown below uses timer T0 to control coil Y1's electrified time. After Y1 is electrified, it causes timer T0 to close during the next scanning cycle, which will cause the output from Y1 to have the oscillating waveform shown in the figure below. Here n is the timer's decimal setting value, and T is the clock cycle of the timer.

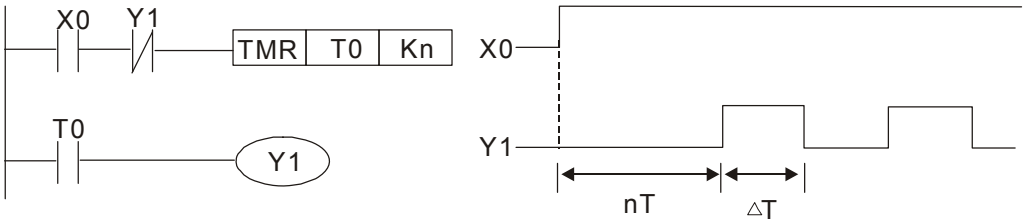

Example 8: Flashing circuit

The following figure shows an oscillating circuit of a type commonly used to cause an indicator light to flash or a buzzers to buzz. It uses two timers to control the On and Off time of Y1 coil. Here n1, n2 are the timing set values of T1 and T2, and T is the clock cycle of the timer.

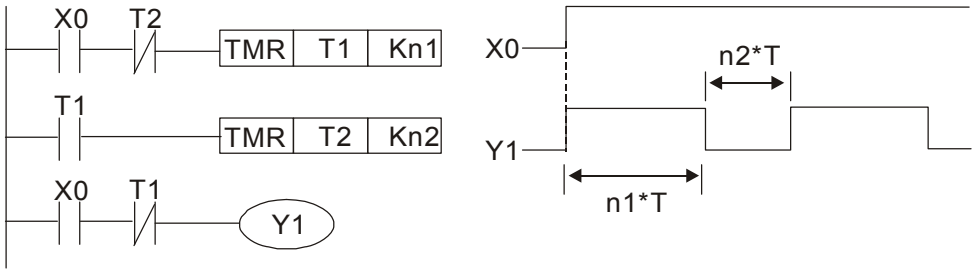


Example 9: Triggering circuit

In the figure below, a command consisting of the differential of the rising edge of X0 causes coil M0 to generate a single pulse for ΔT (length of one scanning cycle), and coil Y1 is electrified during this scanning cycle. Coil M0 loses power during the next scanning cycle, and NC contact M0 and NC contact Y1 are both closed. This causes coil Y1 to stay in an electrified state until there is another rising edge in input X0, which again causes the electrification of coil M0 and the start of another scanning cycle, while also causing coil Y1 to lose power, etc. The sequence of these actions can be seen in the figure below. This type of circuit is commonly used to enable one input to perform two actions in alternation. It can be seen from the time sequence in the figure below that when input X0 is a square wave signal with a period of T, the output of coil Y1 will be a square wave signal with a period of 2T.

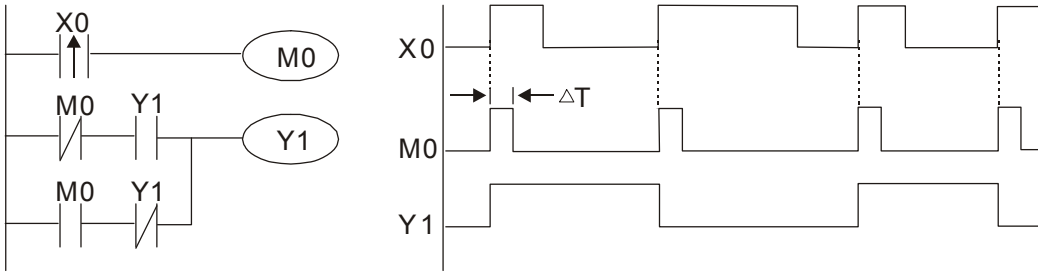


Example 10: Delay circuit

When input X0 is On, because the corresponding NC contact will be Off, the timer T10 will be in no power status, and output coil Y1 will be electrified. T10 will receive power and begin timing only after input X0 is Off, and output coil Y1 will be delayed for 100 sec. (K1000*0.1 sec. =100 sec.) before losing power; please refer to the sequence of actions in the figure below.

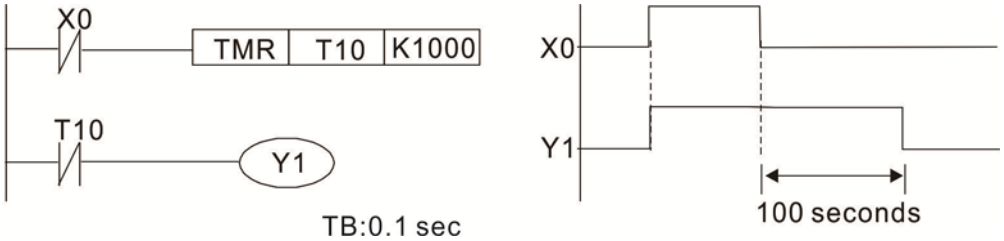

Example 11: The open/close delay circuit is composed of two timers; output Y4 will have a delay whether input X0 is On or Off.

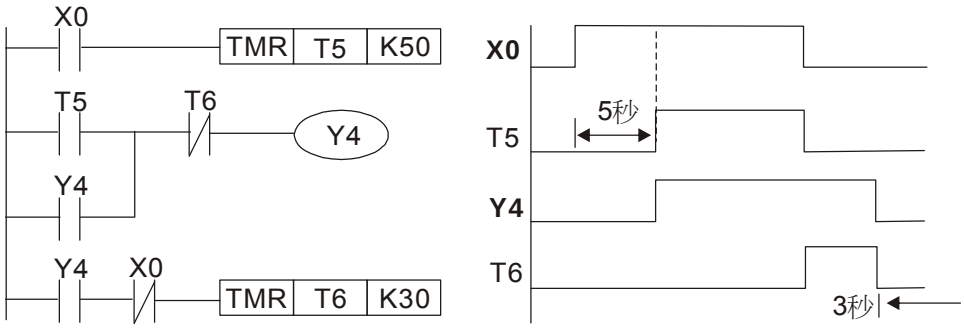


Example 12: Extended timing circuit

In the circuit in the figure on the left, the total delay time from the moment input X0 closes to the time output Y1 is electrified is (n1+n2)*T, where T is the clock cycle. Timers: T11, T12; clock cycle: T.

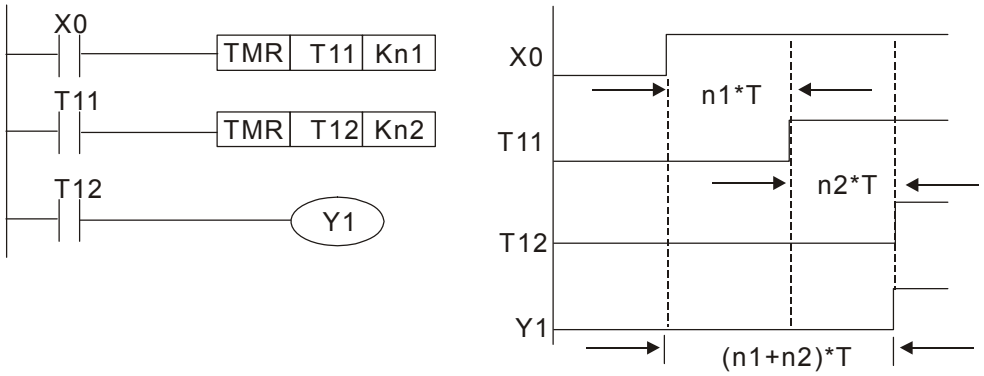

# 16-5 Various PLC device functions

| Item | Specifications | Notes |
|---|---|---|
| Algorithmic control method | Program stored internally, alternating back-and-forth scanning method | |
| Input/output control method | When it starts again after ending (after execution to the END command), the input/output has an immediate refresh command | |
| Algorithmic processing speed | Basic commands (several us); | Applications command (1-several tens of us) |
| Programming language | Command + ladder diagram | |
| Program capacity | 10000 steps | |
| Input/output terminal | Input (X): 10, output (Y): 3 | This number of contacts constitutes CP2000 input/output contacts; other devices have different correspondences |

| Type | Device | Item | | Range | | Function |
|---|---|---|---|---|---|---|
| Relay bit form | X | External input relay | | X0~X17, 16 points, octal number | Total 32 points | Corresponds to external input point |
| | Y | External output relay | | Y0~Y17, 16 points, octal number | | Corresponds to external output point |
| | M | Auxiliary Relay | General Use | M0~M799, 800 points | Total 880 points | Contact can switch On/Off within the program |
| | | | Special purpose | M1000~M1079, 80 points | | |
| | T | Timer | 100ms timer | T0~T159, 160 points | Total 160 points | Timers referred to by the TMR command; contact of the T with the same number will go On when the time is reached |
| | C | Counter | 16-bit counter, general use | C0~C79, 80 points | Total 80 points | Counter referred to by the CNT command; contact of the C with the same number will go On when the count is reached |
| Register word data | T | Current timer value | | T0~T159, 160 points | | The contact will be On when the time is reached |
| | C | Current counter value | | C0~C79, 16-bit counter 80 points | | The counter contact will come On when the count is reached |
| | D | Data Register | Used to maintain power Off | D0~D399, 400 points | Total 1400 points | Used as data storage memory area |
| | | | Special purpose | D1000~D1199, 200 points<br>D2000~D2799, 800 points | | |
| Constant | K | Decimal | Single-byte | Setting Range: K-32,768 ~ K32,767 | | |
| | | | Double-byte | Setting Range: K-2,147,483,648~K2,147,483,647 | | |
| | H | Hexadecimal | Single-byte | Setting Range:H0000 ~ HFFFF | | |
| | | | Double-byte | Setting Range: H00000000 ~ HFFFFFFFF | | |

| Type | Device | Item | Range | Function |
|---|---|---|---|---|
| Serial communications port (program write/read) | | | RS-485/keypad port | |
| Input/output | | | Built-in three analog inputs and two analog outputs | |
| Function expansion module | | Optional Accessories | EMC-D42A; EMC-R6AA; EMCD611A | |
| Communication Expansion Module | | Optional Accessories | EMC-COP01,(CANOpen) | |

# 16-5-1 Introduction to device functions

## Input/output contact functions

Input contact X functions: Input contact X is connected with an input device, and reads input signals entering the PLC. The number of times that contact a or b of input contact X is used in the program is not subject to restrictions. The On/Off state of input contact X will change as the input device switches On and Off; a peripheral device (WPLSoft) cannot be used to force contact X On or Off.

## Output contact Y functions

The job of output contact Y is to send an On/Off signal to drive the load connected with output contact Y. Output contacts consist of two types: relays and transistors. While number of times that contact a or b of each output contact Y is used in the program is not subject to restrictions, it is recommended that the number of output coil Y be used only once in a program, otherwise the right to determine the output state when the PLC performs program scanning will be assigned to the program's final output Y circuit.

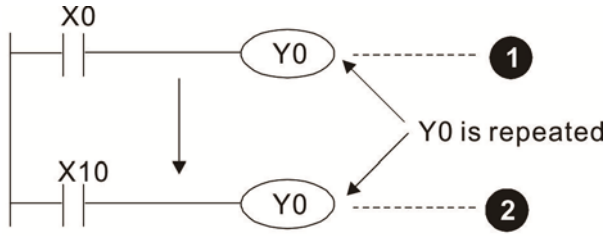


The output of Y0 will be decided by circuit ❷ ,
i.e. decided by On/Off of X10.

## Numerical value, constant [K]/[H]

| | | | | |
|---|---|---|---|---|
| Constant | Single-byte | K | Decimal | K-32,768 ~ K32,767 |
| | Double-byte | | | K-2,147,483,648~K2,147,483,647 |
| | Single-byte | H | Hexadecimal | H0000 ~ HFFFF |
| | Double-byte | | | H00000000 ~ HFFFFFFFF |

The PLC can use five types of numerical values to implement calculations based on its control tasks; the following is an explanation of the missions and functions of different numerical values.

Binary Number, BIN

The PLC's numerical operations and memory employ binary numbers. Binary nibbles and relevant terms are explained as follows:

| | |
|---|---|
| Bit | Bits are the fundamental units of binary values, and have a state of either 1 or 0 |
| Nibble | Comprised of a series of 4 bits (such as b3-b0); can be used to express a one-nibble decimal number 0-9 or hexadecimal number: 0-F. |
| Byte | Comprised of a series of two nibbles (i.e. 8 bits, b7-b0); can express a hexadecimal number: 00-FF. |
| Word | Comprised of a series of two bytes (i.e. 16 bits, b15-b0); can express a hexadecimal number with four nibbles: 0000-FFFF. |
| Double Word | Comprised of a series of two words (i.e. 32 bits, b31-b0); can express a hexadecimal number with eight nibbles: 00000000-FFFFFFFF |

Relationship between bits, digits, nibbles, words, and double words in a binary system (see figure below):

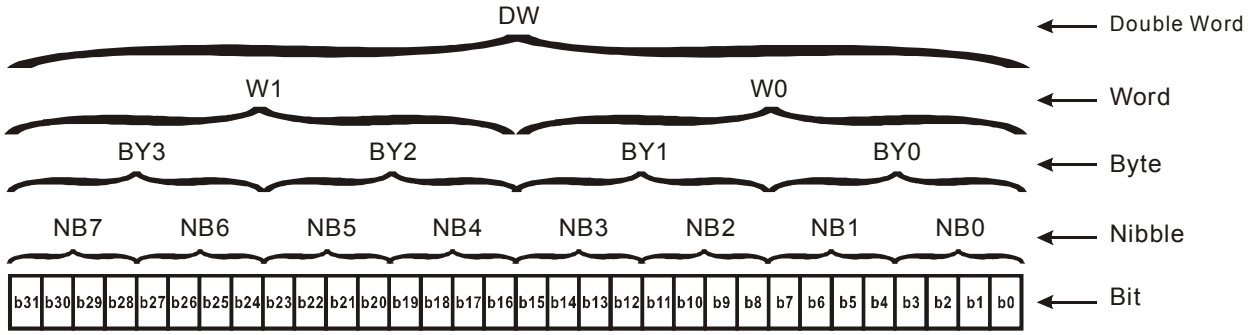


Octal Number, OCT

The external input and output terminals of a DVP-PLC are numbered using octal numbers

Example: External input: X0~X7，X10~X17…(Device number table);

External output: Y0~Y7，Y10~Y17…(Device number table)

Decimal Number, DEC

Decimal numbers are used for the following purposes in a PLC system:

The setting values of timer T or counter C, such as TMR C0 K50. (K constant)

The numbers of devices including M, T, C, or D, such as M10 or T30. (device number)

Used as a operand in an application command, such as MOV K123 D0. (K constant)

Binary Code Decimal, BCD

Uses one nibble or 4 bits to express the data in a decimal number; a series of 16 bits can therefore express a decimal number with 4 nibbles. Chiefly used to read the input value of a fingerwheel numerical switch input or output a numerical value to a seven-segment display driver.

Hexadecimal Number, HEX

Applications of hexadecimal numbers in a PLC system: Used as operands in application commands, such as MOV H1A2B D0. (H constant)

Constant K

Decimal numbers are usually prefixed with a "K" in a PLC system, such as K100. This indicates that it is a decimal number with a numerical value of 100.

Exceptions: K can be combined with bit device X, Y, M, or S to produce data in the form of a nibble, byte, word, or double word, such as in the case of K2Y10 or K4M100. Here K1 represents a 4-bit combination, and K2-K4 variously represent 8-, 12-, and 16-bit combinations.

Constant H

Hexadecimal numbers are usually prefixed with the letter "H" in a PLC system, such as in the case of H100, which indicates a hexadecimal number with a numerical value of 100.

## Functions of auxiliary relays

Like an output relay Y, an auxiliary relay M has an output coil and contacts a and b, and the number of times they can be used in a program is unrestricted. Users can use an auxiliary relay M to configure the control circuit, but cannot use it to directly drive an external load. Auxiliary relays have the following two types of characteristics:

Ordinary auxiliary relays: Ordinary auxiliary relays will all revert to the Off state if a power outage occurs while the PLC is running, and will remain in the Off state if power is again turned down.

Special purpose auxiliary relays: Each special purpose auxiliary relay has its own specific use. Do not use any undefined special purpose auxiliary relays.

## Timer functions

Timers take 100 ms as their timing units. When the timing method is an upper time limit, when the current timer value = set value, power will be sent to the output coil. Timer setting values consist of decimal K values, and the data register D can also serve as a setting value.

Actual timer setting time = timing units * set value

Counter features

| Item | 16-bit counter |
|---|---|
| Type | General Type |
| CT Direction: | Score: |
| Setting | 0~32,767 |
| Designation of set value | Constant K or data register D |
| Change in current value | When the count reaches the set value, there is no longer a count |
| Output contact | When the count reaches the set value, the contact comes On and stays On |
| Reset | The current value reverts to 0 when an RST command is executed, and the contact reverts to Off |
| Contact actuation | All are actuated after the end of scanning |

Counter functions

When a counter's counting pulse input signal goes Off→On, if the counter's current value is equal to the set value, the output coil will come On. The setting value will be a decimal K values, and the data register D can also serve as a setting value.

16-bit counter C0-C79:

- ☑ 16-bit counter setting range: K0-K32,767. (when K0 and K1 are identical, the output contact will immediately be On during the first count.)
- ☑ The current counter value will be cleared from an ordinary counter when power is shut off to the PLC.
- ☑ If the MOV command or WPLSoft is used to transmit a value greater than the set value to the C0 current value register, when the next X1 goes from Off→On, the C0 counter contact will change to On, and the current value will change to the set value.
- ☑ A counter's setting value may be directly set using a constant K or indirectly set using the value in register D (not including special data registers D1000- D1199 或 D2000 ~ D2799).
- ☑ If the set value employs a constant K, it may only be a positive number; the set value may be either a positive or negative number if the value in data register D is used. The current counter value will change from 32,767 to -32,768 as the count continues to accumulate.

Example

```
LD      X0
RST     C0
LD      X1
CNT     C0   K5
LD      C0
OUT     Y0
```

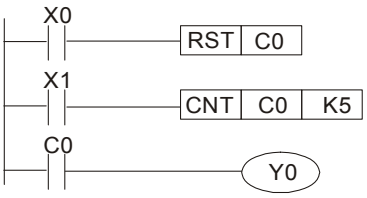


1. When X0=On and the RST command is executed, the current value of C0 will revert to 0, and the output contact will revert to Off.
2. When X1 changes from Off→On, the current value of the counter will execute an increase (add one).
3. When the count of counter C0 reaches the set value K5, the contact C0 will come On, and the current value of C0＝ set value =K5. Afterwards, signal C0 triggered by X1 cannot be received, and the current value of C0 will remain K5.

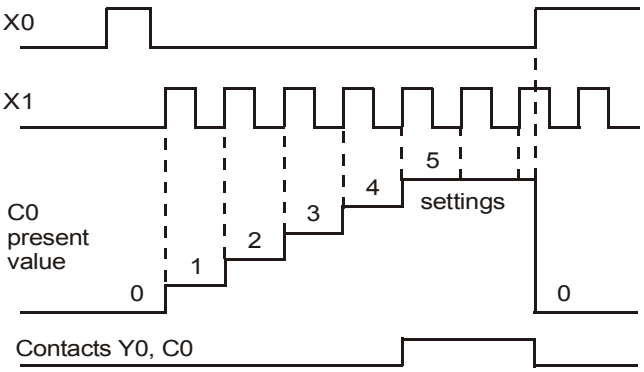

# 16-5-2 Introduction to special relay functions (special M)

R/W items: RO: read only function; RW: read and write function

| Special M | Description of Function | R/W * |
|---|---|---|
| M1000 | Operates monitor NO contact (contact a). NO while RUN, contact a. This contact is On while in the RUN state. | RO |
| M1001 | Operates monitor NC contact (contact b). NC while RUN, contact b. This contact is Off while in the RUN state. | RO |
| M1002 | Initiates a forward (the instant RUN is On) pulse. Initial pulse, contact a. Produces a forward pulse the moment RUN begins; its width = scan cycle | RO |
| M1003 | Initiates a reverse (the instant RUN is Off) pulse. Initial pulse, contact a. Produces a reverse pulse the moment RUN ends; the pulse width = scan cycle | RO |
| M1004 | Reserved | RO |
| M1005 | Driver malfunction instructions | RO |
| M1006 | Converter has no output | RO |
| M1007 | Driver direction FWD(0)/REV(1) | RO |
| M1008 ~ M1010 | -- | -- |
| M1011 | 10 ms clock pulse ，5ms On/5ms Off | RO |
| M1012 | 100 ms clock pulse ，50ms On / 50ms Off | RO |
| M1013 | 1 sec. clock pulse ，0.5s On / 0.5s Off | RO |
| M1014 | 1 min. clock pulse ，30s On / 30s Off | RO |
| M1015 | Frequency attained (when used together with M1025) | RO |
| M1016 | Parameter read/write error | RO |
| M1017 | Parameter write successful | RO |
| M1018 | -- | -- |
| M1019 | -- | -- |
| M1020 | Zero flag | RO |
| M1021 | Borrow flag | RO |
| M1022 | Carry flag | RO |
| M1023 | Divisor is 0 | RO |
| M1024 | -- | -- |
| M1025 | Driver frequency = set frequency (ON)<br>Driver frequency =0(OFF) | RW |
| M1026 | Driver operating direction FWD(OFF)/REV(ON) | RW |
| M1027 | Driver Reset | RW |
| M1028 | -- | -- |
| M1029 | -- | -- |
| M1030 | -- | -- |
| M1031 | Compulsory setting of the current PID integral value equal to D1019 (0 change, 1 valid) | RW |
| M1032 | Compulsory definition of FREQ command after PID control | RW |
| M1033 | -- | -- |
| M1034 | Initiates CANopen real-time control | RW |
| M1035 | Initiates internal communications control | RW |
| M1036 | Ignore calendar error | RW |
| M1037 | -- | -- |
| M1038 | -- | -- |
| M1039 | -- | -- |
| M1040 | Hardware power (Servo On) | RW |
| M1041 | -- | -- |
| M1042 | Quick stop | RW |

| Special M | Description of Function | R/W * |
|---|---|---|
| M1043 | -- | -- |
| M1044 | Pause | RW |
| M1045 ~ M1047 | -- | -- |
| M1048 | -- | -- |
| M1049 | -- | -- |
| M1050 | -- | -- |
| M1051 | -- | -- |
| M1052 | Lock frequency (lock, frequency locked at the current operating frequency) | RW |
| M1053 | -- | -- |
| M1054 | -- | -- |
| M1055 | -- | -- |
| M1056 | Hardware already has power (Servo On Ready) | RO |
| M1057 | -- | -- |
| M1058 | On Quick Stopping | RO |
| M1059 | CANopen Master setting complete | RO |
| M1060 | CANopen Currently initializing slave station | RO |
| M1061 | CANopen Slave station initialization failure | RO |
| M1062 | -- | -- |
| M1063 | -- | -- |
| M1064 | -- | -- |
| M1065 | Read/write CANOpen data time out | RO |
| M1066 | Read/write CANopen data complete | RO |
| M1067 | Read/write CANopen data successful | RO |
| M1068 | Calendar calculation error | RO |
| M1069 | -- | -- |
| M1070 | -- | -- |
| M1071 | -- | -- |
| M1072 ~ M1075 | -- | -- |
| M1076 | Calendar time error or refresh time out | RO |
| M1077 | 485 Read/write complete | RO |
| M1078 | 485 Read-write error | RO |
| M1079 | 485 Communications time out | RO |

# 16-5-3 Introduction to special register functions (special D)

| Special D | Description of Function | R/W * |
|---|---|---|
| D1000 | -- | -- |
| D1001 | Device system program version | RO |
| D1002 | Program capacity | RO |
| D1003 | Total program memory content | RO |
| D1004 ~ D1009 | -- | -- |
| D1010 | Current scan time (units: 0.1 ms) | RO |
| D1011 | Minimum scan time (units: 0.1 ms) | RO |
| D1012 | Maximum scan time (units: 0.1 ms) | RO |
| D1013 ~ D1017 | -- | -- |
| D1018 | Current integral value | RO |
| D1019 | Compulsory setting of PID I integral | RW |
| D1020 | Output frequency (0.00~600.00Hz) | RO |
| D1021 | Output current (####.#A) | RO |
| D1022 | AI AO DI DO Expansion card number<br>0：No expansion card<br>4：AC input card ( 6 in ) (EMC-D611A)<br>5：I/O Card ( 4 in 2 out ) (EMC-D42A)<br>6：Relay card( 6 out ) (EMC-R6AA) | RO |
| D1023 | Communication expansion card number<br>0：No expansion card<br>1：DeviceNet Slave<br>2：Profibus-DP Slave<br>3：CANopen Slave<br>4：Modbus-TCP Slave<br>5：EtherNet/IP Slave | RO |
| D1024 ~ D1026 | -- | -- |
| D1027 | PID calculation frequency command (frequency command after PID calculation) | RO |
| D1028 | AVI1value (0.00~100.00%) | RO |
| D1029 | ACI value (0.0~100.00%) | RO |
| D1030 | AVI2 value (0.00~100.00%) | RO |
| D1031 ~ D1035 | -- | -- |
| D1036 | Servo error bit | RO |
| D1037 | Driver output frequency | RO |
| D1038 | DC BUS voltage | RO |
| D1039 | Output voltage | RO |
| D1040 | Analog output value AFM1(-100.00~100.00%) | RW |
| D1041 ~ D1042 | -- | -- |
| D1043 | Can be user-defined (will be displayed on panel when parameter 00-04 is set as 28; display method is C xxx) | RW |
| D1044 | -- | - |

| Special D | Description of Function | R/W * |
|---|---|---|
| D1045 | Analog output value AFM2(-100.00~100.00%) | RW |
| D1046 ~ D1049 | -- | -- |
| D1050 | Actual Operation Mode<br>0：Speed | RO |
| D1051 | -- | -- |
| D1052 | -- | -- |
| D1053 | -- | -- |
| D1054 | -- | -- |
| D1055 | -- | -- |
| D1056 | -- | -- |
| D1057 | -- | -- |
| D1058 | -- | -- |
| D1059 | -- | -- |
| D1060 | Operation Mode setting<br>0：Speed | RW |
| D1061 | 485 COM1 communications time out time (ms) | RW |
| D1062 | Torque command (torque limit in speed mode) | RW |
| D1063 | Year (Western calendar) (display range 2000-2099) (must use KPC-CC01) | RO |
| D1064 | Week (display range 1-7) (must use KPC-CC01) | RO |
| D1065 | Month (display range 1-12) (must use KPC-CC01) | RO |
| D1066 | Day (display range 1-31) (must use KPC-CC01) | RO |
| D1067 | Hour (display range 0-23) (must use KPC-CC01) | RO |
| D1068 | Minute (display range 0-59) (must use KPC-CC01) | RO |
| D1069 | Second (display range 0-59) (must use KPC-CC01) | RO |
| D1100 | Target frequency | RO |
| D1101 | Target frequency (must be operating) | RO |
| D1102 | Reference frequency | RO |
| D1103 | -- | -- |
| D1104 | -- | -- |
| D1105 | -- | -- |
| D1106 | -- | -- |
| D1107 | π(Pi) Low word | RO |
| D1108 | π(Pi) High word | RO |
| D1109 | Random number | RO |
| D1110 | Internal node communications number (set number of slave stations to be controlled) | RW |
| D1111 | -- | -- |
| D1112 | -- | -- |
| D1113 | -- | -- |
| D1114 | -- | -- |
| D1115 | Internal node synchronizing cycle (ms) | RO |
| D1116 | Internal node error (bit0 = Node 0, bit1 = Node 1,…bit7 = Node 7) | RO |
| D1117 | Internal node online correspondence (bit0 = Node 0, bit1 = Node 1,…bit7 = Node 7) | RO |
| D1118 | -- | -- |
| D1119 | -- | -- |
| D1120 | Internal node 0 control command | RW |
| D1121 | Internal node 0 mode | RW |
| D1122 | Internal node 0 reference command L | RW |
| D1123 | Internal node 0 reference command H | RW |

| Special D | Description of Function | R/W * |
|---|---|---|
| D1124 | -- | -- |
| D1125 | -- | -- |
| D1126 | Internal node 0 status | RO |
| D1127 | Internal node 0 reference status L | RO |
| D1128 | Internal node 0 reference status H | RO |
| D1129 | -- | -- |
| D1130 | Internal node 1 control command | RW |
| D1131 | Internal node 1 mode | RW |
| D1132 | Internal node 1 reference command L | RW |
| D1133 | Internal node 1 reference command H | RW |
| D1134 | -- | -- |
| D1135 | -- | -- |
| D1136 | Internal node 1 status | RO |
| D1137 | Internal node 1 reference status L | RO |
| D1138 | Internal node 1 reference status H | RO |
| D1139 | -- | -- |
| D1140 | Internal node 2 control command | RW |
| D1141 | Internal node 2 mode | RW |
| D1142 | Internal node 2 reference command L | RW |
| D1143 | Internal node 2 reference command H | RW |
| D1144 | -- | -- |
| D1145 | -- | -- |
| D1146 | Internal node 2 status | RO |
| D1147 | Internal node 2 reference status L | RO |
| D1148 | Internal node 2 reference status H | RO |
| D1149 | -- | -- |
| D1150 | Internal node 3 control command | RW |
| D1151 | Internal node 3 mode | RW |
| D1152 | Internal node 3 reference command L | RW |
| D1153 | Internal node 3 reference command H | RW |
| D1154 | -- | -- |
| D1155 | -- | -- |
| D1156 | Internal node 3 status | RO |
| D1157 | Internal node 3 reference status L | RO |
| D1158 | Internal node 3 reference status H | RO |
| D1159 | -- | -- |
| D1160 | Internal node 4 control command | RW |
| D1161 | Internal node 4 mode | RW |
| D1162 | Internal node 4 reference command L | RW |
| D1163 | Internal node 4 reference command H | RW |
| D1164 | -- | -- |
| D1165 | -- | -- |
| D1166 | Internal node 4 status | RO |
| D1167 | Internal node 4 reference status L | RO |
| D1168 | Internal node 4 reference status H | RO |
| D1169 | -- | -- |
| D1170 | Internal node 5 control command | RW |
| D1171 | Internal node 5 mode | RW |
| D1172 | Internal node 5 reference command L | RW |
| D1173 | Internal node 5 reference command H | RW |
| D1174 | -- | RW |
| D1175 | -- | -- |
| D1176 | Internal node 5 status | -- |

| Special D | Description of Function | R/W * |
|---|---|---|
| D1177 | Internal node 5 reference status L | RO |
| D1178 | Internal node 5 reference status H | RO |
| D1179 | -- | -- |
| D1180 | Internal node 6 control command | RW |
| D1181 | Internal node 6 mode | RW |
| D1182 | Internal node 6 reference command L | RW |
| D1183 | Internal node 6 reference command H | RW |
| D1184 | -- | -- |
| D1185 | -- | -- |
| D1186 | Internal node 6 status | RO |
| D1187 | Internal node 6 reference status L | RO |
| D1188 | Internal node 6 reference status H | RO |
| D1189 | -- | -- |
| D1190 | Internal node 7 control command | RW |
| D1191 | Internal node 7 mode | RW |
| D1192 | Internal node 7 reference command L | RW |
| D1193 | Internal node 7 reference command H | RW |
| D1194 | -- | -- |
| D1195 | -- | -- |
| D1196 | Internal node 7 status | RO |
| D1197 | Internal node 7 reference status L | RO |
| D1198 | Internal node 7 reference status H | RO |
| D1199 | -- | -- |

## The following is CANopen Master's special D (can be written in only with PLC in Stop state)

n = 0 ~ 7

| Special D | Description of Function | PDO Map | Power off Memory | Default: | R/W |
|---|---|---|---|---|---|
| D1070 | Channel opened by CANopen initialization (bit0=Machine code0 …….) | NO | NO | 0 | R |
| D1071 | Error channel occurring in CANopen initialization process (bit0=Machine code0 …….) | NO | NO | 0 | R |
| D1072 | Reserved | - | - | | - |
| D1073 | CANopen break channel (bit0=Machine code0 …….) | NO | NO | | R |
| D1074 | Error code of master error<br>0: No error<br>1: Slave station setting error<br>2: Synchronizing cycle setting error (too small) | NO | NO | 0 | R |
| D1075 | Reserved | - | - | | - |
| D1076 | SDO error message (main index value) | NO | NO | | R |
| D1077 | SDO error message (secondary index value) | NO | NO | | R |
| D1078 | SDO error message (error code) | NO | NO | | R |
| D1079 | SDO error message (error code) | NO | NO | | R |
| D1080 | Reserved | - | - | | - |
| D1081 ~ D1086 | Reserved | - | - | | - |
| D1087 ~ D1089 | Reserved | - | - | | - |
| D1090 | Synchronizing cycle setting | NO | YES | 4 | RW |

| Special D | Description of Function | PDO Map | Power off Memory | Default: | R/W |
|---|---|---|---|---|---|
| D1091 | Sets slave station On or Off (bit 0-bit 7 correspond to slave stations number 0-7) | NO | YES | FFFFH | RW |
| D1092 | Delay before start of initialization | NO | YES | 0 | RW |
| D1093 | Break time detection | NO | YES | 1000ms | RW |
| D1094 | Break number detection | NO | YES | 3 | RW |
| D1095 ~ D1096 | Reserved | - | - | | - |
| D1097 | Corresponding real-time transmission type (PDO)<br>Setting range: 1~240 | NO | YES | 1 | RW |
| D1098 | Corresponding real-time receiving type (PDO)<br>Setting range: 1~240 | NO | YES | 1 | RW |
| D1099 | Initialization completion delay time<br>Setting range: 1 to 60000 sec | NO | YES | 15 sec. | RW |
| D2000+100*n | Station number n of slave station<br>Setting range: 0~127<br>0: No CANopen function | NO | YES | 0 | RW |

The CP2000 supports 8 slave stations under the CANopen protocol; each slave station occupies 100 special D locations; stations are numbered 1-8, total of 8 stations.

**Explanation of slave station number and**

| | | |
|---|---|---|
| Slave station no. 1 | D2000 | Node ID |
| | D2001 | Slave station no. 1 torque restrictions |
| | ~ | ~ |
| | D2099 | Address 4(H) corresponding to receiving channel 4 |
| Slave station no. 2 | D2100 | Node ID |
| | D2101 | Slave station no. 2 torque restrictions |
| | ~ | ~ |
| | D2199 | Address 4(H) corresponding to receiving channel 4 |
| Slave station no. 3 | D2200 | Node ID |
| | D2201 | Slave station no. 3 torque restrictions |
| | ~ | ~ |
| | D2299 | Address 4(H) corresponding to receiving channel 4 |
| | ⇩ | |
| Slave station no. 8 | D2700 | Node ID |
| | D2701 | Slave station no. 8 torque restrictions |
| | ~ | ~ |
| | D2799 | Address 4(H) corresponding to receiving channel 4 |

1. The range of n is 0-7

2. ●Indicates PDOTX, ▲Indicates PDORX; unmarked special D can be refreshed using the CANFLS command

| Special D | Description of Function | Default: | R/W |
|---|---|---|---|
| D2000+100*n | Station number n of slave station<br>Setting range: 0~127<br>0: No CANopen function | 0 | RW |
| D2002+100*n | Manufacturer code of slave station number n (L) | 0 | R |
| D2003+100*n | Manufacturer code of slave station number n (H) | 0 | R |
| D2004+100*n | Manufacturer's product code of slave station number n (L) | 0 | R |
| D2005+100*n | Manufacturer's product code of slave station number n (H) | 0 | R |

## Basic definitions

| Special D | Description of Function | Default: | CAN Index | PDO Default: | | | | R/W |
|---|---|---|---|---|---|---|---|---|
| | | | | 1 | 2 | 3 | 4 | |
| D2006+100*n | Communications break handling method of slave station number n | 0 | 6007H-0010H | | | | | RW |
| D2007+100*n | Error code of slave station number n error | 0 | 603FH-0010H | | | | | R |
| D2008+100*n | Control word of slave station number n | 0 | 6040H-0010H | ● | | ● | ● | RW |
| D2009+100*n | Status word of slave station number n | 0 | 6041H-0010H | ▲ | | ▲ | ▲ | R |
| D2010+100*n | Control mode of slave station number n | 2 | 6060H-0008H | | | | | RW |
| D2011+100*n | Actual mode of slave station number n | 2 | 6061H-0008H | | | | | R |

## Velocity Control

Slave station number n=0-7

| Special D | Description of Function | Default: | CAN Index | PDO Default: | | | | R/W |
|---|---|---|---|---|---|---|---|---|
| | | | | 1 | 2 | 3 | 4 | |
| D2001+100*n | Torque restriction on slave station number n | 0 | 6072H-0010H | | | | | RW |
| D2012+100*n | Target speed of slave station number n | 0 | 6042H-0010H | ● | | | | RW |
| D2013+100*n | Actual speed of slave station number n | 0 | 6043H-0010H | ▲ | | | | R |
| D2014+100*n | Error speed of slave station number n | 0 | 6044H-0010H | | | | | R |
| D2015+100*n | Acceleration time of slave station number n | 1000 | 604FH-0020H | | | | | R |
| D2016+100*n | Deceleration time of slave station number n | 1000 | 6050H-0020H | | | | | RW |

## Torque control

Slave station number n=0-7

| Special D | Description of Function | Default: | CAN Index | PDO Default: | | | | R/W |
|---|---|---|---|---|---|---|---|---|
| | | | | 1 | 2 | 3 | 4 | |
| D2017+100*n | Target torque of slave station number n | 0 | 6071H-0010H | | | | ● | RW |
| D2018+100*n | Actual torque of slave station number n | 0 | 6077H-0010H | | | | ▲ | R |
| D2019+100*n | Actual current of slave station number n | 0 | 6078H-0010H | | | | | R |

## Position control

Slave station number n=0-7

| Special D | Description of Function | Default: | CAN Index | PDO Default: | | | | R/W |
|---|---|---|---|---|---|---|---|---|
| | | | | 1 | 2 | 3 | 4 | |
| D2020+100*n | Target of slave station number n (L) | 0 | 607AH-0020H | | | ● | | RW |
| D2021+100*n | Target of slave station number n (H) | 0 | | | | | | RW |
| D2022+100*n | Actual position of slave station number n (L) | 0 | 6064H-0020H | | | ▲ | | R |
| D2023+100*n | Actual position of slave station number n (H) | 0 | | | | | | R |
| D2024+100*n | Speed chart of slave station number n (L) | 10000 | 6081H-0020H | | | | | RW |
| D2025+100*n | Speed chart of slave station number n (H) | 0 | | | | | | RW |

## 20XXH correspondences: MI MO AI AO

Slave station number n=0-7

| Special D | Description of Function | Default: | CAN Index | PDO Default: | | | | R/W |
|---|---|---|---|---|---|---|---|---|
| | | | | 1 | 2 | 3 | 4 | |
| D2026+100*n | MI status of slave station number n | 0 | 2026H-0110H | | ▲ | | | RW |
| D2027+100*n | MO setting of slave station number n | 0 | 2026H-4110H | | ● | | | RW |
| D2028+100*n | AI1 status of slave station number n | 0 | 2026H-6110H | | ▲ | | | RW |
| D2029+100*n | AI2 status of slave station number n | 0 | 2026H-6210H | | ▲ | | | RW |
| D2030+100*n | AI3 status of slave station number n | 0 | 2026H-6310H | | ▲ | | | RW |
| D2031+100*n | AO1 status of slave station number n | 0 | 2026H-A110H | | ● | | | RW |
| D2032+100*n | AO2 status of slave station number n | 0 | 2026H-A210H | | ● | | | RW |
| D2033+100*n | AO3 status of slave station number n | 0 | 2026H-A310H | | ● | | | RW |

PDO reflection length setting:

| Special D | Description of Function | Default: | R/W |
|---|---|---|---|
| D2034+100*n | Real-time transmission setting of slave station number n | 000AH | RW |
| D2067+100*n | Real-time reception setting of slave station number n | 0000H | RW |

## 16-5-4 PLC Communication address

| Device | Range | Type | Address (Hex) |
|---|---|---|---|
| X | 00~37 (Octal) | bit | 0400~041F |
| Y | 00~37 (Octal) | bit | 0500~051F |
| T | 00~159 | bit/word | 0600~069F |
| M | 000~799 | bit | 0800~0B1F |
| M | 1000~1079 | bit | 0BE8~0C37 |
| C | 0~79 | bit/word | 0E00~0E47 |
| D | 00~399 | word | 1000~118F |
| D | 1000~1199 | word | 13E8~14AF |
| D | 2000~2799 | word | 17D0~1AEF |

Command code that can be used

| Function Code | Description of Function | Function target |
|---|---|---|
| 01 | Coil status read | Y,M,T,C |
| 02 | Input status read | X,Y,M,T,C |
| 03 | Read single unit of data | T,C,D |
| 05 | Compulsory single coil status change | Y,M,T,C |
| 06 | Write single unit of data | T,C,D |
| 0F | Compulsory multiple coil status change | Y,M,T,C |
| 10 | Write multiple units of data | T,C,D |

**NOTE**

When PLC functions have been activated, the CP2000 can match PLC and driver parameters; this method employs different addresses, drivers (default station number is 1, PLC sets station number as 2)

# 16-6 Introduction to the Command Window

## 16-6-1 Overview of basic commands

### Ordinary commands

| Command code | Function | OPERAND | Execution speed (us) |
|---|---|---|---|
| LD | Load contact a | X、Y、M、T、C | 0.8 |
| LDI | Load contact b | X、Y、M、T、C | 0.8 |
| AND | Connect contact a in series | X、Y、M、T、C | 0.8 |
| ANI | Connect contact b in series | X、Y、M、T、C | 0.8 |
| OR | Connect contact a in parallel | X、Y、M、T、C | 0.8 |
| ORI | Connect contact b in parallel | X、Y、M、T、C | 0.8 |
| ANB | Series circuit block | N/A | 0.3 |
| ORB | Parallel circuit block | N/A | 0.3 |
| MPS | Save to stack | N/A | 0.3 |
| MRD | Stack read (pointer does not change) | N/A | 0.3 |
| MPP | Read stack | N/A | 0.3 |

### Output command

| Command code | Function | OPERAND | Execution speed (us) |
|---|---|---|---|
| OUT | Drive coil | Y、M | 1 |
| SET | Action continues (ON) | Y、M | 1 |
| RST | Clear contact or register | Y、M、T、C、D | 1.2 |

### Timer, counter

| Command code | Function | OPERAND | Execution speed (us) |
|---|---|---|---|
| TMR | 16-bit timer | T-K or T-D commands | 1.1 |
| CNT | 16-bit counter | C-K or C-D (16-bit) | 0.5 |

### Main control command

| Command code | Function | OPERAND | Execution speed (us) |
|---|---|---|---|
| MC | Common series contact connection | N0~N7 | 0.4 |
| MCR | Common series contact release | N0~N7 | 0.4 |

### Contact rising edge/falling edge detection command

| Command code | Function | OPERAND | Execution speed (us) |
|---|---|---|---|
| LDP | Start of forward edge detection action | X、Y、M、T、C | 1.1 |
| LDF | Start of reverse edge detection action | X、Y、M、T、C | 1.1 |
| ANDP | Forward edge detection series connection | X、Y、M、T、C | 1.1 |
| ANDF | Reverse edge detection series connection | X、Y、M、T、C | 1.1 |
| ORP | Forward edge detection parallel connection | X、Y、M、T、C | 1.1 |
| ORF | Reverse edge detection parallel connection | X、Y、M、T、C | 1.1 |

## Upper/lower differential output commands

| Command code | Function | OPERAND | Execution speed (us) |
|---|---|---|---|
| PLS | Upper differential output | Y、M | 1.2 |
| PLF | Lower differential output | Y、M | 1.2 |

## Stop command

| Command code | Function | OPERAND | Execution speed (us) |
|---|---|---|---|
| END | Program conclusion | N/A | 0.2 |

## Other commands

| Command code | Function | OPERAND | Execution speed (us) |
|---|---|---|---|
| NOP | No action | N/A | 0.2 |
| INV | Inverse of operation results | N/A | 0.2 |
| P | Index | P | 0.3 |

# 16-6-2 Detailed explanation of basic commands

| Command | Function | | | | | |
|---|---|---|---|---|---|---|
| **LD** | Load contact a | | | | | |
| Operand | X0~X17 | Y0~Y17 | M0~M799 | T0~159 | C0~C79 | D0~D399 |
| | ✓ | ✓ | ✓ | ✓ | ✓ | — |

Explanation: The LD command is used for contact a starting at the left busbar or contact a starting at a contact circuit block; its function is to save current content and save the acquired contact status in the cumulative register.

Example: Ladder diagram:

| Command code: | | Description: |
|---|---|---|
| **LD** | **X0** | Load Contact a of X0 |
| AND | X1 | Create series connection to contact a of X1 |
| OUT | Y1 | Drive Y1 coil |

| Command | Function | | | | | |
|---|---|---|---|---|---|---|
| **LDI** | Load contact b | | | | | |
| Operand | X0~X17 | Y0~Y17 | M0~M799 | T0~159 | C0~C79 | D0~D399 |
| | ✓ | ✓ | ✓ | ✓ | ✓ | — |

Explanation: The LDI command is used for contact b starting at the left busbar or contact b starting at a contact circuit block; its function is to save current content and save the acquired contact status in the cumulative register.

Example: Ladder diagram:

| Command code: | | Description: |
|---|---|---|
| **LDI** | **X0** | Load Contact b of X0 |
| AND | X1 | Create series connection to contact a of X1 |
| OUT | Y1 | Drive Y1 coil |

| Command | Function | | | | | |
|---|---|---|---|---|---|---|
| **AND** | Connect contact a in series | | | | | |
| Operand | X0~X17 | Y0~Y17 | M0~M799 | T0~159 | C0~C79 | D0~D399 |
| | ✓ | ✓ | ✓ | ✓ | ✓ | — |

Explanation

The AND command is used to create a series connection to contact a; first reads current status of the designated series contact and logical operation results before contact in order to perform "AND" operation; saves results in cumulative register.

Example

Ladder diagram:

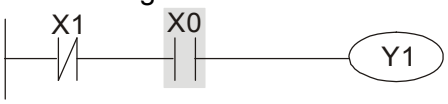


| Command code: | | Description: |
|---|---|---|
| LDI | X1 | Load Contact b of X1 |
| **AND** | **X0** | Create series connection to contact a of X0 |
| OUT | Y1 | Drive Y1 coil |

| Command | Function | | | | | |
|---|---|---|---|---|---|---|
| **ANI** | Connect contact b in series | | | | | |
| Operand | X0~X17 | Y0~Y17 | M0~M799 | T0~159 | C0~C79 | D0~D399 |
| | ✓ | ✓ | ✓ | ✓ | ✓ | — |

Explanation

The ANI command is used to create a series connection to contact b; its function is to first read current status of the designated series contact and logical operation results before contact in order to perform "AND" operation; saves results in cumulative register.

Example

Ladder diagram:

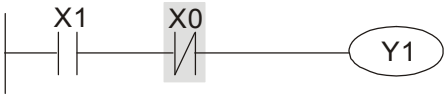


| Command code: | | Description: |
|---|---|---|
| LD | X1 | Load Contact a of X1 |
| **ANI** | **X0** | Create series connection to contact b of X0 |
| OUT | Y1 | Drive Y1 coil |

| Command | Function | | | | | |
|---|---|---|---|---|---|---|
| **OR** | Connect contact a in parallel | | | | | |
| Operand | X0~X17 | Y0~Y17 | M0~M799 | T0~159 | C0~C79 | D0~D399 |
| | ✓ | ✓ | ✓ | ✓ | ✓ | — |

Explanation

The OR command is used to establish a parallel connection to contact a; its function is to first read current status of the designated series contact and logical operation results before contact in order to perform "OR" operation; saves results in cumulative register.

Example

Ladder diagram:

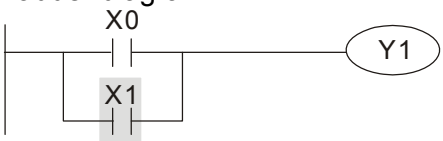


| Command code: | | Description: |
|---|---|---|
| LD | X0 | Load Contact a of X0 |
| **OR** | **X1** | Create series connection to contact a of X1 |
| OUT | Y1 | Drive Y1 coil |

| Command | Function |
|---|---|
| **ORI** | Connect contact b in parallel |

| Operand | X0~X17 | Y0~Y17 | M0~M799 | T0~159 | C0~C79 | D0~D399 |
|---|---|---|---|---|---|---|
| | ✓ | ✓ | ✓ | ✓ | ✓ | — |

Explanation

The ORI command is used to establish a parallel connection to contact a; its function is to first read current status of the designated series contact and logical operation results before contact in order to perform "OR" operation; saves results in cumulative register.

Example

Ladder diagram:

| Command code: | | Description: |
|---|---|---|
| LD | X0 | Load Contact a of X0 |
| **ORI** | **X1** | Create series connection to contact b of X1 |
| OUT | Y1 | Drive Y1 coil |

| Command | Function |
|---|---|
| **ANB** | Series circuit block |
| Operand | N/A |

Explanation

ANB performs an "AND" operation on the previously saved logic results and the current cumulative register content.

Example

Ladder diagram:

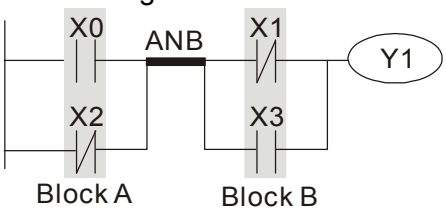


| Command code: | | Description: |
|---|---|---|
| LD | X0 | Load Contact a of X0 |
| ORI | X2 | Establish parallel connection to contact b of X2 |
| LDI | X1 | Load Contact b of X1 |
| OR | X3 | Establish parallel connection to contact a of X3 |
| **ANB** | | Series circuit block |
| OUT | Y1 | Drive Y1 coil |

| Command | Function |
|---|---|
| **ORB** | Parallel circuit block |
| Operand | N/A |

Explanation

ORB performs an "OR" operation on the previously saved logic results and the current cumulative register content.

Example

Ladder diagram:

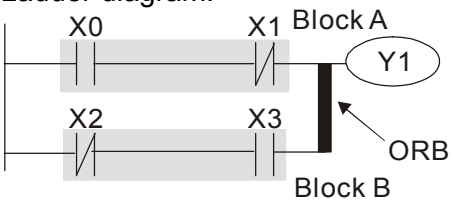


| Command code: | | Description: |
|---|---|---|
| LD | X0 | Load Contact a of X0 |
| ANI | X1 | Establish parallel connection to contact b of X1 |
| LDI | X2 | Load Contact b of X2 |
| AND | X3 | Establish parallel connection to contact a of X3 |
| **ORB** | | Parallel circuit block |
| OUT | Y1 | Drive Y1 coil |

| Command | Function |
|---|---|
| **MPS** | Save to stack |
| Operand | N/A |

Explanation: Save current content of cumulative register to the stack. (Add one to stack pointer)

| Command | Function |
|---|---|
| **MRD** | Read stack (pointer does not change) |
| Operand | N/A |

Explanation: Reads stack content and saves to cumulative register. (Stack pointer does not change)

| Command | Function |
|---|---|
| **MPP** | Read stack |
| Operand | N/A |

Explanation: Retrieves result of previously-save logical operation from the stack, and saves to cumulative register. (Subtract one from stack pointer)

Example: Ladder diagram:

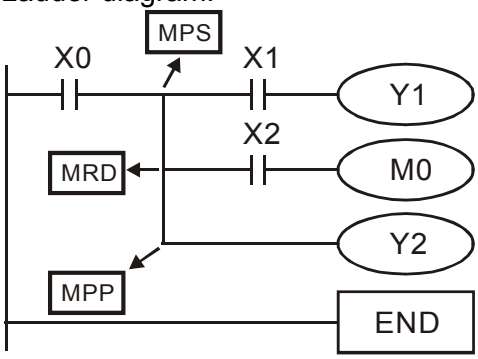


| Command code: | | Description: |
|---|---|---|
| LD | X0 | Load Contact a of X0 |
| **MPS** | | Save to stack |
| AND | X1 | Create series connection to contact a of X1 |
| OUT | Y1 | Drive Y1 coil |
| **MRD** | | Read stack (pointer does not change) |
| AND | X2 | Create series connection to contact a of X2 |
| OUT | M0 | Drive M0 coil |
| **MPP** | | Read stack |
| OUT | Y2 | Drive Y2 coil |
| END | | Program conclusion |

| Command | Function | | | | | |
|---|---|---|---|---|---|---|
| **OUT** | Drive coil | | | | | |
| Operand | X0~X17 | Y0~Y17 | M0~M799 | T0~159 | C0~C79 | D0~D399 |
| | — | ✓ | ✓ | — | — | — |

Explanation: Outputs result of logical operation before OUT command to the designated element.
Coil contact action:

| Result: | Out command | | |
|---|---|---|---|
| | Coil | Access Point: | |
| | | Contact a (NO) | Contact b (NC) |
| FALSE | Off | Not conducting | Conducting |
| TRUE | On | Conducting | Not conducting |
| | | | |

Example: Ladder diagram:

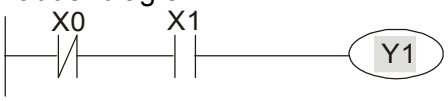


| Command code: | | Description: |
|---|---|---|
| LD | X0 | Load Contact b of X0 |
| AND | X1 | Establish parallel connection to contact a of X1 |
| **OUT** | **Y1** | Drive Y1 coil |

| Command | Function | | | | | |
|---|---|---|---|---|---|---|
| **SET** | Action continues (ON) | | | | | |
| Operand | X0~X17 | Y0~Y17 | M0~M799 | T0~159 | C0~C79 | D0~D399 |
| | — | ✓ | ✓ | — | — | — |

Explanation

When the SET command is driven, the designated element will be set as On, and will be maintained in an On state, regardless of whether the SET command is still driven. The RST command can be used to set the element as Off.

Example

Ladder diagram:

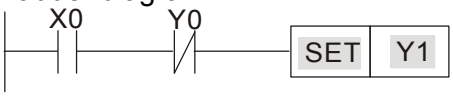


| Command code: | | Description: |
|---|---|---|
| LD | X0 | Load Contact a of X0 |
| AN | Y0 | Establish parallel connection to contact b of Y0 |
| **SET** | **Y1** | Action continues (ON) |

| Command | Function | | | | | |
|---|---|---|---|---|---|---|
| **RST** | Clear contact or register | | | | | |
| Operand | X0~X17 | Y0~Y17 | M0~M799 | T0~159 | C0~C79 | D0~D399 |
| | — | ✓ | ✓ | ✓ | ✓ | ✓ |

Explanation

When the RST command is driven, the action of the designated element will be as follows:

| Element | Mode |
|---|---|
| Y, M | Both coil and contact will be set as Off. |
| T, C | The current timing or count value will be set as 0, and both the coil and contact ill be set as Off. |
| D | The content value will be set as 0. |

If the RST command has not been executed, the status of the designated element will remain unchanged.

Example

Ladder diagram:

| Command code: | | Description: |
|---|---|---|
| LD | X0 | Load Contact a of X0 |
| **RST** | **Y5** | Clear contact or register |

| Command | Function | |
|---|---|---|
| **TMR** | 16-bit timer | |
| Operand | T-K | T0~T159，K0~K32,767 |
| | T-D | T0~T159，D0~D399 |

Explanation

When the TMR command is executed, the designated timer coil will be electrified, and the timer will begin timing. The contact's action will be as follows when the timing value reaches the designated set value (timing value >= set value):

| | |
|---|---|
| NO (Normally Open) contact | Closed |
| NC (Normally Close) contact | Open |

If the RST command has not been executed, the status of the designated element will remain unchanged.

Example

Ladder diagram:

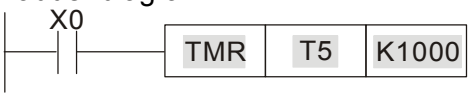


| Command code: | | Description: |
|---|---|---|
| LD | X0 | Load Contact a of X0 |
| **TMR** | T5 K1000 | T5 timer<br>Set value as K1000 |

| Command | Function | |
|---|---|---|
| **CNT** | 16-bit counter | |
| Operand | C-K | C0~C79，K0~K32,767 |
| | C-D | C0~C79，D0~D399 |

Explanation

When the CNT command is executed from Off→On, this indicates that the designated counter coil goes from no power → electrified, and 1 will be added to the counter's count value; when the count reaches the designated value (count value = set value), the contact will have the following action:

| | |
|---|---|
| NO (Normally Open) contact | Closed |
| NC (Normally Close) contact | Open |

After the count value has been reached, the contact and count value will both remain unchanged even if there is continued count pulse input. Please use the RST command if you wish to restart or clear the count.

Example

Ladder diagram:

Command code: Description:

| | | |
|---|---|---|
| LD | X0 | Load Contact a of X0 |
| **CNT** | **C2 K100** | C2counter<br>Set value as K100 |

| Command | Function |
|---|---|
| **MC/MCR** | Connect/release a common series contact |
| Operand | N0~N7 |

Explanation

MC is the main control initiation command, and any commands between MC and MCR will be executed normally. When the MC command is Off, any commands between MC and MCR will act as follows:

| Determination of commands | Description |
|---|---|
| Ordinary timer | The timing value will revert to 0, the coil will lose power, and the contact will not operate |
| Counter | The coil will lose power, and the count value and contact will stay in their current state |
| Coil driven by OUT command | None receive power |
| Elements driven by SET, RST commands | Will remain in their current state |
| Applications commands | None are actuated |

MCR is the main control stop command, and is placed at the end of the main control program. There may not be any contact commands before the MCR command.
The MC-MCR main control program commands support a nested program structure with a maximum only 8 levels; use in the order N0-N7, please refer to the following program:

Example

Ladder diagram:

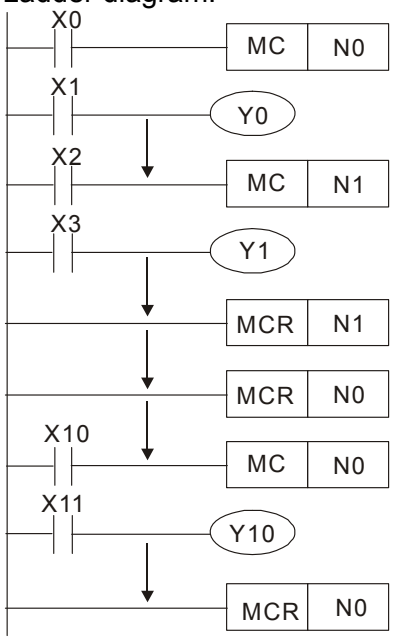


| Command code: | | Description: |
|---|---|---|
| LD | X0 | Load Contact a of X0 |
| **MC** | **N0** | Connection of N0 common series contact |
| LD | X1 | Load Contact a of X1 |
| OUT | Y0 | Drive Y0 coil |
| : | | |
| LD | X2 | Load Contact a of X2 |
| **MC** | **N1** | Connection of N1 common series contact |
| LD | X3 | Load Contact a of X3 |
| OUT | Y1 | Drive Y1 coil |
| : | | |
| **MCR** | **N1** | Release N1 common series contact |
| : | | |
| **MCR** | **N0** | Release N0 common series contact |
| : | | |
| LD | X10 | Load Contact a of X10 |
| MC | **N0** | Connection of N0 common series contact |
| LD | X11 | Load Contact a of X11 |
| OUT | Y10 | Drive Y10 coil |
| : | | |
| **MCR** | **N0** | Release N0 common series contact |

| Command | Function | | | | | |
|---|---|---|---|---|---|---|
| **LDP** | Start of forward edge detection action | | | | | |
| Operand | X0~X17 | Y0~Y17 | M0~M799 | T0~159 | C0~C79 | D0~D399 |
| | ✓ | ✓ | ✓ | ✓ | ✓ | — |

Explanation

The LDP command has the same usage as LD, but its action is different; its function is to save current content, while also saving the detected state of the rising edge of the contact to the cumulative register.

Example

Ladder diagram:

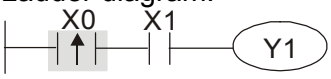


| Command code: | | Description: |
|---|---|---|
| **LDP** | **X0** | Start of X0 forward edge detection action |
| **AND** | X1 | Create series connection to contact a of X1 |
| OUT | Y1 | Drive Y1 coil |

Remark

Please refer to the function specifications table for each device in series for the scope of usage of each operand.
A rising edge contact will be TRUE after power is turned on if the rising edge contact is On before power is turned on to the PLC.

| Command | Function | | | | | |
|---|---|---|---|---|---|---|
| **LDF** | Start of reverse edge detection action | | | | | |
| Operand | X0~X17 | Y0~Y17 | M0~M799 | T0~159 | C0~C79 | D0~D399 |
| | ✓ | ✓ | ✓ | ✓ | ✓ | — |

Explanation

The LDF command has the same usage as LD, but its action is different; its function is to save current content while also saving the detected state of the falling edge of the contact to the cumulative register.

Example

Ladder diagram:

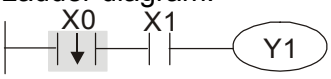


| Command code: | | Description: |
|---|---|---|
| **LDF** | **X0** | Start of X0 reverse edge detection action |
| **AND** | X1 | Create series connection to contact a of X1 |
| OUT | Y1 | Drive Y1 coil |

| Command | Function | | | | | |
|---|---|---|---|---|---|---|
| **ANDP** | Forward edge detection series connection | | | | | |
| Operand | X0~X17 | Y0~Y17 | M0~M799 | T0~159 | C0~C79 | D0~D399 |
| | ✓ | ✓ | ✓ | ✓ | ✓ | — |

Explanation

The ANDP command used for a contact rising edge detection series connection.

Example

Ladder diagram:

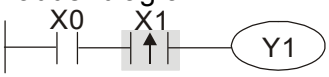


| Command code: | | Description: |
|---|---|---|
| LD | X0 | Load Contact a of X0 |
| ANDP | **X1** | X1 Forward edge detection series connection |
| OUT | Y1 | Drive Y1 coil |

| Command | Function | | | | | |
|---|---|---|---|---|---|---|
| **ANDF** | Reverse edge detection series connection | | | | | |
| Operand | X0~X17 | Y0~Y17 | M0~M799 | T0~159 | C0~C79 | D0~D399 |
| | ✓ | ✓ | ✓ | ✓ | ✓ | — |

Explanation: The ANDF command is used for a contact falling edge detection series connection.

Example: Ladder diagram:

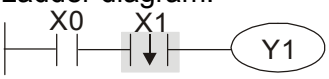


| Command code: | | Description: |
|---|---|---|
| LD | X0 | Load Contact a of X0 |
| ANDF | **X1** | X1 Reverse edge detection series connection |
| OUT | Y1 | Drive Y1 coil |

| Command | Function | | | | | |
|---|---|---|---|---|---|---|
| **ORP** | Forward edge detection parallel connection | | | | | |
| Operand | X0~X17 | Y0~Y17 | M0~M799 | T0~159 | C0~C79 | D0~D399 |
| | ✓ | ✓ | ✓ | ✓ | ✓ | — |

Explanation: The ORP command is used for a contact rising edge detection parallel connection.

Example: Ladder diagram:

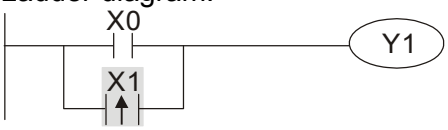


| Command code: | | Description: |
|---|---|---|
| LD | X0 | Load Contact a of X0 |
| ORP | **X1** | X1 Forward edge detection parallel connection |
| OUT | Y1 | Drive Y1 coil |

| Command | Function | | | | | |
|---|---|---|---|---|---|---|
| **ORF** | Reverse edge detection parallel connection | | | | | |
| Operand | X0~X17 | Y0~Y17 | M0~M799 | T0~159 | C0~C79 | D0~D399 |
| | ✓ | ✓ | ✓ | ✓ | ✓ | — |

Explanation: The ORF command is used for contact falling edge detection parallel connection.

Example: Ladder diagram:

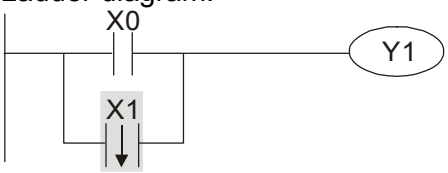


| Command code: | | Description: |
|---|---|---|
| LD | X0 | Load Contact a of X0 |
| ORF | **X1** | X1 Reverse edge detection parallel connection |
| OUT | Y1 | Drive Y1 coil |

| Command | Function | | | | | |
|---|---|---|---|---|---|---|
| **PLS** | Upper differential output | | | | | |
| Operand | X0~X17 | Y0~Y17 | M0~M799 | T0~159 | C0~C79 | D0~D399 |
| | — | ✓ | ✓ | — | — | — |

Explanation

Upper differential output commands. When X0=Off→On (positive edge-triggered), the PLS command will be executed, and M0 will send one pulse, with a pulse length consisting of one scanning period.

Example

Ladder diagram:

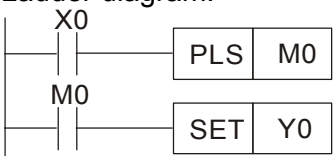


Time sequence diagram:

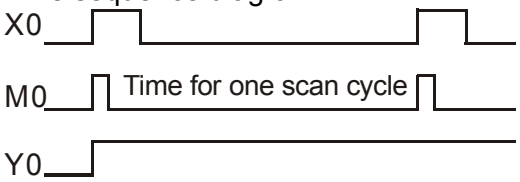


| Command code: | | Description: |
|---|---|---|
| LD | X0 | Load Contact a of X0 |
| PLS | **M0** | M0 Upper differential output |
| LD | M0 | Load Contact a of M0 |
| SET | Y0 | Y0 Action continues (ON) |

| Command | Function | | | | | |
|---|---|---|---|---|---|---|
| **PLF** | Lower differential output | | | | | |
| Operand | X0~X17 | Y0~Y17 | M0~M799 | T0~159 | C0~C79 | D0~D399 |
| | — | ✓ | ✓ | — | — | — |

Explanation

Lower differential output command. When X0= On→Off (negative edge-triggered), the PLF command will be executed, and M0 will send one pulse, with pulse length consisting of one scanning period.

Example

Ladder diagram:

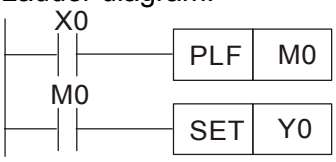


Time sequence diagram:

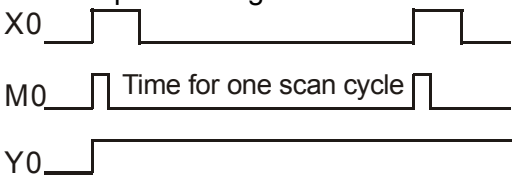


| Command code: | | Description: |
|---|---|---|
| LD | X0 | Load Contact a of X0 |
| PLF | **M0** | M0 Lower differential output |
| LD | M0 | Load Contact a of M0 |
| SET | Y0 | Y0 Action continues (ON) |

| Command | Function |
|---|---|
| **END** | Program conclusion |
| Operand | N/A |

Explanation

An END command must be added to the end of a ladder diagram program or command program. The PLC will scan from address 0 to the END command, and will return to address 0 and begins scanning again after execution.

| Command | Function |
|---|---|
| **NOP** | No action |
| Operand | N/A |

Explanation: The command NOP does not perform any operation in the program. Because execution of this command will retain the original logical operation results, it can be used in the following situation: the NOP command can be used instead of a command that is deleted without changing the program length.

Example

Ladder diagram:

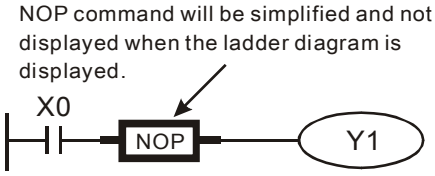


| Command code: | | Description: |
|---|---|---|
| LD | X0 | Load Contact b of X0 |
| NOP | | No action |
| OUT | Y1 | Drive Y1 coil |

| Command | Function |
|---|---|
| **INV** | Inverse of operation results |
| Operand | N/A |

Explanation: Saves the result of the logic inversion operation prior to the INV command in the cumulative register.

Example

Ladder diagram:

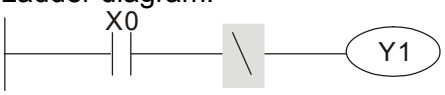


| Command code: | | Description: |
|---|---|---|
| LD | X0 | Load Contact a of X0 |
| **INV** | | Inverse of operation results |
| OUT | Y1 | Drive Y1 coil |

| Command | Function |
|---|---|
| **P** | Index |
| Operand | P0~P255 |

Explanation: Pointer P is used to subprogram call command API 01 CALL. Use does not require starting from zero, but the number cannot be used repeatedly, otherwise an unpredictable error will occur.

Example

Ladder diagram:

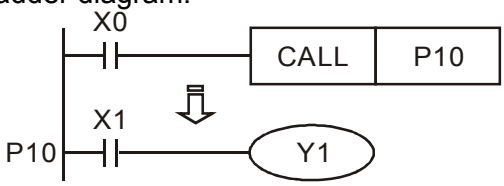


| Command code: | | Description: |
|---|---|---|
| LD | X0 | Load Contact a of X0 |
| CALL | P10 | Call command CALL to P10 |
| : | | |
| **P10** | | Pointer P10 |
| LD | X1 | Load Contact a of X1 |
| OUT | Y1 | Drive Y1 coil |

# 16-6-3 Overview of application commands

| Classification | API | Command code | | P command | Function | STEPS | |
|---|---|---|---|---|---|---|---|
| | | 16 bit | 32 bit | | | 16bit | 32bit |
| Circuit control | 01 | CALL | - | ✓ | Call subprogram | 3 | - |
| | 02 | SRET | - | - | Conclusion of subprogram | 1 | - |
| | 06 | FEND | - | - | Conclusion a main program | 1 | - |
| Send comparison | 10 | CMP | DCMP | ✓ | Compares set output | 7 | 13 |
| | 11 | ZCP | DZCP | ✓ | Range comparison | 9 | 17 |
| | 12 | MOV | DMOV | ✓ | Data movement | 5 | 9 |
| | 15 | BMOV | – | ✓ | Send all | 7 | – |
| Four logical operations | 20 | ADD | DADD | ✓ | BIN addition | 7 | 13 |
| | 21 | SUB | DSUB | ✓ | BIN subtraction | 7 | 13 |
| | 22 | MUL | DMUL | ✓ | BIN multiplication | 7 | 13 |
| | 23 | DIV | DDIV | ✓ | BIN division | 7 | 13 |
| | 24 | INC | DINC | ✓ | BIN add one | 3 | 5 |
| | 25 | DEC | DDEC | ✓ | BIN subtract one | 3 | 5 |
| Rotational displacement | 30 | ROR | DROR | ✓ | Right rotation | 5 | – |
| | 31 | ROL | DROL | ✓ | Left rotation | 5 | – |
| Data Process | 40 | ZRST | – | ✓ | Clear range | 5 | - |
| | 49 | – | DFLT | ✓ | BIN whole number → binary floating point number transformation | - | 9 |
| communication | 150 | MODRW | – | ✓ | MODBUS read/write | 7 | – |
| Floating point operation | 110 | – | DECMP | ✓ | Comparison of binary floating point numbers | – | 13 |
| | 111 | – | DEZCP | ✓ | Comparison of binary floating point number range | – | 17 |
| | 116 | – | DRAD | ✓ | Angle → Radian | – | 9 |
| | 117 | – | DDEG | ✓ | Radian → Angle | – | 9 |
| | 120 | – | DEADD | ✓ | Binary floating point number addition | – | 13 |
| | 121 | – | DESUB | ✓ | Binary floating point number subtraction | – | 13 |
| | 122 | – | DEMUL | ✓ | Binary floating point number multiplication | – | 13 |
| | 123 | – | DEDIV | ✓ | Binary floating point number division | – | 13 |
| | 124 | – | DEXP | ✓ | Binary floating point number obtain exponent | – | 9 |
| | 125 | – | DLN | ✓ | Binary floating point number obtain logarithm | – | 9 |
| | 127 | – | DESQR | ✓ | Binary floating point number find square root | – | 9 |
| | 129 | – | DINT | ✓ | Binary floating point number → BIN whole number transformation | – | 9 |
| | 130 | – | DSIN | ✓ | Binary floating point number SIN operation | – | 9 |
| | 131 | – | DCOS | ✓ | Binary floating point number COS operation | – | 9 |
| | 132 | – | DTAN | ✓ | Binary floating point number TAN operation | – | 9 |
| | 133 | – | DASIN | ✓ | Binary floating point number ASIN operation | – | 9 |
| | 134 | – | DACOS | ✓ | Binary floating point number ACOS operation | – | 9 |

| Classification | API | Command code | | P command | Function | STEPS | |
|---|---|---|---|---|---|---|---|
| | | 16 bit | 32 bit | | | 16bit | 32bit |
| | 135 | – | DATAN | ✓ | Binary floating point number ATAN operation | – | 9 |
| Floating point operation | 136 | – | DSINH | ✓ | Binary floating point number SINH operation | – | 9 |
| | 137 | – | DCOSH | ✓ | Binary floating point number COSH operation | – | 9 |
| | 138 | – | DTANH | ✓ | Binary floating point number TANH operation | – | 9 |
| Calendar | 160 | TCMP | – | ✓ | Compare calendar data | 11 | – |
| | 161 | TZCP | – | ✓ | Compare calendar data range | 9 | – |
| | 162 | TADD | – | ✓ | Calendar data addition | 7 | – |
| | 163 | TSUB | – | ✓ | Calendar data subtraction | 7 | – |
| | 166 | TRD | – | ✓ | Calendar data read | 3 | – |
| GRAY code | 170 | GRY | DGRY | ✓ | BIN→GRY code transformation | 5 | 9 |
| | 171 | GBIN | DGBIN | ✓ | GRY code →BIN transformation | 5 | 9 |
| Contact form logical operation | 215 | LD& | DLD& | - | Contact form logical operation LD# | 5 | 9 |
| | 216 | LD\| | DLD\| | - | Contact form logical operation LD# | 5 | 9 |
| | 217 | LD^ | DLD^ | - | Contact form logical operation LD# | 5 | 9 |
| | 218 | AND& | DAND& | - | Contact form logical operation AND# | 5 | 9 |
| | 219 | AND\| | DAND\| | - | Contact form logical operation AND# | 5 | 9 |
| | 220 | AND^ | DAND^ | - | Contact form logical operation AND# | 5 | 9 |
| | 221 | OR& | DOR& | - | Contact form logical operation OR# | 5 | 9 |
| | 222 | OR\| | DOR\| | - | Contact form logical operation OR# | 5 | 9 |
| | 223 | OR^ | DOR^ | - | Contact form logical operation OR# | 5 | 9 |
| Contact form compare command | 224 | LD＝ | DLD＝ | - | Contact form compare LD※ | 5 | 9 |
| | 225 | LD＞ | DLD＞ | - | Contact form compare LD※ | 5 | 9 |
| | 226 | LD＜ | DLD＜ | - | Contact form compare LD※ | 5 | 9 |
| | 228 | LD＜＞ | DLD＜＞ | - | Contact form compare LD※ | 5 | 9 |
| | 229 | LD＜＝ | DLD＜＝ | - | Contact form compare LD※ | 5 | 9 |
| | 230 | LD＞＝ | DLD＞＝ | - | Contact form compare LD※ | 5 | 9 |
| | 232 | AND＝ | DAND＝ | - | Contact form compare AND※ | 5 | 9 |
| | 233 | AND＞ | DAND＞ | - | Contact form compare AND※ | 5 | 9 |
| | 234 | AND＜ | DAND＜ | - | Contact form compare AND※ | 5 | 9 |
| | 236 | AND＜＞ | DAND＜＞ | - | Contact form compare AND※ | 5 | 9 |
| | 237 | AND＜＝ | DAND＜＝ | - | Contact form compare AND※ | 5 | 9 |
| | 238 | AND＞＝ | DAND＞＝ | - | Contact form compare AND※ | 5 | 9 |
| | 240 | OR＝ | DOR＝ | - | Contact form compare OR※ | 5 | 9 |
| | 241 | OR＞ | DOR＞ | - | Contact form compare OR※ | 5 | 9 |
| | 242 | OR＜ | DOR＜ | - | Contact form compare OR※ | 5 | 9 |
| | 244 | OR＜＞ | DOR＜＞ | - | Contact form compare OR※ | 5 | 9 |
| | 245 | OR＜＝ | DOR＜＝ | - | Contact form compare OR※ | 5 | 9 |
| | 246 | OR＞＝ | DOR＞＝ | - | Contact form compare OR※ | 5 | 9 |

| Classification | API | Command code | | P command | Function | STEPS | |
|---|---|---|---|---|---|---|---|
| | | 16 bit | 32 bit | | | 16bit | 32bit |
| Floating point contact form | 275 | - | FLD＝ | - | Floating point number contact form compare LD※ | - | 9 |
| | 276 | - | FLD＞ | - | Floating point number contact form compare LD※ | - | 9 |
| | 277 | - | FLD＜ | - | Floating point number contact form compare LD※ | - | 9 |
| Compare command | 278 | - | FLD＜＞ | - | Floating point number contact form compare LD※ | - | 9 |
| | 279 | - | FLD＜＝ | - | Floating point number contact form compare LD※ | - | 9 |
| | 280 | - | FLD＞＝ | - | Floating point number contact form compare LD※ | - | 9 |
| | 281 | - | FAND＝ | - | Floating point number contact form compare AND※ | - | 9 |
| | 282 | - | FAND＞ | - | Floating point number contact form compare AND※ | - | 9 |
| | 283 | - | FAND＜ | - | Floating point number contact form compare AND※ | - | 9 |
| | 284 | - | FAND＜＞ | - | Floating point number contact form compare AND※ | - | 9 |
| | 285 | - | FAND＜＝ | - | Floating point number contact form compare AND※ | - | 9 |
| | 286 | - | FAND＞＝ | - | Floating point number contact form compare AND※ | - | 9 |
| | 287 | - | FOR＝ | - | Floating point number contact form compare OR※ | - | 9 |
| | 288 | - | FOR＞ | - | Floating point number contact form compare OR※ | - | 9 |
| | 289 | - | FOR＜ | - | Floating point number contact form compare OR※ | - | 9 |
| | 290 | - | FOR＜＞ | - | Floating point number contact form compare OR※ | - | 9 |
| | 291 | - | FOR＜＝ | - | Floating point number contact form compare OR※ | - | 9 |
| | 292 | - | FOR＞＝ | - | Floating point number contact form compare OR※ | - | 9 |
| Driver special command | 139 | RPR | – | ✓ | Read servo parameter | 5 | – |
| | 140 | WPR | – | ✓ | Write servo parameter | 5 | – |
| | 141 | FPID | – | ✓ | Driver PID control mode | 9 | – |
| | 142 | FREQ | – | ✓ | Driver torque control mode | 7 | – |
| | | | | | | | |
| | | | | | | | |
| | 261 | CANRX | – | ✓ | Read CANopen slave station data | 9 | - |
| | 264 | CANTX | – | ✓ | Write CANopen slave station data | 9 | - |
| | 265 | CANFLS | – | ✓ | Refresh special D corresponding to CANopen | 3 | - |
| | 320 | ICOMR | DICOMR | ✓ | Internal communications read | 9 | 17 |
| | 321 | ICOMW | DICOMW | ✓ | Internal communications write | 9 | 17 |

# 16-6-4 Detailed explanation of applications commands

| API 01 | | **CALL** | P | S | Call subprogram |
|---|---|---|---|---|---|

| Bit device | | | Word device | | | | | | | |
|---|---|---|---|---|---|---|---|---|---|---|
| X | Y | M | K | H | KnX | KnY | KnM | T | C | D |

Notes on operand usage:
The S operand can designate P
CP2000 series device: The S operand can designate P0-P63

| 16-bit command (3 STEP) | | | |
|---|---|---|---|
| CALL | Continuous execution type | CALLP | Pulse execution type |
| **32-bit command** | | | |
| — | — | — | — |

Flag signal: none

Explanation

- **S**：Call subprogram pointer.
- Write the subprogram after the FEND command.
- The subprogram must end after the SRET command.
- Refer to the FEND command explanation and sample content for detailed command functions.

| API 02 | | **SRET** | P | – | Conclusion of subprogram |
|---|---|---|---|---|---|

| Bit device | | | Word device | | | | | | | |
|---|---|---|---|---|---|---|---|---|---|---|
| X | Y | M | K | H | KnX | KnY | KnM | T | C | D |

Notes on operand usage:
No operand
A contact-driven command is not needed

| 16-bit command (1 STEP) | | | |
|---|---|---|---|
| FEND | Continuous execution type | — | — |
| **32-bit command** | | | |
| — | — | — | — |

Flag signal: none

Explanation

- A contact-driven command is not needed. Automatically returns next command after CALL command
- Indicates end of subprogram. After end of subprogram, SRET returns to main program, and executes next command after the original call subprogram CALL command.
- Refer to the FEND command explanation and sample content for detailed command functions.

| API 06 | | **FEND** | | – | Conclusion a main program |
|---|---|---|---|---|---|

| | Bit device | | | Word device | | | | | | | |
|---|---|---|---|---|---|---|---|---|---|---|---|
| | X | Y | M | K | H | KnX | KnY | KnM | T | C | D |

Notes on operand usage:
No operand
A contact-driven command is not needed

16-bit command (1 STEP)

| FEND | Continuous execution type | – | – |
|---|---|---|---|

32-bit command

| – | – | – | – |
|---|---|---|---|

Flag signal: none

Explanation

- This command indicates the end of the main program. It is the same as the END command when the PLC executes this command.
- The CALL command program must be written after the FEND command, and the SRET command added to the end of the subprogram.
- When using the FEND command, an END command is also needed. However, the END command must be placed at the end, after the main program and subprogram.

CALL command process

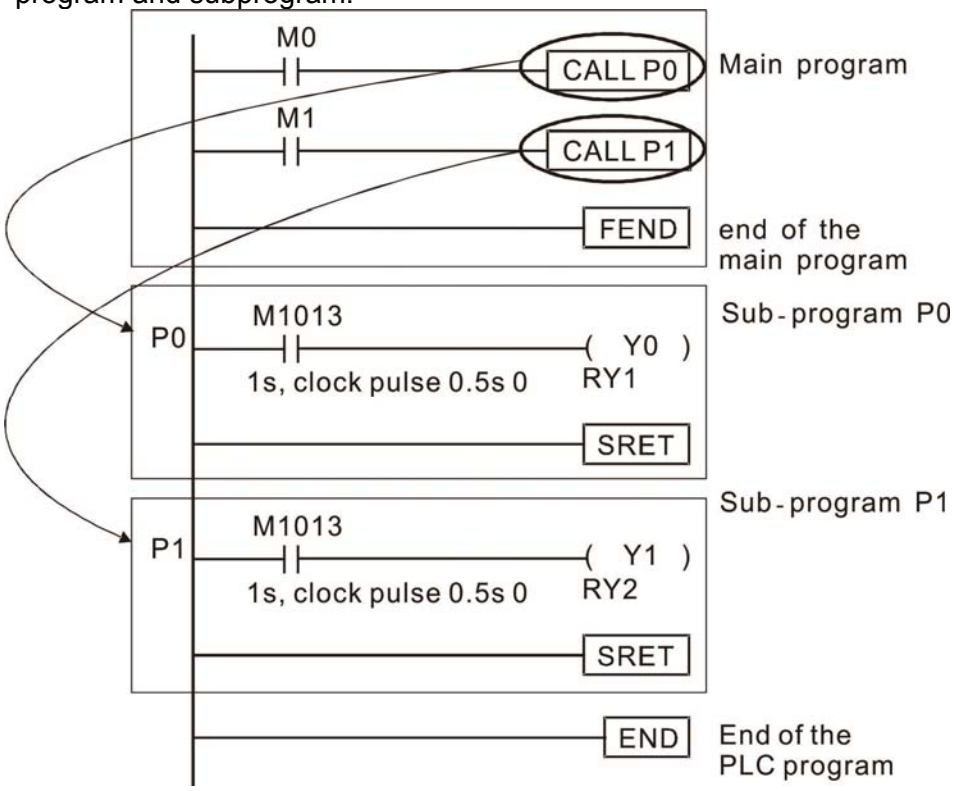

| API 10 | D | **CMP** | P | (S1) (S2) (D) | Compares set output |
|---|---|---|---|---|---|

| | Bit device | | | Word device | | | | | | | |
|---|---|---|---|---|---|---|---|---|---|---|---|
| | X | Y | M | K | H | KnX | KnY | KnM | T | C | D |
| S1 | | | | * | * | * | * | * | * | * | * |
| S2 | | | | * | * | * | * | * | * | * | * |
| D | | * | * | | | | | | | | |

Notes on operand usage:
The operand D occupies three consecutive points

16-bit command (7 STEP)

| CMP | Continuous execution type | CMPP | Pulse execution type |
|---|---|---|---|

32-bit command (13 STEP)

| DCMP | Continuous execution type | DCMPP | Pulse execution type |
|---|---|---|---|

Flag signal: none

**Explanation**

- (S1): Compare value 1. (S2): Compare value 2. (D): Results of comparison.
- Compares the size of the content of operand (S1) and (S2); the results of comparison are expressed in (D).
- Size comparison is performed algebraically. All data is compared in the form of numerical binary values. Because this is a 16-bit command, when b15 is 1, this indicates a negative number.

**Example**

- When the designated device is Y0, it automatically occupies Y0, Y1 and Y2.
- When X10=On, the CMP command executes, and Y0, Y1 or Y2 will be On. When X10=Off, the CMP command will not execute, and the state of Y0, Y1 and Y2 will remain in the state prior to X10=Off.
- If ≥, ≤, or ≠ results are needed, they can be obtained via series/parallel connections of Y0-Y2.

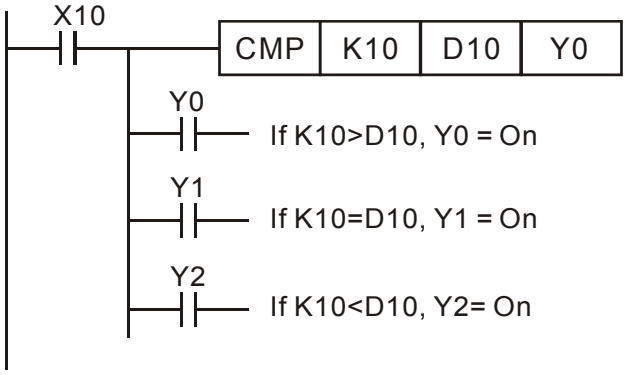


- To clear results of comparison, use the RST or ZRST command.

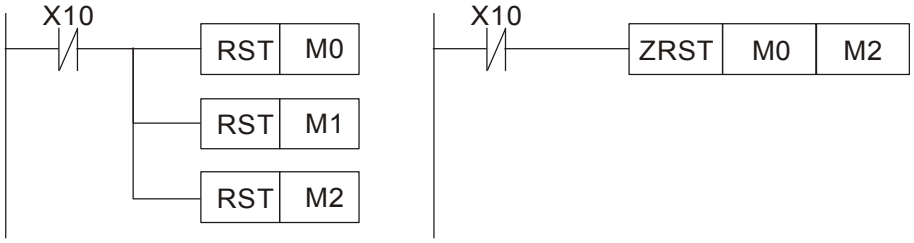

| API 11 | D | **ZCP** | P | (S1) (S2) (S) (D) | Range comparison |
|---|---|---|---|---|---|

| | Bit device | | | Word device | | | | | | | |
|---|---|---|---|---|---|---|---|---|---|---|---|
| | X | Y | M | K | H | KnX | KnY | KnM | T | C | D |
| S1 | | | | * | * | * | * | * | * | * | * |
| S2 | | | | * | * | * | * | * | * | * | * |
| S | | | | * | * | * | * | * | * | * | * |
| D | | * | * | | | | | | | | |

Notes on operand usage:
The content value of operand S1 is less than the content value of S2 operand
The operand D occupies three consecutive points

16-bit command (9 STEP)

| ZCP | Continuous execution type | ZCPP | Pulse execution type |
|---|---|---|---|

32-bit command (17 STEP)

| DZCP | Continuous execution type | DZCPP | Pulse execution type |
|---|---|---|---|

Flag signal: none

**Explanation**

- (S1): Lower limit of range comparison. (S2): Upper limit of range comparison. (S) : Comparative value. (D): Results of comparison.
- When the comparative value (S) is compared with the lower limit (S1) and upper limit (S2), the results of comparison are expressed in (D).
- When lower limit (S1) > upper limit (S2), the command will use the lower limit (S1) to perform comparison with the upper and lower limit.
- Size comparison is performed algebraically. All data is compared in the form of numerical binary values. Because this is a 16-bit command, when b15 is 1, this indicates a negative number.

**Example**

- When the designated device is M0, it automatically occupies M0, M1 and M2.
- When X0=On, the ZCP command executes, and M0, M1 or M2 will be On. When X0=Off, the ZCP command will not execute, and the state of M0, M1 or M2 will remain in the state prior to X0=Off.
- If ≥, ≤, or ≠ results are needed, they can be obtained via series/parallel connections of M0-M2.

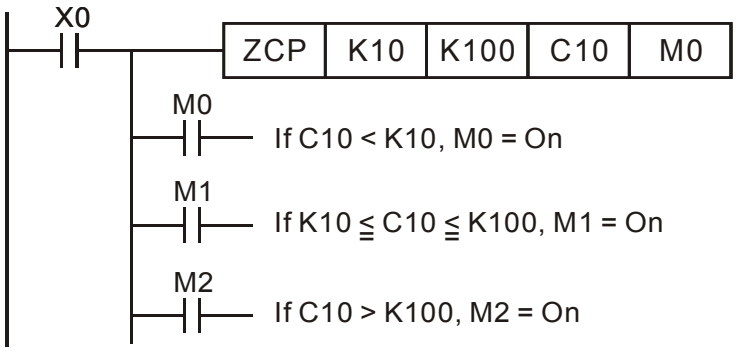


- To clear results of comparison, use the RST or ZRST command.

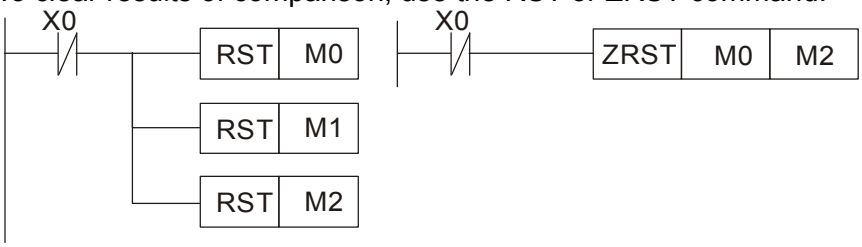

| API 12 | D | **MOV** | P | (S) (D) | Data movement |
|---|---|---|---|---|---|

| | Bit device | | | Word device | | | | | | | |
|---|---|---|---|---|---|---|---|---|---|---|---|
| | X | Y | M | K | H | KnX | KnY | KnM | T | C | D |
| S | | | | * | * | * | * | * | * | * | * |
| D | | | | | | | * | * | * | * | * |

Notes on operand usage: none

16-bit command (5 STEP)

| MOV | Continuous execution type | MOVP | Pulse execution type |
|---|---|---|---|

32-bit command (9 STEP)

| DMOV | Continuous execution type | DMOVP | Pulse execution type |
|---|---|---|---|

Flag signal:

**Explanation**

- (S): Data source. (D): Destination of data movement.
- When this command is executed, the content of (S) content will be directly moved to (D). When the command is not executed, the content of (D) will not change.

**Example**

- When X0=Off, the content of D10 will not change; if X0=On, the value K10 will be sent to data register D10.
- When X1=Off, the content of D10 will not change; if X1=On, the current value of T0 will be sent to data register D10.

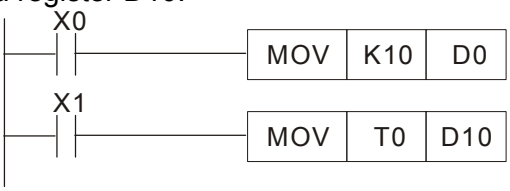

| API 15 | | **BMOV** | P | (S) (D) (n) | Send all |
|---|---|---|---|---|---|

| | Bit device | | | Word device | | | | | | | |
|---|---|---|---|---|---|---|---|---|---|---|---|
| | X | Y | M | K | H | KnX | KnY | KnM | T | C | D |
| S | | | | | | * | * | * | * | * | * |
| D | | | | | | | * | * | * | * | * |
| n | | | | * | * | | | | * | * | |

Notes on operand usage:
n operand scope n = 1 to 512

| 16-bit command (7 STEP) | | | |
|---|---|---|---|
| BMOV | Continuous execution type | BMOVP | Pulse execution type |
| 32-bit command | | | |
| – | – | – | – |

Flag signal: none

**Explanation**

- (S): Initiate source device. (D): Initiate destination device. (n): Send block length.
- The content of n registers starting from the initial number of the device designated by (S) will be sent to the n registers starting from the initial number of the device designated by (n); if the number of points referred to by n exceeds the range used by that device, only points within the valid range will be sent.

**Example 1**

- When X10=On, the content of registers D0-D3 will be sent to the four registers D20 to D23.

**Example 2**

- If the designated bit devices KnX, KnY, and KnM are sent, (S) and (D) must have the same number of nibbles, which implies that n must be identical.

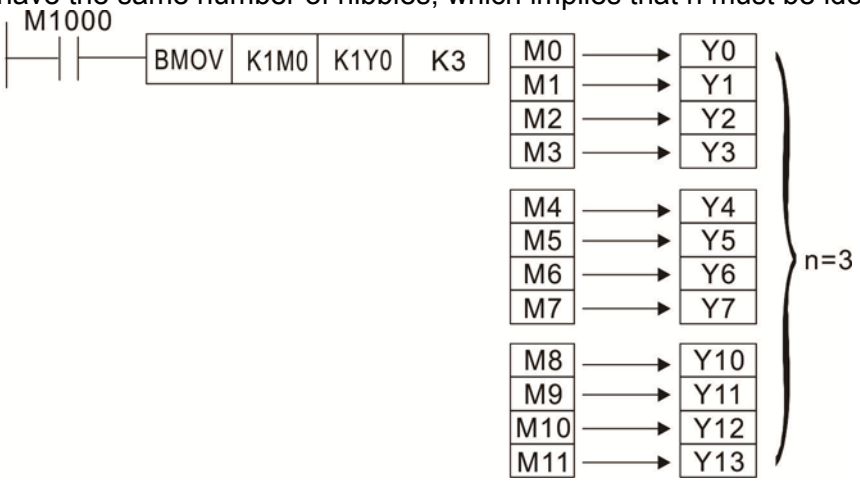


**Example 3**

- In order to prevent overlap between the transmission addresses of two operands, which would cause confusion, make sure that the addresses designated by the two operands have different sizes, as shown below:

When (S) > (D), send in the order ①→② →③.

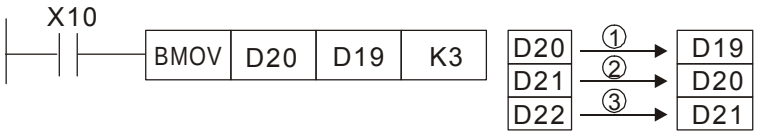


When (S) < (D), send in the order ③→② →①.

| API 20 | D | **ADD** | P | (S1) (S2) (D) | BIN addition |
|---|---|---|---|---|---|

| | Bit device | | | Word device | | | | | | | |
|---|---|---|---|---|---|---|---|---|---|---|---|
| | X | Y | M | K | H | KnX | KnY | KnM | T | C | D |
| S1 | | | | * | * | * | * | * | * | * | * |
| S2 | | | | * | * | * | * | * | * | * | * |
| D | | | | | | | * | * | * | * | * |

Notes on operand usage: none

16-bit command (7 STEP)

| ADD | Continuous execution type | ADDP | Pulse execution type |
|---|---|---|---|

32-bit command (13 STEP)

| DADD | Continuous execution type | DADDP | Pulse execution type |
|---|---|---|---|

Flag signal: M1020 Zero flag
M1021 Borrow flag
M1022 Carry flag
Please refer to the following supplementary explanation

**Explanation**

- (S1): Augend. (S2): Addend. (D): Sum.
- Using two data sources: The result of adding (S1) and (S2) using the BIN method will be stored in (D).
- The highest bit of any data is symbolized as bit 0 indicating (positive) 1 indicating (negative), enabling the use of algebraic addition operations. (for instance: 3+(-9)=-6)
- Flag changes connected with the addition.

1. When calculation results are 0, the zero flag M1020 will be On.
2. When calculation results are less than –32,768, the borrow flag M1021 will be On.
3. When calculation results are greater than 32,767, the carry flag M1022 will be On.

**Example**

- 16-bit BIN addition: When X0=On, the result of the content of addend D0 plus the content of augend D10 will exist in the content of D20.

**Remark**

- Relationship between flag actions and negative/positive numbers:

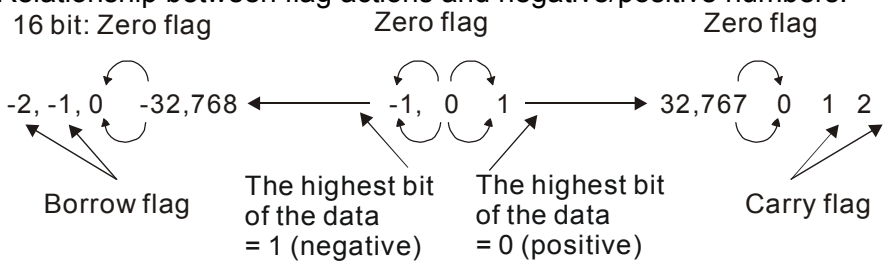


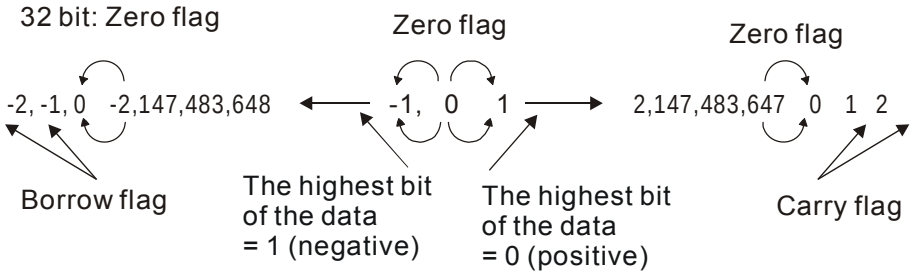

| API 21 | D | **SUB** | P | (S1) (S2) (D) | BIN subtraction |
|---|---|---|---|---|---|

| | Bit device | | | Word device | | | | | | | |
|---|---|---|---|---|---|---|---|---|---|---|---|
| | X | Y | M | K | H | KnX | KnY | KnM | T | C | D |
| S1 | | | | * | * | * | * | * | * | * | * |
| S2 | | | | * | * | * | * | * | * | * | * |
| D | | | | | | | * | * | * | * | * |

Notes on operand usage: none

16-bit command (7 STEP)

| SUB | Continuous execution type | SUBP | Pulse execution type |
|---|---|---|---|

32-bit command (13 STEP)

| DSUB | Continuous execution type | DSUBP | Pulse execution type |
|---|---|---|---|

Flag signal: M1020 Zero flag
M1021 Borrow flag
M1022 Carry flag
Please refer to the following supplementary explanation

**Explanation**

- (S1): Minuend. (S2): Subtrahend. (D): Difference.
- Using two data sources: The result of subtraction of (S1) and (S2) using the BIN method is stored in (D).
- The highest bit of any data is symbolized as bit 0 indicating (positive) 1 indicating (negative), enabling the use of algebraic subtraction operations.
- Flag changes connected with subtraction.

1. When calculation results are 0, the zero flag M1020 will be On.
2. When calculation results are less than –32,768, the borrow flag M1021 will be On.
3. When calculation results are greater than 32,767, the carry flag M1022 will be On.

**Example**

- 16-bit BIN subtraction: When X0=On, the content of D10 is subtracted from the content of D0, and the difference is stored in D20.

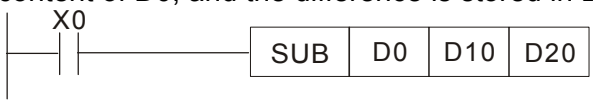

| API 22 | D | **MUL** | P | (S1) (S2) (D) | BIN multiplication |
|---|---|---|---|---|---|

| | Bit device | | | Word device | | | | | | | |
|---|---|---|---|---|---|---|---|---|---|---|---|
| | X | Y | M | K | H | KnX | KnY | KnM | T | C | D |
| S1 | | | | * | * | * | * | * | * | * | * |
| S2 | | | | * | * | * | * | * | * | * | * |
| D | | | | | | | * | * | * | * | * |

Notes on operand usage:
The 16-bit command operand D will occupy 2 consecutive points

16-bit command (7 STEP)

| MUL | Continuous execution type | MULP | Pulse execution type |
|---|---|---|---|

32-bit command (13 STEP)

| DMUL | Continuous execution type | DMULP | Pulse execution type |
|---|---|---|---|

Flag signal: none

**Explanation**

- (S1): Multiplicand. (S2): Multiplier. (D): Product.
- Using two data sources: When (S1) and (S2) are multiplied using the BIN method, the product is stored in (D).

16-bit BIN multiplication operation:

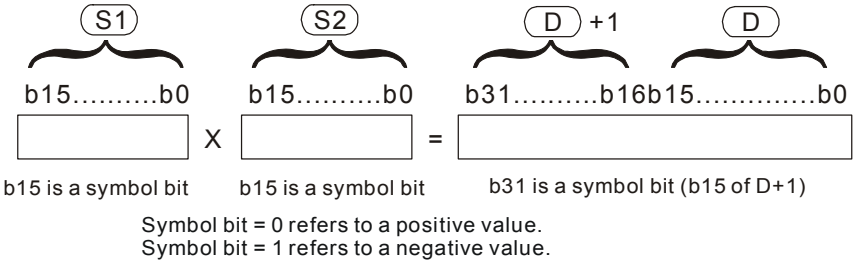


When (D) is a bit device, K1-K4 can be designated as a hexadecimal number, which will occupy 2 consecutive units.

**Example**

- When 16-bit DO is multiplied by 16-bit D10, the result will be a 32-bit product; the upper 16 bits will be stored in D21, and the lower 16 bits will be stored in D20. Whether the bit at the farthest left is Off or On will indicate the sign of the result.

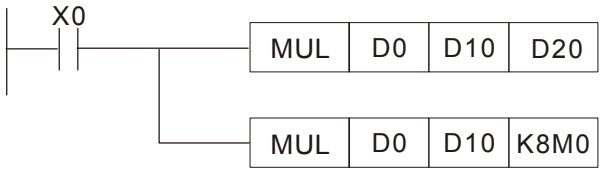

| API 23 | D | **DIV** | P | (S1) (S2) (D) | BIN division |
|---|---|---|---|---|---|

| | Bit device | | | Word device | | | | | | | |
|---|---|---|---|---|---|---|---|---|---|---|---|
| | X | Y | M | K | H | KnX | KnY | KnM | T | C | D |
| S1 | | | | * | * | * | * | * | * | * | * |
| S2 | | | | * | * | * | * | * | * | * | * |
| D | | | | | | | * | * | * | * | * |

Notes on operand usage:
The 16-bit command operand D will occupy 2 consecutive points

| 16-bit command (7 STEP) | | | |
|---|---|---|---|
| DIV | Continuous execution type | DIVP | Pulse execution type |

| 32-bit command (13 STEP) | | | |
|---|---|---|---|
| DDIV | Continuous execution type | DDIVP | Pulse execution type |

Flag signal: none

**Explanation**

- (S1): Dividend. (S2): Divisor. (D): Quotient and remainder.
- Using two data sources: The quotient and remainder will be stored in (D) when (S1) and (S2) are subjected to division using the BIN method. The sign bit for (S1), (S2) and (D) must be kept in mind when performing a 16-bit operation.

16-bit BIN division:

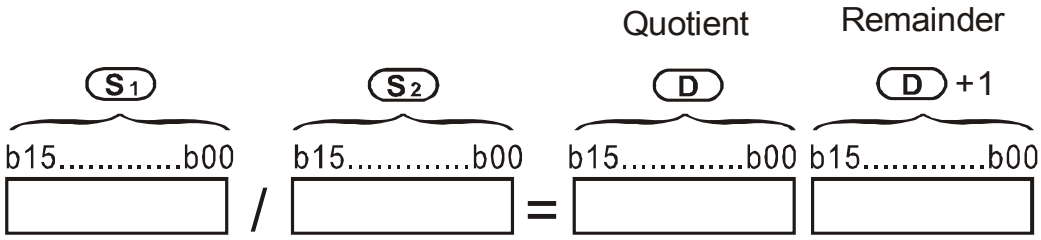


If (D) is a bit device, K1-K4 can be designated 16 bits, which will occupy 2 consecutive units and yield the quotient and remainder.

**Example**

- When X0=On, the quotient resulting from division of dividend D0 by divisor D10 will be placed in D20, and the remainder will be placed in D21. Whether the highest bit is Off or On will indicate the sign of the result.

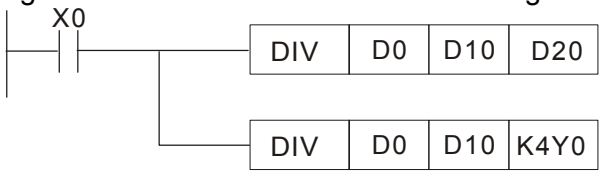

| API 24 | D | **INC** | P | (D) | BIN add one |
|---|---|---|---|---|---|

| | Bit device | | | Word device | | | | | | | |
|---|---|---|---|---|---|---|---|---|---|---|---|
| | X | Y | M | K | H | KnX | KnY | KnM | T | C | D |
| D | | | | | | | * | * | * | * | * |

Notes on operand usage: none

16-bit command (3 STEP)

| INC | Continuous execution type | INCP | Pulse execution type |
|---|---|---|---|

32-bit command (5 STEP)

| DINC | Continuous execution type | DINCP | Pulse execution type |
|---|---|---|---|

Flag signal: none

**Explanation**

- (D): Destination device.
- If a command is not the pulse execution type, when the command is executed, the program will add 1 to the content of device (D) for each scanning cycle.
- This command is ordinarily used as a pulse execution type command (INCP).
- During 16-bit operation, 32,767 +1 will change the value to -32,768. During 32 bit operation, 2,147,483,647 +1 will change the value to -2,147,483,648.

**Example**

- When X0=Off→On, 1 is automatically added to the content of D0.

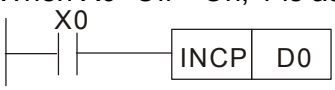

| API 25 | D | **DEC** | P | (D) | BIN subtract one |
|---|---|---|---|---|---|

| | Bit device | | | Word device | | | | | | | |
|---|---|---|---|---|---|---|---|---|---|---|---|
| | X | Y | M | K | H | KnX | KnY | KnM | T | C | D |
| D | | | | * | * | * | * | * | | | |

Notes on operand usage: none

16-bit command (3 STEP)

| DEC | Continuous execution type | DECP | Pulse execution type |
|---|---|---|---|

32-bit command (5 STEP)

| DDEC | Continuous execution type | DDECP | Pulse execution type |
|---|---|---|---|

Flag signal: none

**Explanation**

- (D): Destination device.
- If a command is not the pulse execution type, when the command is executed, the program will add 1 to the content of device (D) for each scanning cycle.
- This command is ordinarily used as a pulse execution type command (DECP).
- During 16-bit operation, -32,768 -1 will change the value to 32,767. During 32 bit operation, -2,147,483,648 -1 will change the value to -2,147,483,647.

**Example**

- When X0=Off→On, 1 is automatically subtracted from the content of D0.

| API 30 | D | **ROR** | P | D n | Right rotation |
|---|---|---|---|---|---|

| | Bit device | | | Word device | | | | | | | |
|---|---|---|---|---|---|---|---|---|---|---|---|
| | X | Y | M | K | H | KnX | KnY | KnM | T | C | D |
| D | | | | | | | * | * | * | * | * |
| n | | | | * | * | | | | | | |

Notes on operand usage:
Only K4 (16-bit) will be valid if the operand D is designated as KnY or KnM.
n operand n=K1-K16 (16-bit)

16-bit command (5 STEP)

| ROR | Continuous execution type | RORP | Pulse execution type |
|---|---|---|---|

32-bit command (9 STEP)

| DROR | Continuous execution type | DRORP | Pulse execution type |
|---|---|---|---|

Flag signal: M1022 Carry flag

**Explanation**

- D: Device to be rotated. n: Number of bits for one rotation.
- Rotates the device designated by D to the right n bits.
- This command is ordinarily used as a pulse execution type command (RORP).

**Example**

- When X0=Off→On, 4 of the 16 bits in D10 specify a right rotation; the content of the bit indicated with * (see figure below) will be sent to the carry flag signal M1022.

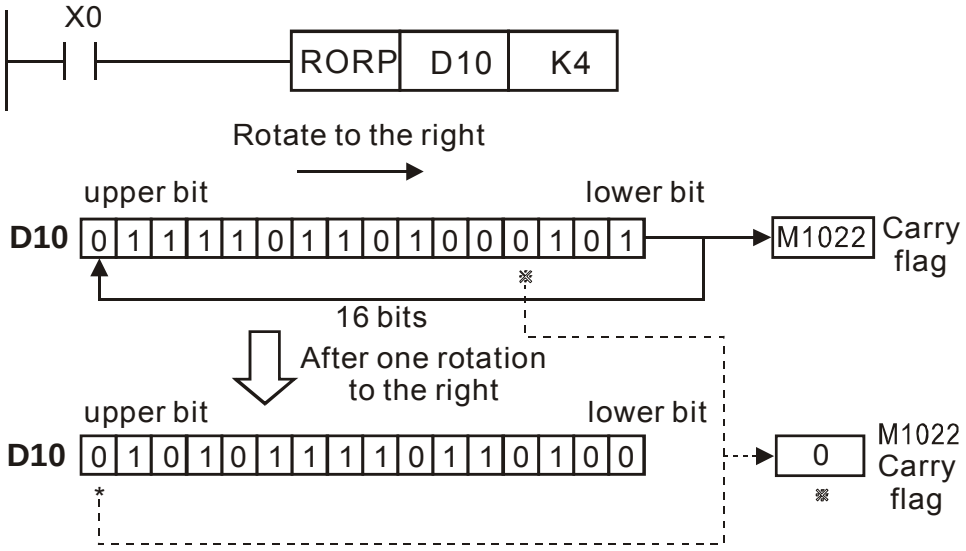

| API 31 | D | **ROL** | P | (D) (n) | Left rotation |
|---|---|---|---|---|---|

| | Bit device | | | Word device | | | | | | | |
|---|---|---|---|---|---|---|---|---|---|---|---|
| | X | Y | M | K | H | KnX | KnY | KnM | T | C | D |
| D | | | | | | | * | * | * | * | * |
| n | | | | * | * | | | | | | |

Notes on operand usage:
Only K4 (16-bit) will be valid if the operand D is designated as KnY or KnM.
n operand n=1 to 16 (16-bit)

16-bit command (5 STEP)

| ROL | Continuous execution type | ROLP | Pulse execution type |
|---|---|---|---|

32-bit command (9 STEP)

| DROL | Continuous execution type | DROLP | Pulse execution type |
|---|---|---|---|

Flag signal: M1022 Carry flag

**Explanation**

- (D): Device to be rotated. (n): Number of bits for one rotation.
- Rotates the device designated by (D) to the left (n) bits.
- This command is ordinarily used as a pulse execution type command (ROLP).

**Example**

- When X0=Off→On, 4 of the 16 bits in D10 specify a left rotation; the content of the bit indicated with * (see figure below) will be sent to the carry flag signal M1022.

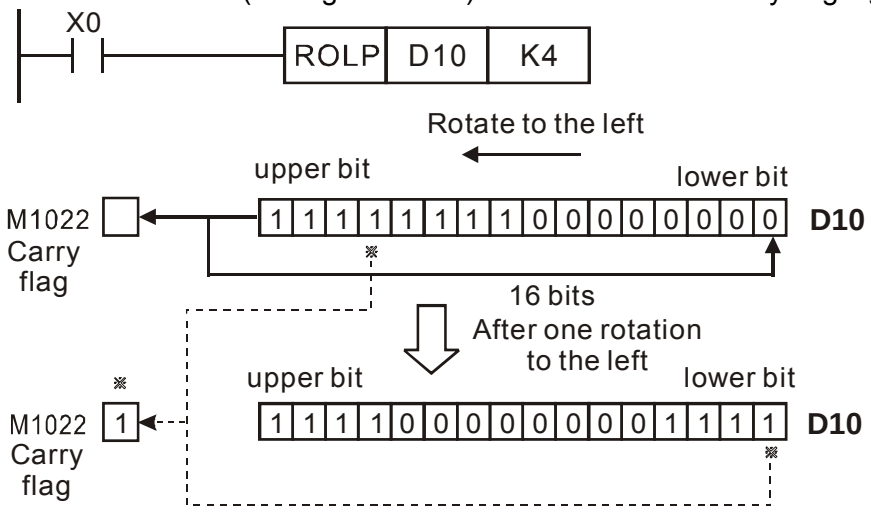

| API 40 | | **ZRST** | **P** | (D1) (D2) | Clear range |
|---|---|---|---|---|---|

| | Bit device | | | Word device | | | | | | | |
|---|---|---|---|---|---|---|---|---|---|---|---|
| | X | Y | M | K | H | KnX | KnY | KnM | T | C | D |
| D1 | | ∗ | ∗ | | | | | | ∗ | ∗ | ∗ |
| D2 | | ∗ | ∗ | | | | | | ∗ | ∗ | ∗ |

Notes on operand usage:
Number of operand $D_1$ operand ≤ number of operand $D_2$
Operands $D_1$, $D_2$ must designate the same type of device
Please refer to the function specifications table for each device in series for the scope of device usage

| 16-bit command (5 STEP) | | | |
|---|---|---|---|
| ZRST | Continuous execution type | ZRSTP | Pulse execution type |
| 32-bit command | | | |
| — | — | — | — |

Flag signal: none

**Explanation**

- **$D_1$**: Clear range's initial device. **$D_2$**: Clear range's final device.
- When the number of operand $D_1$ > number of operand $D_2$, only the operand designated by $D_2$ will be cleared.

**Example**

- When X0 is On, auxiliary relays M300 - M399 will be cleared and changed to Off.
- When X1 is On, 16-bit counters C0 - C127 will all be cleared. (Writes 0, and clears and changes contact and coil to Off).
- When X10 is On, timer T0 - T127 will all be cleared. (Writes 0, and clears and changes contact and coil to Off).
- When X3 is On, the data in data registers D0 - D100 will be cleared and set as 0.

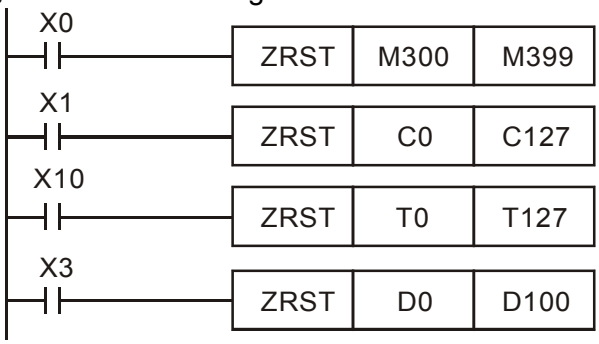


**Remark**

- Devices can independently use the clear command (RST), such as bit device Y, M and word device T, C, D.

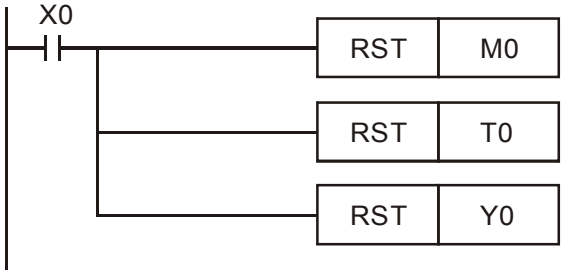

| API 49 | D | FLT | P | S D | BIN whole number → binary decimal transformation |
|---|---|---|---|---|---|

| | Bit device | | | Word device | | | | | | | |
|---|---|---|---|---|---|---|---|---|---|---|---|
| | X | Y | M | K | H | KnX | KnY | KnM | T | C | D |
| S | | * | * | | | | | | * | * | * |
| D | | * | * | | | | | | * | * | * |

Notes on operand usage: Please refer to the function specifications table for each device in series for the scope of device usage
The operand D will occupy 2 consecutive points

16-bit command

| – | – | – | – |
|---|---|---|---|

32-bit command (9steps)

| DFLT | Continuous execution type | DFLTP | Pulse execution type |
|---|---|---|---|

Flag signal: none

Explanation

- **S**: Transformation source device. **D**: Device storing transformation results.
- Transforms BIN whole number into a binary decimal value.

Example

- When X11 is On, converts the whole number of values corresponding to D0 and D1 into floating point numbers, which are placed in D20 and D21.

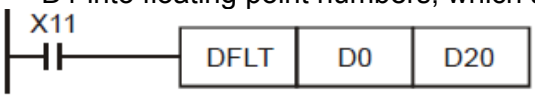

| API 150 | MODRW P | S1 S2 S3 S n | MODBUS data read/write |
|---|---|---|---|

| | Bit device | | | Word device | | | | | | | |
|---|---|---|---|---|---|---|---|---|---|---|---|
| | X | Y | M | K | H | KnX | KnY | KnM | T | C | D |
| S1 | | | | * | * | | | | | | * |
| S2 | | | | * | * | | | | | | * |
| S3 | | | | * | * | | | | | | * |
| S | | | | | | | | | | | * |
| n | | | | * | * | | | | | | * |

| 16-bit command (5 STEP) | | | |
|---|---|---|---|
| MODRW | Continuous execution type | MODRW P | Pulse execution type |
| 32-bit command | | | |
| — | — | — | — |

Flag signal: M1077 M1078 M1079

Explanation

- S1: online device address. S2: communications function code. S3: address of data to read/write. S: register for data to be read/written is stored. N: length of data to be read/written.
- COM1 must be defined as controlled by the PLC (set P9-31 = -12) before using this command, and the corresponding communications speed and format must also be set (set P09-01 and P09-04). S2: communications function code. Currently only supports the following function code; the remaining function code cannot be executed.

| Function | Description |
|---|---|
| H 02 | Input read |
| H 03 | Read word |
| H 06 | Write single word |
| H 0F | Write multiple coils |
| H10 | Write single word |

- After executing this command, M1077, M1078 and M1079 will be immediately changed to 0.

- As an example, when CP2000 must control another converter and PLC, if the converter has a station number of 10 and the PLC has a station number of 20, see the following example:

Control slave device converter

| Serial No. | Example | MODRW command | | | | |
|---|---|---|---|---|---|---|
| | | S1 | S2 | S3 | S4 | n |
| | | Node ID | Function code | Address | Register | Length: |
| 1 | Reads 4 sets of data comprising the converter slave device parameters P01-00 to P01-03, and saves the read data in D0 to D3 | K10 | H3 | H100 | D0 | K4 |
| 2 | Reads 3 sets of data comprising the converter slave device addresses H2100 to H2102, and saves the read data in D5 to D7 | K10 | H3 | H2100 | D5 | K3 |
| 3 | Reads 3 sets of data comprising the converter slave device parameters P05-00 to P05-03, and writes the values as D10 to D12 | K10 | H10 | H500 | D10 | K3 |
| 4 | Writes 2 sets of data comprising the converter slave device addresses H2000 to H2001, and writes the values as D15 to D16 | K10 | H10 | H2000 | D15 | K2 |

PLC controlling slave device

| Serial No. | Example | MODRW command | | | | |
|---|---|---|---|---|---|---|
| | | S1 | S2 | S3 | S4 | n |
| | | Node ID | Function code | Address | Register | Length: |
| 1 | Reads 4 sets of data comprising the PLC slave device's X0 to X3 state, and saves the read data in bits 0 to 3 of D0 | K20 | H2 | H400 | D0 | K4 |
| 2 | Reads 4 sets of data comprising the PLC slave device's Y0 to Y3 state, and saves the read data in bits 0 to 3 of D1 | K20 | H2 | H500 | D1 | K4 |
| 3 | Reads 4 sets of data comprising the PLC slave device's M0 to M3 state, and saves the read data in bits 0 to 3 of D2 | K20 | H2 | H800 | D2 | K4 |
| 4 | Reads 4 sets of data comprising the PLC slave device's T0 to T3 state, and saves the read data in bits 0 to 3 of D3 | K20 | H2 | H600 | D3 | K4 |
| 5 | Reads 4 sets of data comprising the PLC slave device's C0 to C3 state, and saves the read data in bits 0 to 3 of D4 | K20 | H2 | HE00 | D4 | K4 |
| 6 | Reads 4 sets of data comprising the PLC slave device's T0 to T3 count value, and saves the read data of D10 to D13 | K20 | H3 | H600 | D10 | K4 |
| 7 | Reads 4 sets of data comprising the PLC slave device's C0 to C3 count value, and saves the read data of D20 to D23 | K20 | H3 | HE00 | D20 | K4 |
| 8 | Reads 4 sets of data comprising the PLC slave device's D0 to D3 count value, and saves the read data of D30 to D33 | K20 | H3 | H1000 | D30 | K4 |
| 9 | Writes 4 sets of the PLC slave device's Y0 to Y3 state, and writes the values as bits 0 to 3 of D1 | K20 | HF | H500 | D1 | K4 |
| 10 | Writes 4 sets of the PLC slave device's M0 to M3 state, and writes the values as bits 0 to 3 of D2 | K20 | HF | H800 | D2 | K4 |
| 11 | Writes 4 sets of the PLC slave device's T0 to T3 state, and writes the values as bits 0 to 3 of D3 | K20 | HF | H600 | D3 | K4 |
| 12 | Writes 4 sets of the PLC slave device's C0 to C3 state, and writes the values as bits 0 to 3 of D4 | K20 | HF | HE00 | D4 | K4 |
| 13 | Writes 4 sets of the PLC slave device's T0 to T3 state, and writes the values of D10 to D13 | K20 | H10 | H600 | D10 | K4 |
| 14 | Writes 4 sets of the PLC slave device's C0 to C3 state, and writes the values of D20 to D23 | K20 | H10 | HE00 | D20 | K4 |
| 15 | Writes 4 sets of the PLC slave device's D0 to D3 state, and writes the values of D30 to D33 | K20 | H10 | H1000 | D30 | K4 |

Example

- Will trigger M0 On when the PLC begins to operate, and sends instruction to execute one MODRW command.
- After receiving the slave device's response, if the command is correct, it will execute one ROL command, which will cause M1 to be On.
- After receiving the slave device's response, will trigger M50 = 1 after a delay of 10 PLC scanning cycles, and then execute one MODRW command.
- After again receiving the slave device's response, if the command is correct, it will execute one ROL command, and M2 will change to On at this time (and M2 can be defined as a repeat of M); K4M0 will change to K1, and only M0 will remain 1. Transmission can proceed in a continuous cycle. If you wish to add a command, merely add the desired command in the empty frame, and change repeat M to Mn+1.

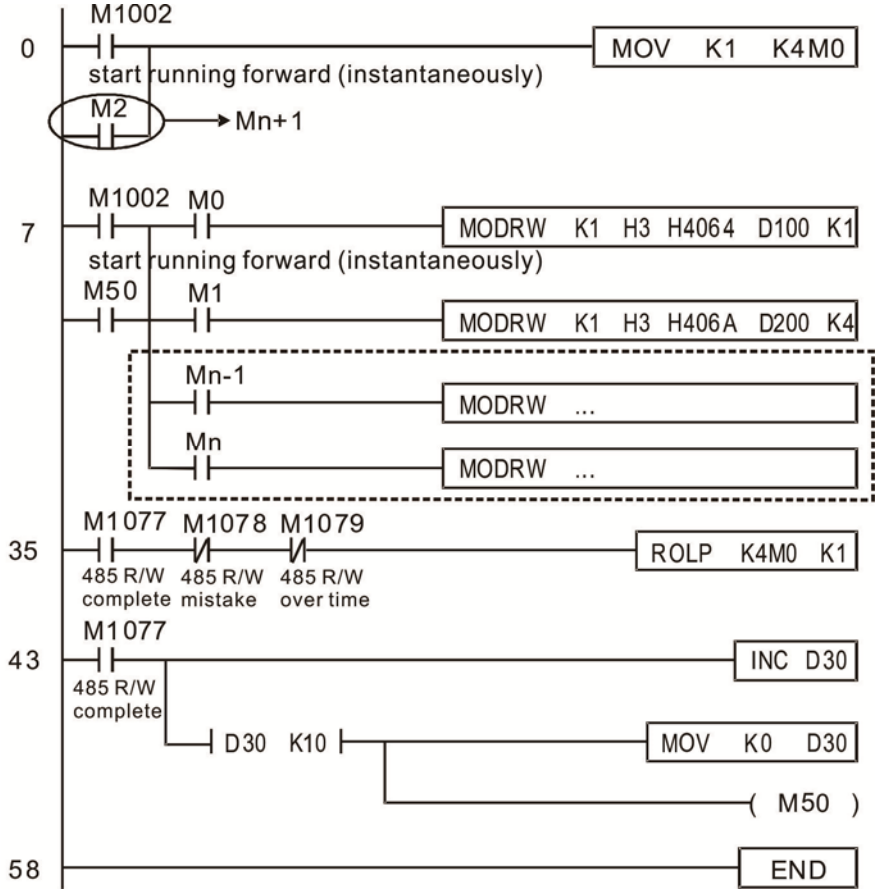

| API 110 | D | **ECMP** | P | S1 S2 D | Comparison of binary floating point numbers |
|---|---|---|---|---|---|

| | Bit device | | | Word device | | | | | | | |
|---|---|---|---|---|---|---|---|---|---|---|---|
| | X | Y | M | K | H | KnX | KnY | KnM | T | C | D |
| S1 | | | | * | * | | | | | | * |
| S2 | | | | * | * | | | | | | * |
| D | | | | * | * | | | | | | * |

Notes on operand usage:
The operand D occupies three consecutive points
Please refer to the function specifications table for each device in series for the scope of device usage

16-bit command

| — | — | — | — |
|---|---|---|---|

32-bit command (13 STEP)

| DECMP | Continuous execution type | DECMPP | Pulse execution type |
|---|---|---|---|

Flag signal: none

Explanation

- **$S_1$**: Comparison of binary floating point numbers value 1. **$S_2$**: Comparison of binary floating point numbers value 2. **D**: Results of comparison, occupies 3 consecutive points.
- When binary floating point number 1 is compared with comparative binary floating point number 2, the result of comparison (>, =, <) will be expressed in **D**.
- **If the source operand $S_1$** or **$S_2$** designates a constant K or H, the command will transform the constant to a binary floating-point number for the purpose of comparison.

Example

- When the designated device is M10, it will automatically occupy M10-M12.
- When X0=On, the DECMP command executes, and one of M10-M12 will be On. When X0=Off, the DECMP command will not execute, and M10-M12 will remain in the X0=Off state.
- If results in the form of ≥, ≤, or ≠ are needed, they can be obtained by series and parallel connection of M10-M12.
- Please use the RST or ZRST command to clear the result.

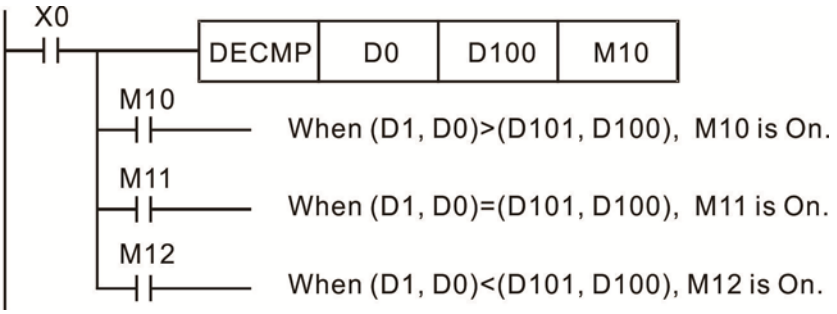

| API 111 | D | EZCP | P | $S_1$ $S_2$ S D | Comparison of binary floating point number range |
|---|---|---|---|---|---|

| | Bit device | | | Word device | | | | | | | |
|---|---|---|---|---|---|---|---|---|---|---|---|
| | X | Y | M | K | H | KnX | KnY | KnM | T | C | D |
| S1 | | | | * | * | | | | | | * |
| S2 | | | | * | * | | | | | | * |
| S | | | | * | * | | | | | | * |
| D | | * | * | | | | | | | | |

Notes on operand usage:
The operand D occupies three consecutive points
Please refer to the function specifications table for each device in series for the scope of device usage

16-bit command

| — | — | — | — |
|---|---|---|---|

32-bit command (17 STEP)

| DEZCP | Continuous execution type | DEZCPP | Pulse execution type |
|---|---|---|---|

Flag signal: none

Explanation

- **$S_1$**: Lower limit of binary floating point number in range comparison. **$S_2$**: Upper limit of binary floating point number in range comparison. **S**: Comparison of binary floating point numerical values. **D**: Results of comparison, occupies 3 consecutive points.
- Comparison of binary floating point numerical value **S** with binary floating point number lower limit value **$S_1$** and binary floating point number upper limit value **$S_2$**; the results of comparison are expressed in **D**.
- **If the source operand $S_1$** or **$S_2$** designates a constant K or H, the command will transform the constant to a binary floating-point number for the purpose of comparison.
- When the lower limit binary floating point number **$S_1$** is greater than the upper limit binary floating point number **$S_2$**, a command will be issued to perform comparison with the upper and lower limits using the binary floating point number lower limit value **$S_1$**.

Example

- When the designated device is M0, it will automatically occupy M0- M2.
- When X0=On, the DEZCP command will be executed, and one of M0-M2 will be On. When X0=Off, the EZCP command will not execute, and M0-M2 will continue in the X0=Off state.
- Please use the RST or ZRST command to clear the result.

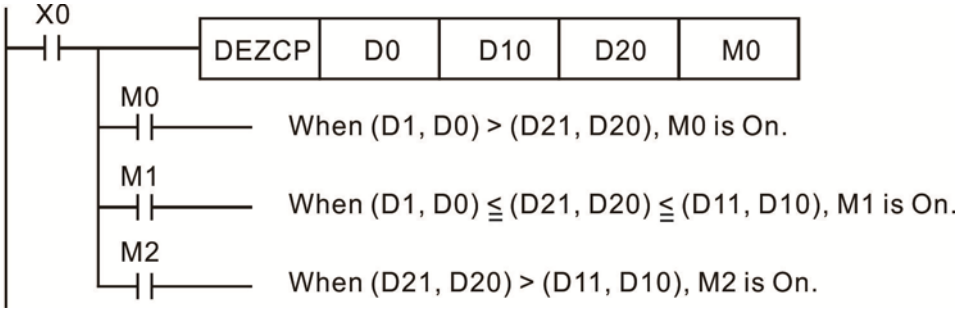

| API 116 | D | **RAD** | P | (S) (D) | Angle → Radian |
|---|---|---|---|---|---|

| | Bit device | | | Word device | | | | | | | |
|---|---|---|---|---|---|---|---|---|---|---|---|
| | X | Y | M | K | H | KnX | KnY | KnM | T | C | D |
| S | | | | * | * | | | | | | * |
| D | | | | | | | | | | | * |

Notes on operand usage:
Please refer to the function specifications table for each device in series for the scope of device usage

16-bit command

| — | — | — | — |
|---|---|---|---|

32-bit command (9 STEP)

| DRAD | Continuous execution type | DRADP | 脈波執行型 |
|---|---|---|---|

Flag signal: none

Explanation

- **S**: data source (angle). **D**: result of transformation (radian).
- Uses the following formula to convert angles to radians.
- Radian ＝Angle × (π/180)

Example

- When X0=On, the angle of the designated binary floating point number (D1, D0) will be converted to radians and stored in (D11, D10), with the content consisting of a binary floating point number.

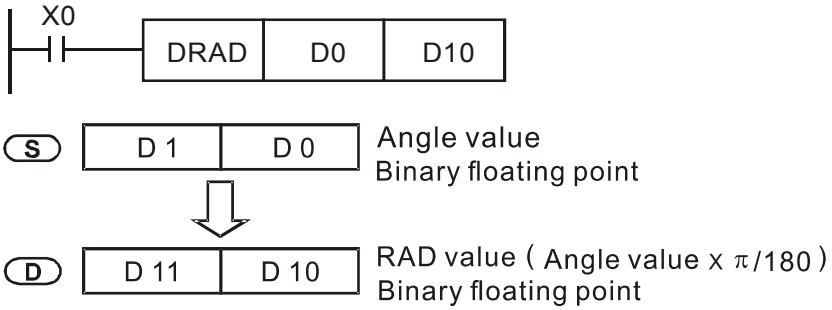

| API 117 | D | **DEG** | P | (S) (D) | Radian → Angle |
|---|---|---|---|---|---|

| | Bit device | | | Word device | | | | | | | |
|---|---|---|---|---|---|---|---|---|---|---|---|
| | X | Y | M | K | H | KnX | KnY | KnM | T | C | D |
| S | | | | * | * | | | | | | * |
| D | | | | | | | | | | | * |

Notes on operand usage:
Please refer to the function specifications table for each device in series for the scope of device usage

16-bit command

| — | — | — | — |
|---|---|---|---|

32-bit command (9 STEP)

| DDEG | Continuous execution type | DDEGP | Pulse execution type |
|---|---|---|---|

Flag signal: none

Explanation

- **S**: data source (radian). **D**: results of transformation (angle).
- Uses the following formula to convert radians to an angle.
- Angle ＝Radian × (180/π)

Example

- When X0=On, angle of the designated binary floating point number (D1, D0) in radians will be converted to an angle and stored in (D11, D10), with the content consisting of a binary floating point number.

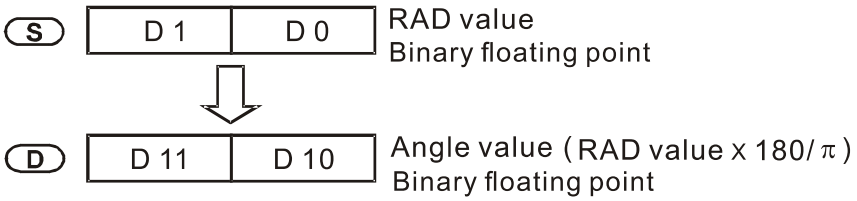

| API 120 | D | **EADD** | P | S1 S2 D | Adding binary floating point numbers |
|---|---|---|---|---|---|

| | Bit device | | | Word device | | | | | | | |
|---|---|---|---|---|---|---|---|---|---|---|---|
| | X | Y | M | K | H | KnX | KnY | KnM | T | C | D |
| S1 | | | | * | * | | | | | | * |
| S2 | | | | * | * | | | | | | * |
| D | | | | | | | | | | | * |

Notes on operand usage:
Please refer to the function specifications table for each device in series for the scope of device usage

| 16-bit command | | | |
|---|---|---|---|
| — | — | — | — |

| 32-bit command (9 STEP) | | | |
|---|---|---|---|
| DEADD | Continuous execution type | DEADDP | Pulse execution type |

Flag signal: none

Explanation

- **$S_1$**: addend. **$S_2$**: augend. **D**: sum.
- When the content of the register designated by **$S_2$** is added to the content of the register designated by **$S_1$**, and the result is stored in the register designated by **D**. Addition is performed entirely using binary floating-point numbers.
- **If the source operand $S_1$** or **$S_2$** designates a constant K or H, the command will transform that constant into a binary floating point number for use in addition.
- **In the situation when $S_1$** and **$S_2$** designate identical register numbers, if a "continuous execution" command is employed, when conditional contact is On, the register will perform addition once during each scan. Pulse execution type commands (DEADDP) are generally used under ordinary circumstances.

Example

- When X0=On, a binary floating point number (D1, D0) will be added to a binary floating point number (D3, D2), and the results stored in (D11, D10).

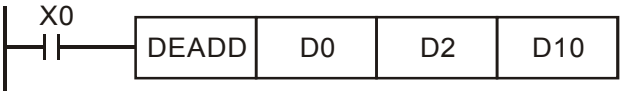


- When X2 =On, a binary floating point number (D11, D10) will be added to K1234 (which has been automatically converted to a binary floating-point number), and the results stored in (D21, D20).

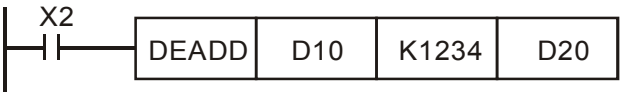

| API 121 | D | **ESUB** | P | (S1) (S2) (D) | Subtraction of binary floating point numbers |
|---|---|---|---|---|---|

| | Bit device | | | Word device | | | | | | | |
|---|---|---|---|---|---|---|---|---|---|---|---|
| | X | Y | M | K | H | KnX | KnY | KnM | T | C | D |
| S1 | | | | * | * | | | | | | * |
| S2 | | | | * | * | | | | | | * |
| D | | | | | | | | | | | * |

Notes on operand usage:
Please refer to the function specifications table for each device in series for the scope of device usage

16-bit command

| — | — | — | — |
|---|---|---|---|

32-bit command (13 STEP)

| DESUB | Continuous execution type | DESUBP | Pulse execution type |
|---|---|---|---|

Flag signal: none

Explanation

- **$S_1$**: minuend. **$S_2$**: subtrahend. **D**: difference.
- When the content of the register designated by **$S_2$** is subtracted from the content of the register designated by **$S_1$**, the difference will be stored in the register designated by **D**; subtraction is performed entirely using binary floating-point numbers.
- **If the source operand $S_1$** or **$S_2$** designates a constant K or H, the command will transform that constant into a binary floating point number for use in subtraction.
- **In the situation when $S_1$** and **$S_2$** designate identical register numbers, if a "continuous execution" command is employed, when conditional contact is On, the register will perform addition once during each scan. Pulse execution type commands (DESUBP) are generally used under ordinary circumstances.

Example

- When X0=On, a binary floating point number (D1, D0) will be subtracted to a binary floating point number (D3, D2), and the results stored in (D11, D10).

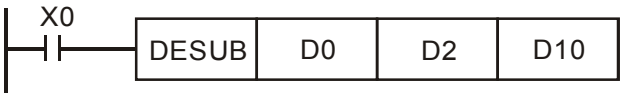


- When X2 =On, the binary floating point number (D1, D0) will be subtracted from K1234 (which has been automatically converted to a binary floating-point number), and the results stored in (D11, D10).

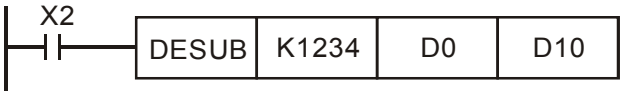

| API 122 | D | **EMUL** | P | S1 S2 D | Multiplication of binary floating point numbers |
|---|---|---|---|---|---|

| | Bit device | | | Word device | | | | | | | |
|---|---|---|---|---|---|---|---|---|---|---|---|
| | X | Y | M | K | H | KnX | KnY | KnM | T | C | D |
| S1 | | | | * | * | | | | | | * |
| S2 | | | | * | * | | | | | | * |
| D | | | | | | | | | | | * |

Notes on operand usage:
Please refer to the function specifications table for each device in series for the scope of device usage

| 16-bit command | | | |
|---|---|---|---|
| — | — | — | — |

| 32-bit command (13 STEP) | | | |
|---|---|---|---|
| DEMUL | Continuous execution type | DEMULP | Pulse execution type |

Flag signal: none

Explanation

- **$S_1$**: multiplicand. **$S_2$**: multiplier. **D**: product.
- When the content of the register designated by **$S_1$** is multiplied by the content of the register designated by **$S_2$**, the product will be stored in the register designated by **D**; multiplication is performed entirely using binary floating-point numbers.
- **If the source operand $S_1$** or **$S_2$** designates a constant K or H, the command will transform that constant into a binary floating point number for use in multiplication.
- **In the situation when $S_1$** and **$S_2$** designate identical register numbers, if a "continuous execution" command is employed, when conditional contact is On, the register will perform multiplication once during each scan. Pulse execution type commands (DEMULP) are generally used under ordinary circumstances.

Example

- When X1=On, the binary floating point number (D1, D0) will be multiplied by the binary floating point number (D11, D10), and the product will be stored in the register designated by (D21, D20).

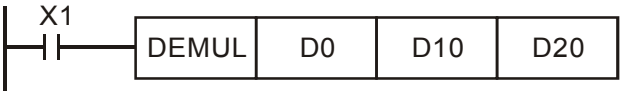


- When X2 =On, the binary floating point number (D1, D0) will be multiplied from K1234 (which has been automatically converted to a binary floating-point number), and the results stored in (D11, D10).

| API 123 | D | **EDIV** | P | S1 S2 D | Division of binary floating point numbers |
|---|---|---|---|---|---|

| | Bit device | | | Word device | | | | | | | |
|---|---|---|---|---|---|---|---|---|---|---|---|
| | X | Y | M | K | H | KnX | KnY | KnM | T | C | D |
| S1 | | | | * | * | | | | | | * |
| S2 | | | | * | * | | | | | | * |
| D | | | | | | | | | | | * |

Notes on operand usage:
Please refer to the function specifications table for each device in series for the scope of device usage

| 16-bit command | | | |
|---|---|---|---|
| — | — | — | — |

| 32-bit command (13 STEP) | | | |
|---|---|---|---|
| DEDIV | Continuous execution type | DEDIVP | Pulse execution type |

Flag signal: none

Explanation

◆ **$S_1$**: dividend. **$S_2$**: divisor. **D**: quotient and remainder.

◆ When the content of the register designated by **$S_1$** is divided by the content of the register designated by **$S_2$**, the quotient will be stored in the register designated by **D**; division is performed entirely using binary floating-point numbers.

■ **If the source operand $S_1$** or **$S_2$** designates a constant K or H, the command will transform that constant into a binary floating point number for use in division.

Example

◆ When X1=On, the binary floating point number (D1, D0) will be divided by the binary floating point number (D11, D10), and the quotient stored in the register designated by (D21, D20).

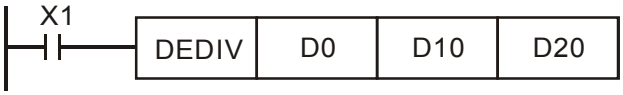


◆ When X2 =On, the binary floating point number (D1, D0) will be divided by K1,234 (which has been automatically converted to a binary floating-point number), and the results stored in (D11, D10).

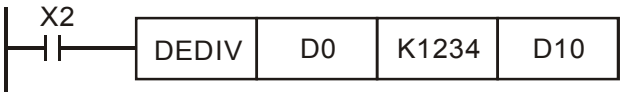

| API 124 | D | **EXP** | P | S D | Binary floating point number obtain exponent |
|---|---|---|---|---|---|

| | Bit device | | | Word device | | | | | | | |
|---|---|---|---|---|---|---|---|---|---|---|---|
| | X | Y | M | K | H | KnX | KnY | KnM | T | C | D |
| S | | | | * | * | | | | | | * |
| D | | | | | | | | | | | * |

Notes on operand usage:
Please refer to the function specifications table for each device in series for the scope of device usage

16-bit command

| — | — | — | — |
|---|---|---|---|

32-bit command (9 STEP)

| DEXP | Continuous execution type | DEXPP | Pulse execution type |
|---|---|---|---|

Flag signal: none

Explanation

- **S**: operation source device. **D**: operation results device.
- Taking e =2.71828 as a base, **S** is the exponent in the EXP operation.
- [ **D** +1，**D** ]=EXP [ **S +1**，**S** ]
- Valid regardless of whether the content of **S** has a positive or negative value. The designated register D must have a 32-bit data format. This operation is performed using floating-point numbers, and **S** must therefore be converted to a floating point number.
- Content of operand **D** =$e^{S}$ ; e=2.71828, **S** is the designated source data

Example

- When M0 is On, the value of (D1, D0) will be converted to a binary floating point number, which will be stored in register (D11, D10).
- When M1 is On, the EXP operation is performed on the exponent of (D11, D10); its value is a binary floating point number stored in register (D21, D20).

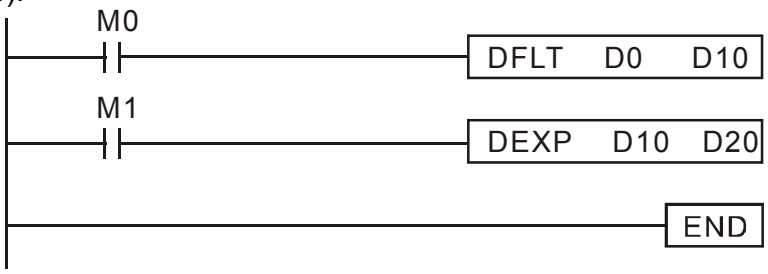

| API 125 | D | **LN** | P | S D | Binary floating point number obtain logarithm |
|---|---|---|---|---|---|

| | Bit device | | | Word device | | | | | | | |
|---|---|---|---|---|---|---|---|---|---|---|---|
| | X | Y | M | K | H | KnX | KnY | KnM | T | C | D |
| S | | | | * | * | | | | | | * |
| D | | | | | | | | | | | * |

Notes on operand usage:
Please refer to the function specifications table for each device in series for the scope of device usage

16-bit command

| — | — | — | — |
|---|---|---|---|

32-bit command (9 STEP)

| DLN | Continuous execution type | DLNP | Pulse execution type |
|---|---|---|---|

Flag signal: none

Explanation

- **S**: operation source device. **D**: operation results device.
- Taking e =2.71828 as a base, **S** is the exponent in the EXP operation.
- [ **D** +1，**D** ]=EXP[ **S +1**，**S** ]
- Valid regardless of whether the content of **S** has a positive or negative value. The designated register D must have a 32-bit data format. This operation is performed using floating-point numbers, and **S** must therefore be converted to a floating point number.
- Content of operand **D** =$e^{S}$ ; e=2.71828， **S** is the designated source data

Example

- When M0 is On, the value of (D1, D0) will be converted to a binary floating point number, which will be stored in register (D11, D10).
- When M1 is On, the EXP operation is performed on the exponent of (D11, D10); its value is a binary floating point number stored in register (D21, D20).

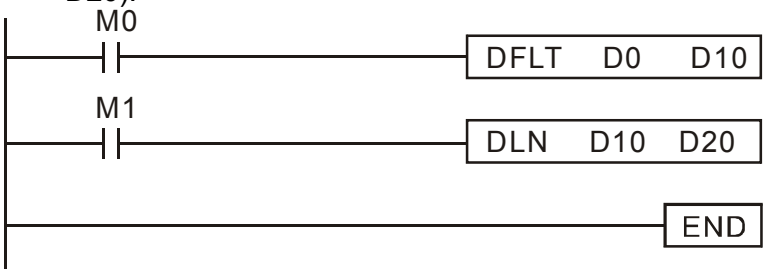

| API 127 | D | **ESQR** | P | (S) (D) | Binary floating point number find square root |
|---|---|---|---|---|---|

| | Bit device | | | Word device | | | | | | | |
|---|---|---|---|---|---|---|---|---|---|---|---|
| | X | Y | M | K | H | KnX | KnY | KnM | T | C | D |
| S | | | | * | * | | | | | | * |
| D | | | | | | | | | | | * |

Notes on operand usage:
Please refer to the function specifications table for each device in series for the scope of device usage

16-bit command

| — | — | — | — |
|---|---|---|---|

32-bit command (9 STEP)

| DESQR | Continuous execution type | DESQR P | Pulse execution type |
|---|---|---|---|

Flag signal: none

Explanation

- **S**: source device for which square root is desired **D**: result of finding square root.
- When the square root is taken of the content of the register designated by **S**, the result is temporarily stored in the register designated by **D**. Taking square roots is performed entirely using binary floating-point numbers.
- If the source operand **S** refers to a constant K or H, the command will transform that constant into a binary floating point number for use in the operation.

Example

- When X0=On, the square root is taken of the binary floating point number (D1, D0), and the result is stored in the register designated by (D11, D10).

$\sqrt{(D1, D0)} \rightarrow (D11, D10)$

Binary floating point → Binary floating point

- When X2 =On, the square root is taken of K1,234 (which has been automatically converted to a binary floating-point number), and the results stored in (D11, D10).

| API 129 | D | INT | P | S D | Binary floating point number → BIN whole number transformation |
|---|---|---|---|---|---|

| | Bit device | | | Word device | | | | | | | |
|---|---|---|---|---|---|---|---|---|---|---|---|
| | X | Y | M | K | H | KnX | KnY | KnM | T | C | D |
| S | | | | | | | | | | | * |
| D | | | | | | | | | | | * |

Notes on operand usage:
Please refer to the function specifications table for each device in series for the scope of device usage

| 16-bit command | | | |
|---|---|---|---|
| – | – | – | – |

| 32-bit command (9 STEP) | | | |
|---|---|---|---|
| DINT | Continuous execution type | DINTP | Pulse execution type |

Flag signal: none

Explanation

- **S**: the source device to be transformed. **D**: results of transformation.
- The content of the register designated by **S** is transformed from a binary floating point number format into a BIN whole number, and is temporarily stored in **D**. The BIN whole number floating point number will be discarded.
- The action of this command is the opposite of that of command API 49 (FLT).

Example

- When X0=On, the binary floating point number (D1, D0) is transformed into a BIN whole number, and the result is stored in (D10); the BIN whole number floating point number will be discarded.

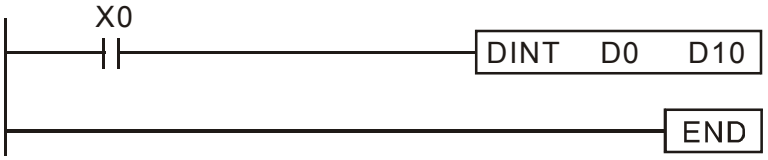

| API 130 | D | **SIN** | P | (S) (D) | Binary floating point number SIN operation |
|---|---|---|---|---|---|

| | Bit device | | | Word device | | | | | | | |
|---|---|---|---|---|---|---|---|---|---|---|---|
| | X | Y | M | K | H | KnX | KnY | KnM | T | C | D |
| S | | | | * | * | | | | | | * |
| D | | | | | | | | | | | * |

Notes on operand usage:
Please refer to the function specifications table for each device in series for the scope of device usage

| 16-bit command | | | |
|---|---|---|---|
| – | – | – | – |

| 32-bit command (9 STEP) | | | |
|---|---|---|---|
| DSIN | Continuous execution type | DSINP | Pulse execution type |

Flag signal: none

Explanation

- **S**: the designated source value. **D**: the SIN value result.
- **S** is the designated source in radians.
- The value in radians (RAD) is equal to (angle ×π/180).
- The SIN obtained from the source value designated by **S** is stored in **D**.

The following figure displays the relationship between the arc and SIN results:

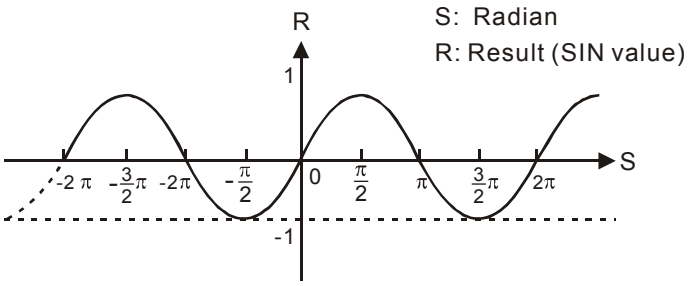


Example

- When X0=On, the SIN value of the designated binary floating point number (D1, D0) in radians (RAD) will be stored in (D11, D10), with the content consisting of a binary floating point number.

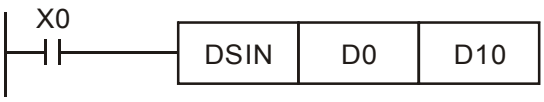


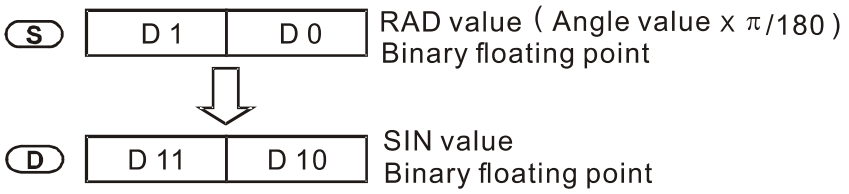

| API 131 | D | **COS** | P | (S) (D) | Binary floating point number COS operation |
|---|---|---|---|---|---|

| | Bit device | | | Word device | | | | | | | |
|---|---|---|---|---|---|---|---|---|---|---|---|
| | X | Y | M | K | H | KnX | KnY | KnM | T | C | D |
| S | | | | * | * | | | | | | * |
| D | | | | | | | | | | | * |

Notes on operand usage:
Please refer to the function specifications table for each device in series for the scope of device usage

16-bit command

| — | — | — | — |
|---|---|---|---|

32-bit command (9 STEP)

| DCOS | Continuous execution type | DCOSP | Pulse execution type |
|---|---|---|---|

Flag signal: none

Explanation

- **S**: the designated source value. **D**: the COS value result.
- **The source designated by S can be given as radians or an angle; this is decided by flag M1018.**
- When M1018=Off, the operation is in radians mode, where the radians (RAD) value is equal to (angle ×π/180).
- When M1018=On, the operation is in the angle mode, where the angular range is 0°≤ angle <360°.
- When calculation results yield 0, M1020=On.
- The COS obtained from the source value designated by **S** is stored in **D**.

The following figure displays the relationship between the arc and SIN results:

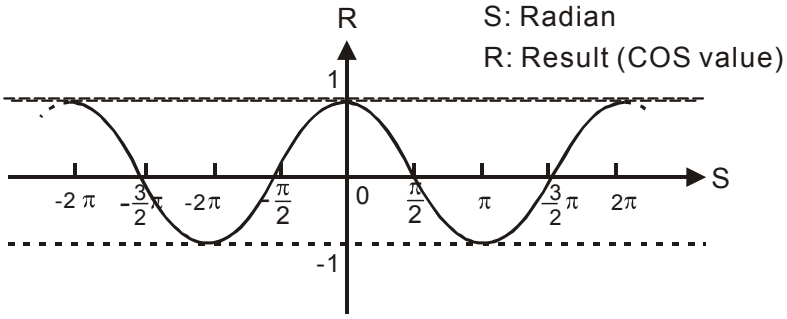


Example

- When X0=On, the COS value of the designated binary floating point number (D1, D0) in radians will be stored in (D11, D10), with the content consisting of a binary floating point number.

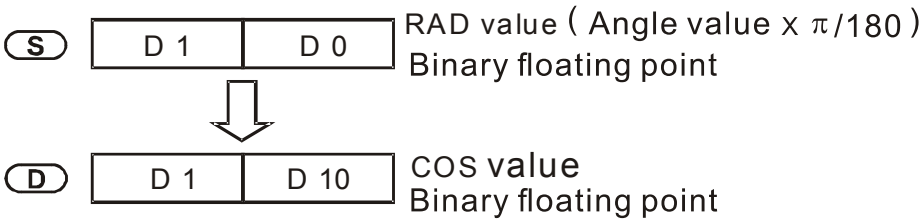

| API 132 | D | TAN | P | (S) (D) | Binary floating point number TAN operation |
|---|---|---|---|---|---|

| | Bit device | | | Word device | | | | | | | |
|---|---|---|---|---|---|---|---|---|---|---|---|
| | X | Y | M | K | H | KnX | KnY | KnM | T | C | D |
| S | | | | * | * | | | | | | * |
| D | | | | | | | | | | | * |

Notes on operand usage:
Please refer to the function specifications table for each device in series for the scope of device usage

16-bit command

| — | — | — | — |
|---|---|---|---|

32-bit command (9 STEP)

| DTAN | Continuous execution type | DTANP | Pulse execution type |
|---|---|---|---|

Flag signal: none

Explanation

- **S**: the designated source value. **D**: the TAN value result.
- The source designated by **S** can be given as radians or an angle; this is decided by flag M1018.
- When M1018=Off, the operation is in radians mode, where the radians (RAD) value is equal to (angle ×π/180).
- When M1018=On, the operation is in the angle mode, where the angular range is 0°≤ angle <360°.
- When calculation results yield 0, M1020=On.
- The TAN obtained from the source value designated by **S** is stored in **D**.

The following figure displays the relationship between the arc and SIN results:

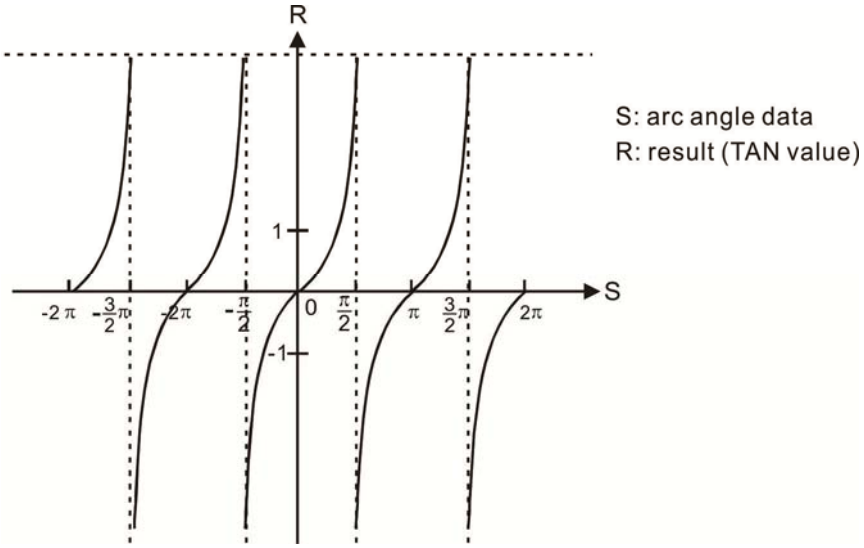


Example

◆ When X0=On, the TAN value of the designated binary floating point number (D1, D0) in radians (RAD) will be stored in (D11, D10), with the content consisting of a binary floating point number.

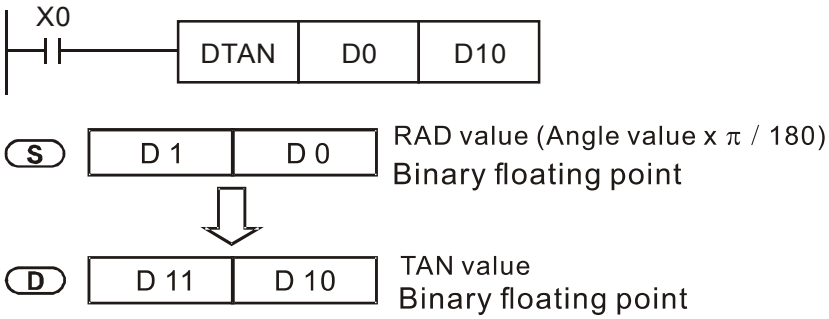

| API 133 | D | **ASIN** | P | (S) (D) | Binary floating point number ASIN operation |
|---|---|---|---|---|---|

| | Bit device | | | Word device | | | | | | | |
|---|---|---|---|---|---|---|---|---|---|---|---|
| | X | Y | M | K | H | KnX | KnY | KnM | T | C | D |
| S | | | | * | * | | | | | | * |
| D | | | | | | | | | | | * |

Notes on operand usage:
Please refer to the function specifications table for each device in series for the scope of device usage

| 16-bit command | | | |
|---|---|---|---|
| — | — | — | — |

| 32-bit command (9 STEP) | | | |
|---|---|---|---|
| DASIN | Continuous execution type | DASINP | Pulse execution type |

Flag signal: none

Explanation

- **S**: the designated source (binary floating point number). **D**: the ASIN value result.
- ASIN value $=\sin^{-1}$

The figure below shows the relationship between input data and result:

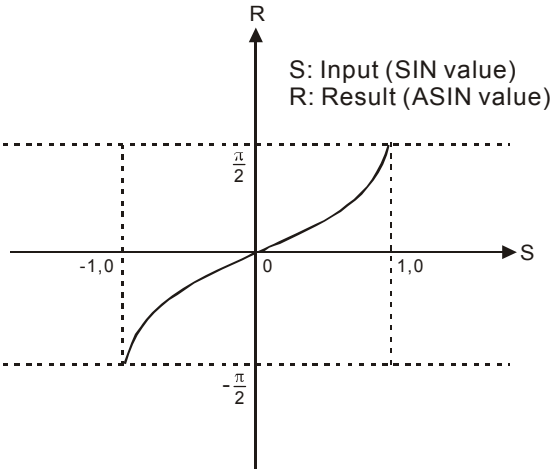


Example

- When X0=On, the ASIN value obtained from the designated binary floating point number (D1, D0) will be stored in (D11, D10), with the content consisting of a binary floating point number.

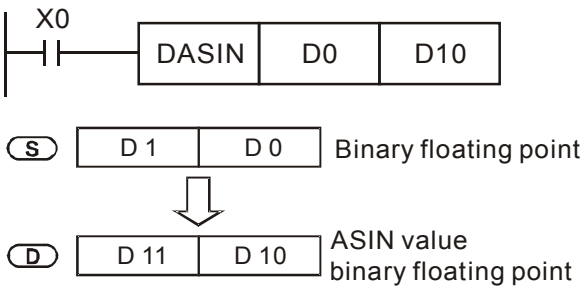

| API 134 | D | **ACOS** | P | (S) (D) | Binary floating point number ACOS operation |
|---|---|---|---|---|---|

| | Bit device | | | Word device | | | | | | | |
|---|---|---|---|---|---|---|---|---|---|---|---|
| | X | Y | M | K | H | KnX | KnY | KnM | T | C | D |
| S | | | | * | * | | | | | | * |
| D | | | | | | | | | | | * |

Notes on operand usage:
Please refer to the function specifications table for each device in series for the scope of device usage

16-bit command

| — | — | — | — |
|---|---|---|---|

32-bit command (9 STEP)

| DACOS | Continuous execution type | DACOS P | Pulse execution type |
|---|---|---|---|

Flag signal: none

Explanation

- **S**: the designated source (binary floating point number). **D**: the ACOS value result.
- ACOS value $=\cos^{-1}$

The figure below shows the relationship between input data and result:

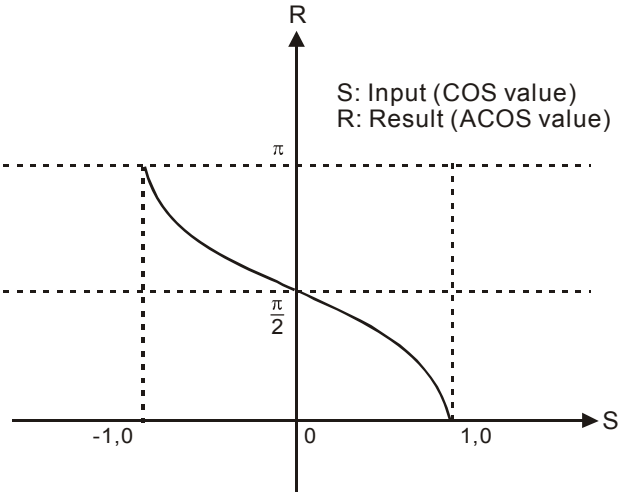


Example

- When X0=On, the ACOS value obtained from the designated binary floating point number (D1, D0) will be stored in (D11, D10), with the content consisting of a binary floating point number.

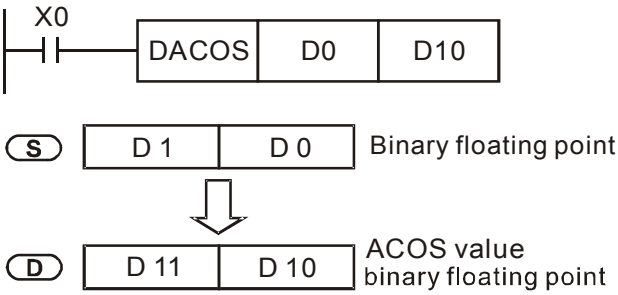

| API 135 | D | **ATAN** | P | (S) (D) | Binary floating point number ATAN operation |
|---|---|---|---|---|---|

| | Bit device | | | Word device | | | | | | | |
|---|---|---|---|---|---|---|---|---|---|---|---|
| | X | Y | M | K | H | KnX | KnY | KnM | T | C | D |
| S | | | | * | * | | | | | | * |
| D | | | | | | | | | | | * |

Notes on operand usage:
Please refer to the function specifications table for each device in series for the scope of device usage

16-bit command

| — | — | — | — |
|---|---|---|---|

32-bit command (9 STEP)

| DATAN | Continuous execution type | DATANP | Pulse execution type |
|---|---|---|---|

Flag signal: none

Explanation

- **S**: the designated source (binary floating point number). **D**: the ATAN value result.
- ATAN value =$\tan^{-1}$

The figure below shows the relationship between input data and result:

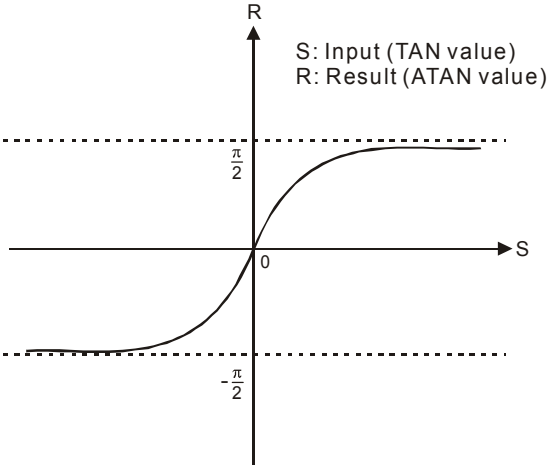


Example

- When X0=On, the TAN value obtained from the designated binary floating point number (D1, D0) will be stored in (D11, D10), with the content consisting of a binary floating point number.

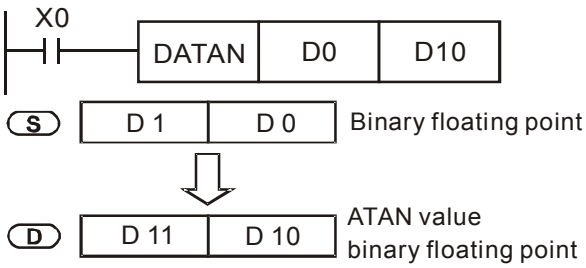

| API 136 | D | **SINH** | P | (S) (D) | Binary floating point number SINH operation |
|---|---|---|---|---|---|

| | Bit device | | | Word device | | | | | | | |
|---|---|---|---|---|---|---|---|---|---|---|---|
| | X | Y | M | K | H | KnX | KnY | KnM | T | C | D |
| S | | | | * | * | | | | | | * |
| D | | | | | | | | | | | * |

Notes on operand usage:
Please refer to the function specifications table for each device in series for the scope of device usage

16-bit command

| — | — | — | — |
|---|---|---|---|

32-bit command (9 STEP)

| DSINH | Continuous execution type | DSINHP | Pulse execution type |
|---|---|---|---|

Flag signal: none

Explanation

- **S**: the designated source (binary floating point number). **D**: the SINH value result.
- SINH value $=(e^{s}-e^{-s})/2$

Example

- When X0=On, the SINH value obtained from the designated binary floating point number (D1, D0) will be stored in (D11, D10), with the content consisting of a binary floating point number.

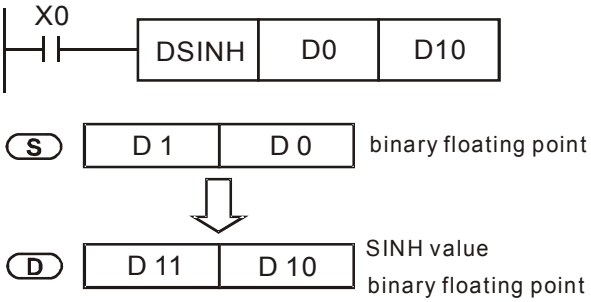

| API 137 | D | **COSH** | P | (S) (D) | Binary floating point number COSH operation |
|---|---|---|---|---|---|

| | Bit device | | | Word device | | | | | | | |
|---|---|---|---|---|---|---|---|---|---|---|---|
| | X | Y | M | K | H | KnX | KnY | KnM | T | C | D |
| S | | | | * | * | | | | | | * |
| D | | | | | | | | | | | * |

Notes on operand usage:
Please refer to the function specifications table for each device in series for the scope of device usage

16-bit command

| — | — | — | — |
|---|---|---|---|

32-bit command (9 STEP)

| DCOSH | Continuous execution type | DCOSHP | Pulse execution type |
|---|---|---|---|

Flag signal: none

Explanation

- **S**: the designated source (binary floating point number). **D**: the COSH value result.
- COSH value $=(e^{s}+e^{-s})/2$

Example

- When X0=On, the COSH value obtained from the designated binary floating point number (D1, D0) will be stored in (D11, D10), with the content consisting of a binary floating point number.

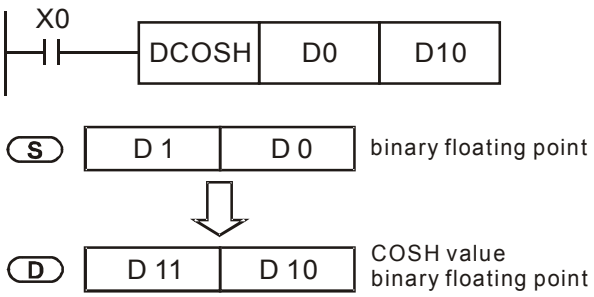

| API 138 | D | **TANH** | P | (S) (D) | Binary floating point number TANH operation |
|---|---|---|---|---|---|

| | Bit device | | | Word device | | | | | | | |
|---|---|---|---|---|---|---|---|---|---|---|---|
| | X | Y | M | K | H | KnX | KnY | KnM | T | C | D |
| S | | | | * | * | | | | | | * |
| D | | | | | | | | | | | * |

Notes on operand usage:
Please refer to the function specifications table for each device in series for the scope of device usage

16-bit command

| — | — | — | — |
|---|---|---|---|

32-bit command (9 STEP)

| DTANH | Continuous execution type | DTANHP | Pulse execution type |
|---|---|---|---|

Flag signal: none

Explanation

- **S**: the designated source (binary floating point number). **D**: the TANH value result.
- tanh value $=(e^{s}-e^{-s})/(e^{s}+e^{-s})$

Example

- When X0=On, the TANH value obtained from the designated binary floating point number (D1, D0) will be stored in (D11, D10), with the content consisting of a binary floating point number.

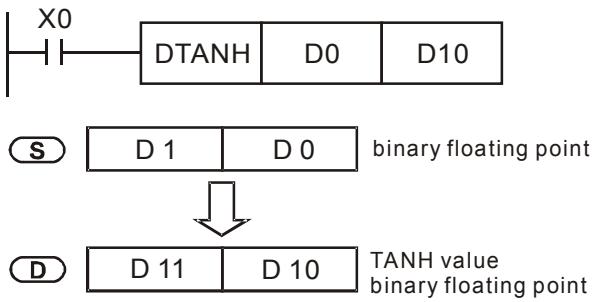

| API 160 | | **TCMP** | P | (S1) (S2) (S3) (S) (D) | Comparison of calendar data |
|---|---|---|---|---|---|

| | Bit device | | | Word device | | | | | | | |
|---|---|---|---|---|---|---|---|---|---|---|---|
| | X | Y | M | K | H | KnX | KnY | KnM | T | C | D |
| S1 | | | | * | * | * | * | * | * | * | * |
| S2 | | | | * | * | * | * | * | * | * | * |
| S3 | | | | * | * | * | * | * | * | * | * |
| S | | | | | | | | | * | * | * |
| D | | * | * | | | | | | | | |

Notes on operand usage:
Please refer to the function specifications table for each device in series for the scope of device usage

16-bit command (11 STEP)

| TCMP | Continuous execution type | TCMPP | Pulse execution type |
|---|---|---|---|

32-bit command

| — | — | — | — |
|---|---|---|---|

Flag signal: none

Explanation

- **$S_1$**: Sets the hours of the comparison time, setting range is "K0-K23." **$S_2$**: Sets the minutes of the comparison time, setting range is "K0-K59." **$S_3$**: Sets the seconds of the comparison time, setting range is "K0-K59." **S**: current calendar time. **D**: Results of comparison.
- Compares the time in hours, minutes, and seconds set in **$S_1$** - **$S_3$** with the current calendar time in hours, minutes, and seconds, with the results of comparison expressed in **D**.
- **S** The hour content of the current calendar time is "K0-K23." **S** +1 comprises the minutes of the current calendar time, and consists of "K0-K59." **S** +2 comprises the seconds of the current calendar time, and consists of "K0-K59."
- The current calendar time designated by **S** is usually compared using the TCMP command after using the TRD command to read the current calendar time. If the content value of **S** exceeds the range, this is considered an operating error, the command will not execute, and M1068=On.

Example

- When X10=On, the command will execute, and the current calendar time in D20-D22 will be compared with the preset value of 12:20:45; the results will be displayed in M10-M12. When X10 On→Off, the command will not be executed, but the On/Off status prior to M10-M12 will be maintained.
- If results in the form of ≥, ≤, or ≠ are needed, they can be obtained by series and parallel connection of M10-M12.

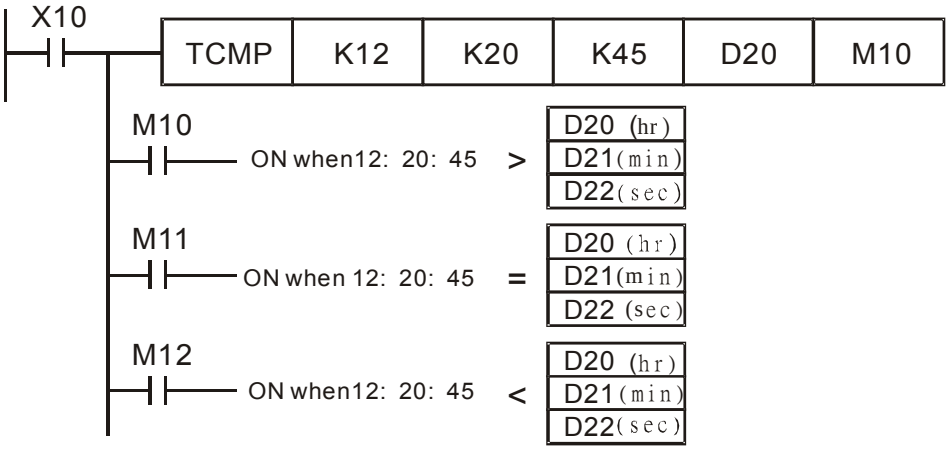

| API 161 | | **TZCP** | P | (S1) (S2) (S) (D) | Comparison of calendar data |
|---|---|---|---|---|---|

| | Bit device | | | Word device | | | | | | | |
|---|---|---|---|---|---|---|---|---|---|---|---|
| | X | Y | M | K | H | KnX | KnY | KnM | T | C | D |
| S1 | | | | | | | | | * | * | * |
| S2 | | | | | | | | | * | * | * |
| S | | | | | | | | | * | * | * |
| D | | * | * | | | | | | | | |

Notes on operand usage:
Please refer to the function specifications table for each device in series for the scope of device usage

| 16-bit command (9 STEP) | | | |
|---|---|---|---|
| TZCP | Continuous execution type | TZCPP | Pulse execution type |
| 32-bit command | | | |
| — | — | — | — |

Flag signal: none

Explanation

- **$S_1$**: Sets the lower limit of the comparison time. **$S_2$**: Sets the upper limit of the comparison time. **S**: current calendar time. **D**: Results of comparison.
- Performs range comparison by comparing the hours, minutes, and seconds of the current calendar time designated by **S** with the lower limit of the comparison time set as **$S_1$** and the upper limit of the comparison time set as **$S_2$**, and expresses the results of comparison in **D**.
- **$S_1$**、**$S_1$** +1、**$S_1$** +2: Sets the hours, minutes, and seconds of the lower limit of the comparison time.
- **$S_2$**、**$S_2$** +1、**$S_2$** +2: Sets the hours, minutes, and seconds of the upper limit of the comparison time.
- **S**、**S** +1、**S** +2: The hours, minutes, and seconds of the current calendar time
- The D0 designated by the **S** listed in this program is usually obtained by comparison using the TZCP command after using the TRD command in advance to read the current calendar time. If the value of **$S_1$**, **$S_2$**, or **S** exceeds the range, this is considered an operating error, the command will not execute, and M1068=On.
- When the current time **S** is less than the lower limit value **$S_1$** and **S** is less than the upper limit value **$S_2$**, **D** will be On. When the current time **S** is greater than the lower limit value **$S_1$** and **S** is greater than the upper limit value **$S_2$**, **D** +2 will be On; **D** +1 will be On under other conditions.

Example

- When X10=On, the TZCP command executes, and one of M10-M12 will be On. When X10=Off, the TZCP command will not execute, and M10-M12 will remain in the X10=Off state.

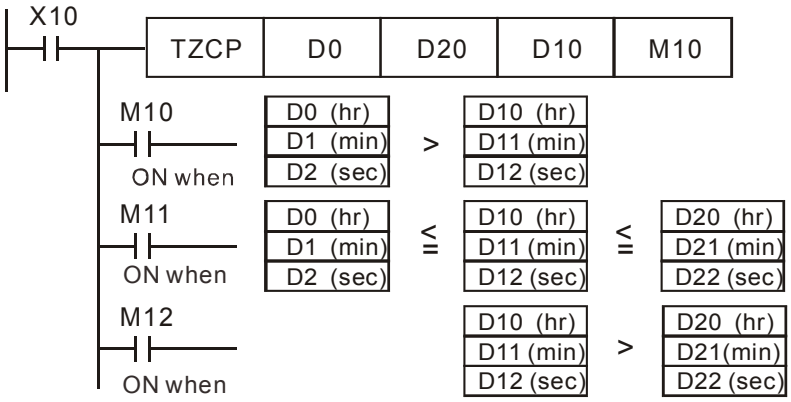

| API 162 | | **TADD** | P | (S1) (S2) (D) | Calendar data addition |
|---|---|---|---|---|---|

| | Bit device | | | Word device | | | | | | | |
|---|---|---|---|---|---|---|---|---|---|---|---|
| | X | Y | M | K | H | KnX | KnY | KnM | T | C | D |
| S1 | | | | | | | | | * | * | * |
| S2 | | | | | | | | | * | * | * |
| D | | | | | | | | | * | * | * |

Notes on operand usage:
Please refer to the function specifications table for each device in series for the scope of device usage

16-bit command (7 STEP)

| TADD | Continuous execution type | TADDP | Pulse execution type |
|---|---|---|---|

32-bit command

| – | – | – | – |
|---|---|---|---|

- Flag signal: M1020 Zero flag
  M1022 Carry flag
  M1068 Calendar error

Explanation

- **$S_1$**: time addend. **$S_2$**: time augend. **D**: time sum.
- The calendar data in hours, minutes, and seconds designated by **$S_2$** is added to the calendar data in hours, minutes, and seconds designated by **$S_1$**, and the result is stored as hours, minutes, and seconds in the register designated by **D**.
- If the value of **$S_1$** or **$S_2$** exceeds the range, this is considered an operating error, the command will not execute, M1067, M1068=On, and D1067 will record the error code 0E1A(HEX).
- If the results of addition are greater than or equal to 24 hours, carry flag M1022=On, and **D** will display the results of addition minus 24 hours.
- If the results of addition are equal to 0 (0 hours, 0 minutes, 0 seconds), zero flag M1020=On.

Example

- When X10=On, the TADD command will be executed, and the calendar data in hours, minutes, and seconds designated by D0 to D2 will be added to the calendar data in hours, minutes, and seconds designated by D10 to D12, and the results are stored as a total number of hours, minutes, and seconds in the registers designated by D20 to D22.

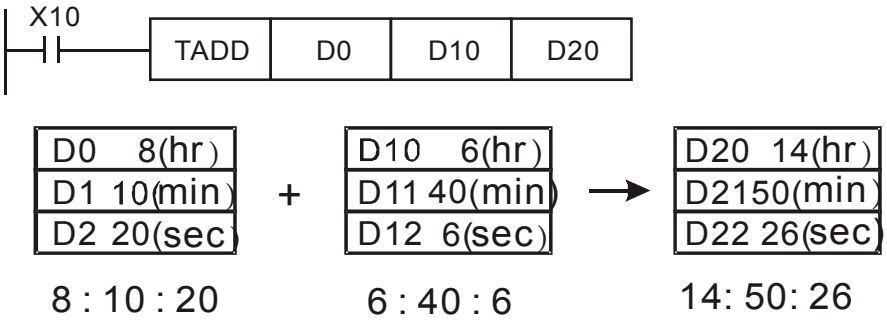

| API 163 | | TSUB | P | (S1) (S2) (D) | Calendar data subtraction |
|---|---|---|---|---|---|

| | Bit device | | | Word device | | | | | | | |
|---|---|---|---|---|---|---|---|---|---|---|---|
| | X | Y | M | K | H | KnX | KnY | KnM | T | C | D |
| S1 | | | | | | | | | * | * | * |
| S2 | | | | | | | | | * | * | * |
| D | | | | | | | | | * | * | * |

Notes on operand usage:
Please refer to the function specifications table for each device in series for the scope of device usage

| 16-bit command (7 STEP) | | | |
|---|---|---|---|
| TSUB | Continuous execution type | TSUBP | Pulse execution type |
| 32-bit command | | | |
| — | — | — | — |

- Flag signal: M1020 Zero flag
  M1022 Carry flag
  M1068 Calendar error

Explanation

- **$S_1$**: time minuend. **$S_2$**: time augend. **D**: time sum.
- Subtracts the calendar data in hours, minutes, and seconds designated by **$S_2$** from the calendar data in hours, minutes, and seconds designated by **$S_1$**, and the result is temporarily stored as hours, minutes, and seconds in the register designated by **D**.
- If the value of **$S_1$** or **$S_2$** exceeds the range, this is considered an operating error, the command will not execute, M1067, M1068=On, and D1067 will record the error code 0E1A(HEX).
- If subtraction results in a negative number, borrow flag M1021=On, and the result of that negative number plus 24 hours will be displayed in the register designated by **D**.
- If the results of subtraction are equal to 0 (0 hours, 0 minutes, 0 seconds), zero flag M1020=On.

Example

- When X10=On, the TADD command will be executed, and the calendar data in hours, minutes, and seconds designated by D10 to D12 will be subtracted from the calendar data in hours, minutes, and seconds designated by D0 to D2, and the results are stored as a total number of hours, minutes, and seconds in the registers designated by D20 to D22.

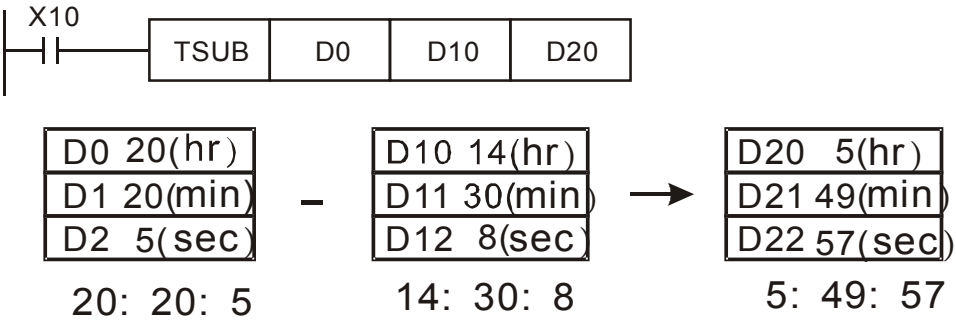

| API 166 | | **TRD** | **P** | (D) | Calendar data read |
|---|---|---|---|---|---|

| | Bit device | | | Word device | | | | | | | |
|---|---|---|---|---|---|---|---|---|---|---|---|
| | X | Y | M | K | H | KnX | KnY | KnM | T | C | D |
| D | | | | | | | | | * | * | * |

Notes on operand usage:
Please refer to the function specifications table for each device in series for the scope of device usage

16-bit command (3 STEP)

| TRD | Continuous execution type | 120 | Pulse execution type |
|---|---|---|---|

32-bit command

| – | – | – | – |
|---|---|---|---|

- Flag signal: none

Explanation

- **$S_1$**: time minuend. **$S_2$**: time augend. **D**: time sum.
- **D**: device used to store the current calendar time after reading.
- The EH/EH2/SV/EH3/SV2/SA/SX/SC main units have a built-in calendar clock, and the clock provides seven sets of data comprising year, week, month, day, hour, minute, and second stored in D1063 to D1069. The TRD command function allows program designers to directly read the current calendar time into the designated seven registers.
- D1063 only reads the two right digits of the Western calendar year.

Example

- When X0=On, the current calendar time is read into the designated registers D0 to D6.
- In D1064, 1 indicates Monday, 2 indicates Tuesday, and so on, with and 7 indicating Sunday.

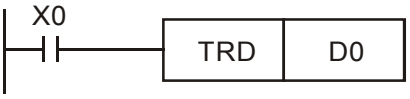


| Special D | Item | Content | | General D | Item |
|---|---|---|---|---|---|
| D1063 | Year (Western) | 00~99 | → | D0 | Year (Western) |
| D1064 | Weeks | 1~7 | → | D1 | Weeks |
| D1065 | Month | 1~12 | → | D2 | Month |
| D1066 | Day | 1~31 | → | D3 | Day |
| D1067 | Hour | 0~23 | → | D4 | Hour |
| D1068 | Minute | 0~59 | → | D5 | Minute |
| D1069 | Second | 0~59 | → | D6 | Second |

| API 170 | D | **GRY** | P | S D | BIN→GRAY code transformation |
|---|---|---|---|---|---|

| | Bit device | | | Word device | | | | | | | |
|---|---|---|---|---|---|---|---|---|---|---|---|
| | X | Y | M | K | H | KnX | KnY | KnM | T | C | D |
| S | | | | * | * | * | * | * | * | * | * |
| D | | | | | | | * | * | * | * | * |

Notes on operand usage:
Please refer to the function specifications table for each device in series for the scope of device usage

16-bit command (5 STEP)

| GRY | Continuous execution type | GRYP | Pulse execution type |
|---|---|---|---|

32-bit command (9 STEP)

| DGRY | Continuous execution type | DGRYP | Pulse execution type |
|---|---|---|---|

- Flag signal: none

Explanation

- **S**: source device. **D**: device storing GRAY code.
- Transforms the content value (BIN value) of the device designated by **S** to GRAY code, which is stored in the device designated by **D**.
- The valid range of **S** is as shown below; if this range is exceeded, it will be considered an error, and the command will not execute.

  16-bit command: 0~32,767
- 32-bit command: 0~2,147,483,647

Example

◆ When X0=On, the constant K6513 will be transformed to GRAY code and stored in D0.

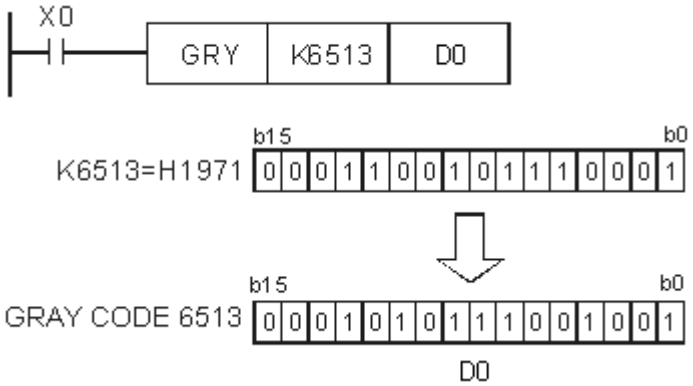

| API 171 | D | **GBIN** | P | (S) (D) | GRAY code →BIN transformation |
|---|---|---|---|---|---|

| | Bit device | | | Word device | | | | | | | |
|---|---|---|---|---|---|---|---|---|---|---|---|
| | X | Y | M | K | H | KnX | KnY | KnM | T | C | D |
| S | | | | * | * | * | * | * | * | * | * |
| D | | | | | | | * | * | * | * | * |

Notes on operand usage:
Please refer to the function specifications table for each device in series for the scope of device usage

16-bit command (5 STEP)

| GBIN | Continuous execution type | GBINP | Pulse execution type |
|---|---|---|---|

32-bit command (9 STEP)

| DGBIN | Continuous execution type | DGBINP | Pulse execution type |
|---|---|---|---|

- Flag signal: none

Explanation

- **S**: source device used to store GRAY code. **D**: device used to store BIN value after transformation.
- The GRAY code corresponding to the value of the device designated by **S** is transformed into a BIN value, which is stored in the device designated by **D**.
- This command will transform the value of the absolute position encoder connected with the PLC's input and (this encoder usually has an output value in the form of GRAY code) into a BIN value, which is stored in the designated register.
- The valid range of **S** is as shown below; if this range is exceeded, it will be considered an error, and the command will not execute.

  16-bit command: 0~32,767
- 32-bit command: 0~2,147,483,647

Example

◆ When X20=On, the GRAY code of the absolute position encoder connected with input points X0 to X17 will be transformed into BIN value and stored in D10.

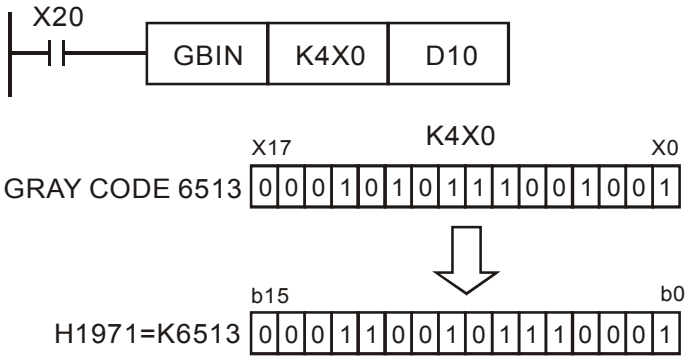

| API 215~217 | D | **LD#** | | (S1) (S2) | Contact form logical operation LD# |
|---|---|---|---|---|---|

| | Bit device | | | Word device | | | | | | | |
|---|---|---|---|---|---|---|---|---|---|---|---|
| | X | Y | M | K | H | KnX | KnY | KnM | T | C | D |
| S1 | | | | * | * | * | * | * | * | * | * |
| S2 | | | | * | * | * | * | * | * | * | * |

Notes on operand usage: # : & 、| 、^
Please refer to the function specifications table for each device in series for the range of device usage

16-bit command (5 STEP)

| LD# | Continuous execution type | — | — |
|---|---|---|---|

32-bit command (9 STEP)

| DLD# | Continuous execution type | — | — |
|---|---|---|---|

Flag signal: none

Explanation

- **$S_1$**: data source device 1. **$S_2$**: data source device 2.
- This command performs comparison of the content of **$S_1$** and **$S_2$**; when the result of comparison is not 0, this command will be activated, but this command will not be activated when the result of comparison is 0.
- The LD#This command can be used while directly connected with the busbar

| API No. | 16-bit commands | 32-bit commands | Conditions for activation | | | | Conditions for inactivation | | | |
|---|---|---|---|---|---|---|---|---|---|---|
| 215 | LD& | **D**LD& | **$S_1$** | & | **$S_2$** | ≠0 | **$S_1$** | & | **$S_2$** | =0 |
| 216 | LD\| | **D**LD\| | **$S_1$** | \| | **$S_2$** | ≠0 | **$S_1$** | \| | **$S_2$** | =0 |
| 217 | LD^ | **D**LD^ | **$S_1$** | ^ | **$S_2$** | ≠0 | **$S_1$** | ^ | **$S_2$** | =0 |

&: logical AND operation.

|: logical OR operation.

^: logical XOR operation.

Example

- When the content of C0 and C10 is subjected to the logical AND operation, and the result is not equal to 0, Y10=On.
- When the content of D200 and D300 is subjected to the logical OR operation, and the result is not equal to 0, and X1=On, Y11=On and remains in that state.

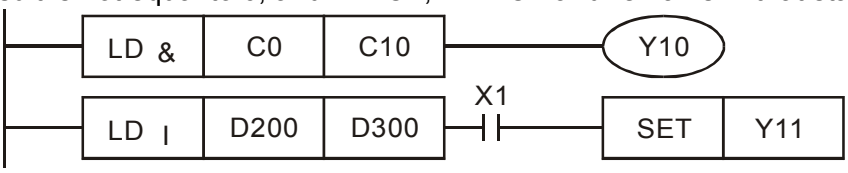

| API 218~220 | D | **AND#** | | (S1) (S2) | Contact form logical operation AND# |
|---|---|---|---|---|---|

| | Bit device | | | Word device | | | | | | | |
|---|---|---|---|---|---|---|---|---|---|---|---|
| | X | Y | M | K | H | KnX | KnY | KnM | T | C | D |
| S1 | | | | * | * | * | * | * | * | * | * |
| S2 | | | | * | * | * | * | * | * | * | * |

Notes on operand usage: # ：&、|、^
Please refer to the function specifications table for each device in series for the scope of device usage

16-bit command (5 STEP)

| AND# | Continuous execution type | — | — |
|---|---|---|---|

32-bit command (9 STEP)

| DAND# | Continuous execution type | — | — |
|---|---|---|---|

Flag signal: none

Explanation

- **$S_1$**: data source device 1. **$S_2$**: data source device 2.
- This command performs comparison of the content of **$S_1$** and **$S_2$**; when the result of comparison is not 0, this command will be activated, but this command will not be activated when the result of comparison is 0.
- The AND# command is an operation command in series with the contact.

| API No. | 16-bit commands | 32-bit commands | Conditions for activation | | | | Conditions for inactivation | | | |
|---|---|---|---|---|---|---|---|---|---|---|
| 218 | AND& | **D**AND& | **$S_1$** | & | **$S_2$** | ≠0 | **$S_1$** | & | **$S_2$** | =0 |
| 219 | AND\| | **D**AND\| | **$S_1$** | \| | **$S_2$** | ≠0 | **$S_1$** | \| | **$S_2$** | =0 |
| 220 | AND^ | **D**AND^ | **$S_1$** | ^ | **$S_2$** | ≠0 | **$S_1$** | ^ | **$S_2$** | =0 |

&: logical AND operation.

|: logical OR operation.

^: logical XOR operation.

Example

- When X0=On and the content of C0 and C10 is subjected to the logical AND operation, and the result is not equal to 0, Y10=On.
- When X1=Off and D10 and D0 is subjected to the logical OR operation, and the result is not equal to 0, Y11=On and remains in that state.
- When X2 =On and the content of the 32-bit register D200(D201) and 32-bit register D100(D101) is subjected to the logical XOR operation, and the result is not equal to 0 or M3=On, M50=On.

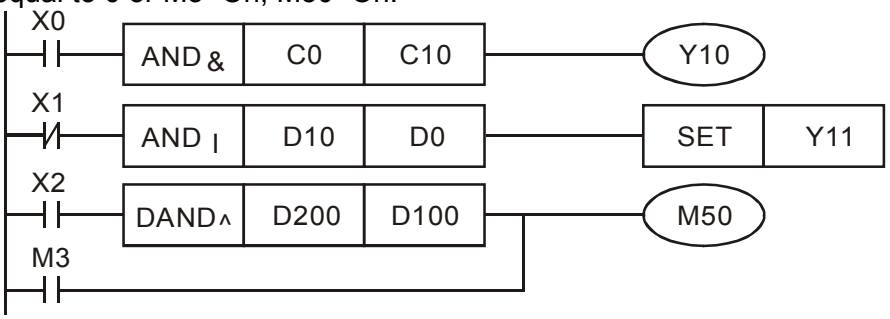

| API 221~223 | D | **OR#** | | (S1) (S2) | Contact form logical operation OR# |
|---|---|---|---|---|---|

| | Bit device | | | Word device | | | | | | | |
|---|---|---|---|---|---|---|---|---|---|---|---|
| | X | Y | M | K | H | KnX | KnY | KnM | T | C | D |
| S1 | | | | * | * | * | * | * | * | * | * |
| S2 | | | | * | * | * | * | * | * | * | * |

Notes on operand usage: # : & 、| 、^
Please refer to the function specifications table for each device in series for the scope of device usage

| 16-bit command (5 STEP) | | | |
|---|---|---|---|
| OR# | Continuous execution type | — | — |

| 32-bit command (9 STEP) | | | |
|---|---|---|---|
| DOR# | Continuous execution type | — | — |

Flag signal: none

Explanation

- **$S_1$**: data source device 1. **$S_2$**: data source device 2.
- This command performs comparison of the content of **$S_1$** and **$S_2$**; when the result of comparison is not 0, this command will be activated, but this command will not be activated when the result of comparison is 0.
- The OR# command is an operation command in series with the contact.

| API No. | 16-bit commands | 32-bit commands | Conditions for activation | | | | Conditions for inactivation | | | |
|---|---|---|---|---|---|---|---|---|---|---|
| 221 | OR& | **D**OR& | **$S_1$** | & | **$S_2$** | ≠0 | **$S_1$** | & | **$S_2$** | =0 |
| 222 | OR\| | **D**OR\| | **$S_1$** | \| | **$S_2$** | ≠0 | **$S_1$** | \| | **$S_2$** | =0 |
| 223 | OR^ | **D**OR^ | **$S_1$** | ^ | **$S_2$** | ≠0 | **$S_1$** | ^ | **$S_2$** | =0 |

&: logical AND operation.

|: logical OR operation.

^: logical XOR operation.

Example

- When X1=On or the content of C0 and C10 is subjected to the logical AND operation, and the result is not equal to 0, Y0=On.
- When X2 and M30 are both equal to On, or the content of 32-bit register D10 (D11) and 32-bit register D20 (D21) is subjected to the logical OR operation, and the result is not equal to 0, or the content of the 32-bit counter C235 and the 32-bit register D200 (D201) is subjected to the logical XOR operation, and the result is not equal to 0, M60=On.

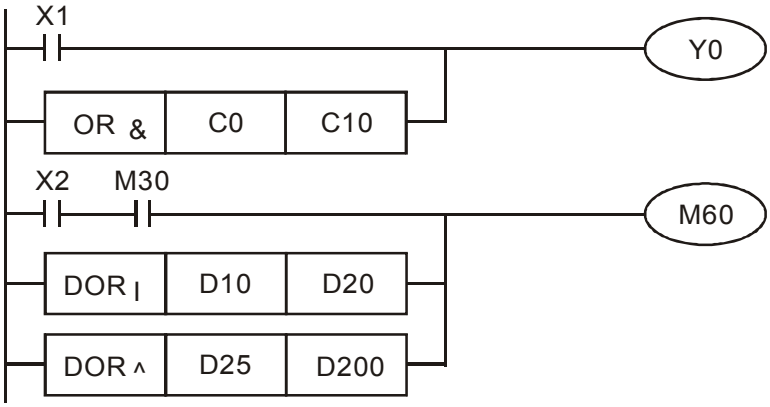

| API 224~230 | D | **LD※** | | (S1) (S2) | Contact form compare LD* |
|---|---|---|---|---|---|

| | Bit device | | | Word device | | | | | | | |
|---|---|---|---|---|---|---|---|---|---|---|---|
| | X | Y | M | K | H | KnX | KnY | KnM | T | C | D |
| S1 | | | | * | * | * | * | * | * | * | * |
| S2 | | | | * | * | * | * | * | * | * | * |

Notes on operand usage: ※ : = 、 > 、 < 、 <> 、 ≦ 、 ≧
Please refer to the function specifications table for each device in series for the scope of device usage

| 16-bit command (5 STEP) | | | |
|---|---|---|---|
| LD※ | Continuous execution type | — | — |

| 32-bit command (9 STEP) | | | |
|---|---|---|---|
| DLD※ | Continuous execution type | — | — |

Flag signal: none

Explanation

- **$S_1$**: data source device 1. **$S_2$**: data source device 2.
- This command compares the content of **$S_1$** and **$S_2$**. Taking API 224 (LD=) as an example, this command will be activated when the result of comparison is "equal," and will not be activated when the result is "unequal."
- The LD* can be used while directly connected with the busbar

| API No. | 16-bit commands | 32-bit commands | Conditions for activation | Conditions for inactivation |
|---|---|---|---|---|
| 224 | LD＝ | **D**LD＝ | $S_1 = S_2$ | $S_1 \neq S_2$ |
| 225 | LD＞ | **D**LD＞ | $S_1 > S_2$ | $S_1 \leqq S_2$ |
| 226 | LD＜ | **D**LD＜ | $S_1 < S_2$ | $S_1 \geqq S_2$ |
| 228 | LD＜＞ | **D**LD＜＞ | $S_1 \neq S_2$ | $S_1 = S_2$ |
| 229 | LD＜＝ | **D**LD＜＝ | $S_1 \leqq S_2$ | $S_1 > S_2$ |
| 230 | LD＞＝ | **D**LD＞＝ | $S_1 \geqq S_2$ | $S_1 < S_2$ |

Example

- When the content of C10 is equal to K200, Y10=On.
- When the content of D200 is greater than K-30, and X1=On, Y11=On and remains in that state.

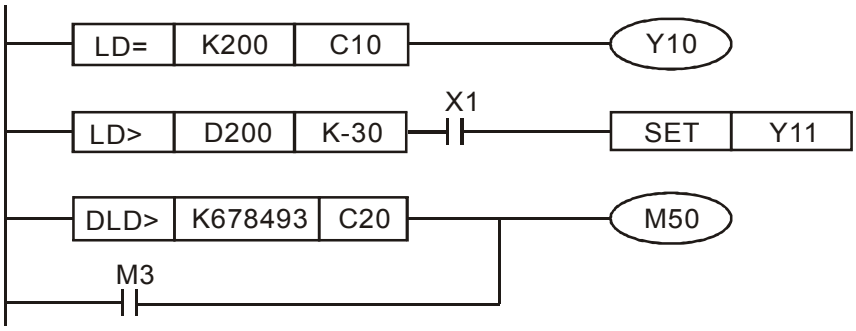

| API 232~238 | D | **AND※** | | (S1) (S2) | Contact form compare AND* |
|---|---|---|---|---|---|

| | Bit device | | | Word device | | | | | | | |
|---|---|---|---|---|---|---|---|---|---|---|---|
| | X | Y | M | K | H | KnX | KnY | KnM | T | C | D |
| S1 | | | | * | * | * | * | * | * | * | * |
| S2 | | | | * | * | * | * | * | * | * | * |

Notes on operand usage: ※ : = 、 > 、 < 、 <> 、 ≦ 、 ≧
Please refer to the function specifications table for each device in series for the scope of device usage

| 16-bit command (5 STEP) | | | |
|---|---|---|---|
| AND※ | Continuous execution type | — | — |

| 32-bit command (9 STEP) | | | |
|---|---|---|---|
| DAND※ | Continuous execution type | — | — |

Flag signal: none

Explanation

- **$S_1$**: data source device 1. **$S_2$**: data source device 2.
- This command compares the content of **$S_1$** and **$S_2$**. Taking API 232 (AND=) as an example, when the result of comparison is equal, this command will be activated; when the result of comparison is unequal, this command will not be activated.
- The AND* command is a comparison command in series with a contact.

| API No. | 16-bit commands | 32-bit commands | Conditions for activation | Conditions for inactivation |
|---|---|---|---|---|
| 232 | AND＝ | **D**AND＝ | $S_1 = S_2$ | $S_1 \neq S_2$ |
| 233 | AND＞ | **D**AND＞ | $S_1 > S_2$ | $S_1 \leqq S_2$ |
| 234 | AND＜ | **D**AND＜ | $S_1 < S_2$ | $S_1 \geqq S_2$ |
| 236 | AND＜＞ | **D**AND＜＞ | $S_1 \neq S_2$ | $S_1 = S_2$ |
| 237 | AND＜＝ | **D**AND＜＝ | $S_1 \leqq S_2$ | $S_1 > S_2$ |
| 238 | AND＞＝ | **D**AND＞＝ | $S_1 \geqq S_2$ | $S_1 < S_2$ |

Example

- When X0=On and the current value of C10 is also equal to K200, Y10=On.
- When X1=Off and the content of register D0 is not equal to K-10, Y11=On and remains in that state.
- When X2 =On and the content of the 32-bit register D0(D11)is less than 678,493, or M3=On, M50=On.

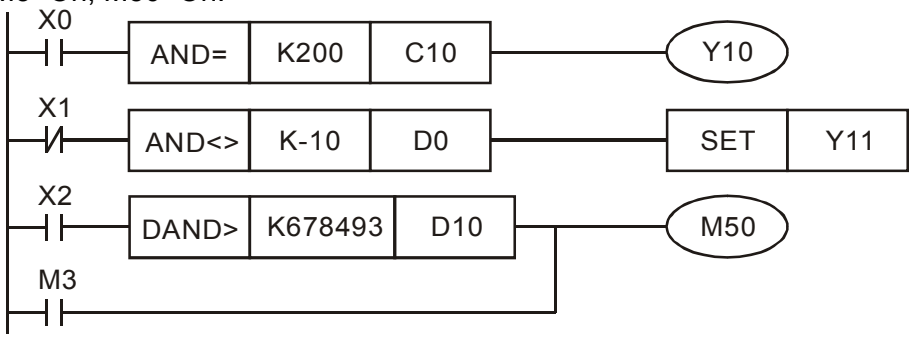

| API 240~246 | D | **OR※** | | (S1) (S2) | Contact form compare OR* |
|---|---|---|---|---|---|

| | Bit device | | | Word device | | | | | | | |
|---|---|---|---|---|---|---|---|---|---|---|---|
| | X | Y | M | K | H | KnX | KnY | KnM | T | C | D |
| S1 | | | | * | * | * | * | * | * | * | * |
| S2 | | | | * | * | * | * | * | * | * | * |

Notes on operand usage: ※ : = 、 > 、 < 、 <> 、 ≦ 、 ≧
Please refer to the function specifications table for each device in series for the scope of device usage

| 16-bit command (5 STEP) | | | |
|---|---|---|---|
| OR※ | Continuous execution type | — | — |

| 32-bit command (9 STEP) | | | |
|---|---|---|---|
| DOR※ | Continuous execution type | — | — |

Flag signal: none

Explanation

- **$S_1$**: data source device 1. **$S_2$**: data source device 2.
- This command compares the content of **$S_1$** and **$S_2$**. Taking API 240 (OR=) as an example, when the result of comparison is equal, this command will be activated; when the result of comparison is unequal, this command will not be activated.
- The OR* command is a compare command in parallel with a contact.

| API No. | 16-bit commands | 32-bit commands | Conditions for activation | Conditions for inactivation |
|---|---|---|---|---|
| 240 | OR＝ | **D**OR＝ | $S_1 = S_2$ | $S_1 \neq S_2$ |
| 241 | OR＞ | **D**OR＞ | $S_1 > S_2$ | $S_1 \leqq S_2$ |
| 242 | OR＜ | **D**OR＜ | $S_1 < S_2$ | $S_1 \geqq S_2$ |
| 244 | OR＜＞ | **D**OR＜＞ | $S_1 \neq S_2$ | $S_1 = S_2$ |
| 245 | OR＜＝ | **D**OR＜＝ | $S_1 \leqq S_2$ | $S_1 > S_2$ |
| 246 | OR＞＝ | **D**OR＞＝ | $S_1 \geqq S_2$ | $S_1 < S_2$ |

Example

- When X0=On and the current value of C10 is also equal to K200, Y10=On.
- When X1=Off and the content of register D0 is not equal to K-10, Y11=On and remains in that state.
- When X2 =On and the content of the 32-bit register D0(D11)is less than 678,493, or M3=On, M50=On.

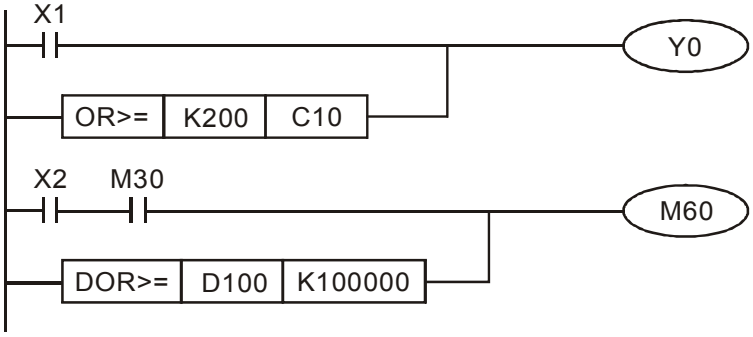

| API 275~280 | | **FLD※** | | (S1) (S2) | Floating point number contact form compare LD* |
|---|---|---|---|---|---|

| | Bit device | | | Word device | | | | | | | |
|---|---|---|---|---|---|---|---|---|---|---|---|
| | X | Y | M | K | H | KnX | KnY | KnM | T | C | D |
| S1 | | | | | | | | | * | * | * |
| S2 | | | | | | | | | * | * | * |

Notes on operand usage: # : & 、| 、^
Please refer to the function specifications table for each device in series for the scope of device usage

| 16-bit command | | | |
|---|---|---|---|
| – | – | – | – |

| 32-bit command (9 STEP) | | | |
|---|---|---|---|
| FLD※ | Continuous execution type | – | – |

Flag signal: none

Explanation

- ◆ $S_1$: data source device 1. $S_2$: data source device 2.
- ◆ This command compares the content of $S_1$ and $S_2$. Taking "FLD=" as an example, if the result of comparison is "equal," this command will be activated; but it will not be activated when the result is "unequal."
- ◆ The FLD* command can directly input floating point numerical values (for instance: F1.2) to the $S_1$, $S_2$ operands, or store floating-point numbers in register D for use in operations.
- ◆ This command can be used while directly connected with the busbar

| API No. | 32-bit commands | Conditions for activation | Conditions for inactivation |
|---|---|---|---|
| 275 | FLD＝ | $S_1 = S_2$ | $S_1 \neq S_2$ |
| 276 | FLD＞ | $S_1 > S_2$ | $S_1 \leqq S_2$ |
| 277 | FLD＜ | $S_1 < S_2$ | $S_1 \geqq S_2$ |
| 278 | FLD＜＞ | $S_1 \neq S_2$ | $S_1 = S_2$ |
| 279 | FLD＜＝ | $S_1 \leqq S_2$ | $S_1 > S_2$ |
| 280 | FLD＞＝ | $S_1 \geqq S_2$ | $S_1 < S_2$ |

Example

- ◆ When the floating point number of register D200 (D201) is less than or equal to F1.2, and X1 activated, contact Y21 will be activated and remain in that state.

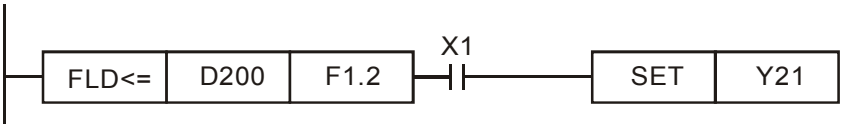

| API 281~286 | | **FAND※** | | (S1) (S2) | Floating point number contact form compare AND* |
|---|---|---|---|---|---|

| | Bit device | | | Word device | | | | | | | |
|---|---|---|---|---|---|---|---|---|---|---|---|
| | X | Y | M | K | H | KnX | KnY | KnM | T | C | D |
| S1 | | | | | | | | | ∗ | ∗ | ∗ |
| S2 | | | | | | | | | ∗ | ∗ | ∗ |

Notes on operand usage: #：&、|、^
Please refer to the function specifications table for each device in series for the scope of device usage

| 16-bit command | | | |
|---|---|---|---|
| – | – | – | – |

| 32-bit command (9 STEP) | | | |
|---|---|---|---|
| FAND※ | Continuous execution type | – | – |

Flag signal: none

Explanation

- ◆ $S_1$: data source device 1. $S_2$: data source device 2.
- ◆ This command compares the content of $S_1$ and $S_2$. Taking "FAND=" as an example, if the result of comparison is "equal," this command will be activated; but it will not be activated when the result is "unequal."
- ◆ The FAND* command can directly input floating point numerical values (for instance: F1.2) to the $S_1$, $S_2$ operands, or store floating-point numbers in register D for use in operations.
- ◆ This command can be used while directly connected with the busbar

| API No. | 32-bit commands | Conditions for activation | Conditions for inactivation |
|---|---|---|---|
| 281 | FAND | $S_1 = S_2$ | $S_1 \neq S_2$ |
| 282 | FAND＞ | $S_1 > S_2$ | $S_1 \leqq S_2$ |
| 283 | FAND＜ | $S_1 < S_2$ | $S_1 \geqq S_2$ |
| 284 | FAND＜＞ | $S_1 \neq S_2$ | $S_1 = S_2$ |
| 285 | FAND＜＝ | $S_1 \leqq S_2$ | $S_1 > S_2$ |
| 286 | FAND＞＝ | $S_1 \geqq S_2$ | $S_1 < S_2$ |

Example

- ◆ When X1=Off, and the floating point number in register D100 (D101) is not equal to F1.2, Y21=On and remains in that state.

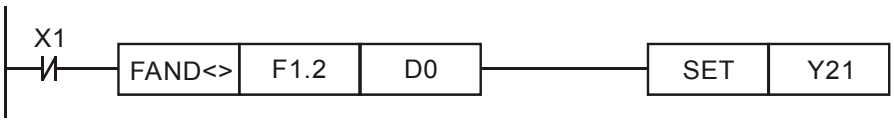

| API 287~292 | | **FOR※** | | (S1) (S2) | Floating point number contact form compare OR* |
|---|---|---|---|---|---|

| | Bit device | | | Word device | | | | | | | |
|---|---|---|---|---|---|---|---|---|---|---|---|
| | X | Y | M | K | H | KnX | KnY | KnM | T | C | D |
| S1 | | | | | | | | | * | * | * |
| S2 | | | | | | | | | * | * | * |

Notes on operand usage: #：&、|、^
Please refer to the function specifications table for each device in series for the scope of device usage

16-bit command

| — | — | — | — |
|---|---|---|---|

32-bit command (9 STEP)

| FOR※ | Continuous execution type | — | — |
|---|---|---|---|

Flag signal: none

Explanation

- ◆ $S_1$: data source device 1. $S_2$: data source device 2.
- ◆ This command compares the content of $S_1$ and $S_2$. Taking "FOR=" as an example, if the result of comparison is "equal," this command will be activated; but it will not be activated when the result is "unequal."
- ◆ The FOR* command can directly input floating point numerical values (for instance: F1.2) to the $S_1$, $S_2$ operands, or store floating-point numbers in register D for use in operations.
- ◆ This command can be used while directly connected with the busbar

| API No. | 32-bit commands | Conditions for activation | Conditions for inactivation |
|---|---|---|---|
| 287 | FOR＝ | $S_1 = S_2$ | $S_1 \neq S_2$ |
| 288 | FOR＞ | $S_1 > S_2$ | $S_1 \leqq S_2$ |
| 289 | FOR＜ | $S_1 < S_2$ | $S_1 \geqq S_2$ |
| 290 | FOR＜＞ | $S_1 \neq S_2$ | $S_1 = S_2$ |
| 291 | FOR＜＝ | $S_1 \leqq S_2$ | $S_1 > S_2$ |
| 292 | FOR＞＝ | $S_1 \geqq S_2$ | $S_1 < S_2$ |

Example

- ◆ When X2 and M30 are both equal to "On," or the floating point number in register D100 (D101) is greater than or equal to F1.234, M60=On.

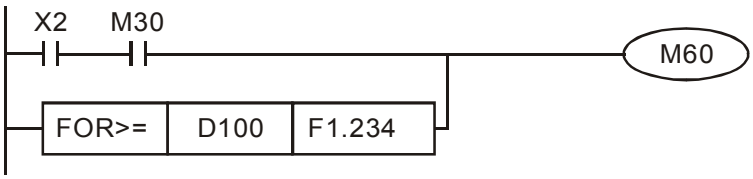

# 16-6-5 Detailed explanation of driver special applications commands

| API 139 | | RPR | P | (S1) (S2) | Read servo parameter |
|---|---|---|---|---|---|

| | Bit device | | | Word device | | | | | | | |
|---|---|---|---|---|---|---|---|---|---|---|---|
| | X | Y | M | K | H | KnX | KnY | KnM | T | C | D |
| S1 | | | | * | * | | | | | | * |
| S2 | | | | | | | | | | | * |

Notes on operand usage: none

16-bit command (5 STEP)

| RPR | Continuous execution type | RPRP | Pulse execution type |
|---|---|---|---|

32-bit command

| — | — | — | — |
|---|---|---|---|

Flag signal: none

Explanation

■ (S1): Parameter address of data to be read. (S2): Register where data to be read is stored.

| API 140 | | WPR | P | (S1) (S2) | Write servo parameter |
|---|---|---|---|---|---|

| | Bit device | | | Word device | | | | | | | |
|---|---|---|---|---|---|---|---|---|---|---|---|
| | X | Y | M | K | H | KnX | KnY | KnM | T | C | D |
| S1 | | | | * | * | | | | | | * |
| S2 | | | | * | * | | | | | | * |

Notes on operand usage: none

16-bit command (5 STEP)

| WPR | Continuous execution type | WPRP | Pulse execution type |
|---|---|---|---|

32-bit command

| — | — | — | — |
|---|---|---|---|

Flag signal: none

Explanation

■ (S1): Data to write to specified page. (S2): Parameter address of data to be written.

Example

■ When the data in the CP2000 driver's parameter H01.00 is read and written to D0, data from H01.01 will be read and written to D1.
■ When M0=On, the content of D10 will be written to the CP2000 driver parameter 04.00 (first speed of multiple speed levels).
■ When the parameter has been written successfully, M1017=On.
■ The CP2000's WPR command does not support writing to the 20XX address, but the RPR command supports reading of 21XX, 22XX.

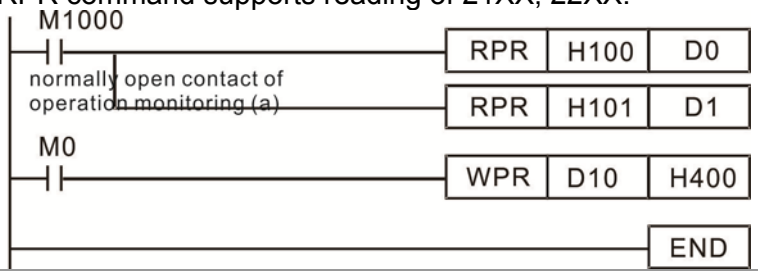


Recommendation Take care when using the WPR command. When writing parameters, because most parameters are recorded as they are written, these parameters may only be revised 109 times; a memory write error may occur if parameters are written more than $10^9$ times.

Because the following commonly-used parameters have special processing, there are **no** restrictions on the number of times they may be written.

P00-10: Control method

P00-11: Speed mode selection

P00-12: P2P position mode

P00-13: Torque mode select

P00-27: User-defined value

P01-12: Acceleration time 1

P01-13: Deceleration time 1

P01-14: Acceleration time 2

P01-15: Deceleration time 2

P01-16: Acceleration time 3

P01-17: Deceleration time 3

P01-18: Acceleration time 4

P01-19: Deceleration time 4

P02-12: Select MI Conversion Time mode:

P02-18: Select MO Conversion Time mode:

P04-50 ~ P04-69: PLC register parameter 0 - 19

P08-04: Upper limit of integral

P08-05: PID output upper limit

P10-17: Electronic gear A

P10-18: Electronic gear B

P11-34: Torque command

P11-43: P2P highest frequency

P11-44: Position control acceleration time

P11-45: Position control deceleration time

Calculation of the number of times written is based on whether the written value is modified. For instance, writing the same value 100 times at the same time counts as writing only once.

When writing a PLC program, if unsure of usage of the WPR command, we recommend that you use the WPRP command.

| API 141 | | **FPID** | **P** | (S1) (S2) (S3) (S4) | Driver PID control mode |
|---|---|---|---|---|---|

| | Bit device | | | Word device | | | | | | | |
|---|---|---|---|---|---|---|---|---|---|---|---|
| | X | Y | M | K | H | KnX | KnY | KnM | T | C | D |
| S1 | | | | * | * | | | | | | * |
| S2 | | | | * | * | | | | | | * |
| S3 | | | | * | * | | | | | | * |
| S4 | | | | * | * | | | | | | * |

Notes on operand usage: none

16-bit command (9 STEP)

| FPID | Continuous execution type | FPIDP | Pulse execution type |
|---|---|---|---|

32-bit command

| — | — | — | — |
|---|---|---|---|

Flag signal: none

**Explanation**

- (S1): PID reference target value input terminal select. (S2): PID function proportional gain P. (S3): PID function integral time I. (S4): PID function differential time D.
- The FPID command can directly control the driver's feedback control of PID parameter 08-00 PID reference target value input terminal selection, 08-01 proposal gain P, 08-02 integral time I, and 08-03 differential time D.

**Example**

- When M0=On, the set PID reference target value input terminal selection is 0 (no PID function), the PID function proportional gain P is 0, the PID function integral time I is 1 (units: 0.01 sec.), and the PID function differential time D is 1 (units: 0.01 sec.).
- When M1=On, the set PID reference target value input terminal selection is 0 (no PID function), the PID function proportional gain P is 1 (units: 0.01), the PID function integral time I is 0, and the PID function differential time D is 0.
- When M2=On, the set PID reference target value input terminal selection is 1 (target frequency input is controlled from the digital keypad), the PID function proportional gain P is 1 (units: 0.01), the PID function integral time I is 0, and the PID function differential time D is 0.
- D1027: Frequency command after PID operation.

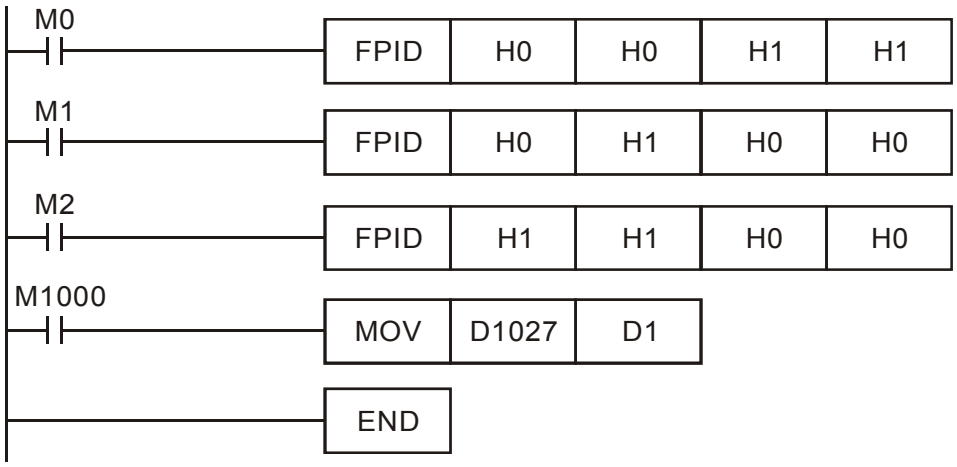

| API 142 | | **FREQ** | **P** | (S1) (S2) (S3) | Driver speed control mode |
|---|---|---|---|---|---|

| | Bit device | | | Word device | | | | | | | |
|---|---|---|---|---|---|---|---|---|---|---|---|
| | X | Y | M | K | H | KnX | KnY | KnM | T | C | D |
| S1 | | | | * | * | | | | | | * |
| S2 | | | | * | * | | | | | | * |
| S3 | | | | * | * | | | | | | * |

Notes on operand usage: none

| 16-bit command (7 STEP) | | | |
|---|---|---|---|
| FREQ | Continuous execution type | FREQP | Pulse execution type |
| 32-bit command | | | |
| — | — | — | — |

Flag signal: M1015

**Explanation**

- (S1): Frequency command. (S2): Acceleration time. (S3): Deceleration time
- S2,S3: In acceleration/deceleration time settings, the number of decimal places is determined by the definitions of Pr01-45.

Example
When 01-45=0: units of 0.01 sec.
The setting of 50 for S2 (acceleration time) in the ladder diagram below implies 0.5 sec, and the S3 (deceleration time) setting of 60 implies 0.6 sec

- The FREQ command can control driver frequency commands, and acceleration and deceleration time; it also uses special register control actions, such as:
  M1025: Control driver RUN(On)/STOP(Off) (RUN requires Servo On (M1040 On) to be effective)
  M1026: Control driver operating direction FWD(Off)/REV(On)
  M1040: Control Servo On/Servo Off.
  M1042: Trigger quick stop (ON)/does not trigger quick stop (Off).
  M1044: Pause (On)/release pause (Off)
  M1052: Lock frequency (On)/release lock frequency (Off)

**Example**

- M1025: Driver RUN(On)/STOP(Off), M1026: driver operating direction FWD(Off)/REV(On). M1015: frequency reached.
- When M10=On, sets the driver frequency command K300(3.00Hz), with an acceleration/deceleration time of 0.
  When M11=On, sets the driver frequency command K3000 (30.00Hz), with an acceleration time of 50 (0.5 sec.) and deceleration time of 60 (0.6 sec.). (When 01-45=0)
- When M11=Off, the driver frequency command will now change to 0

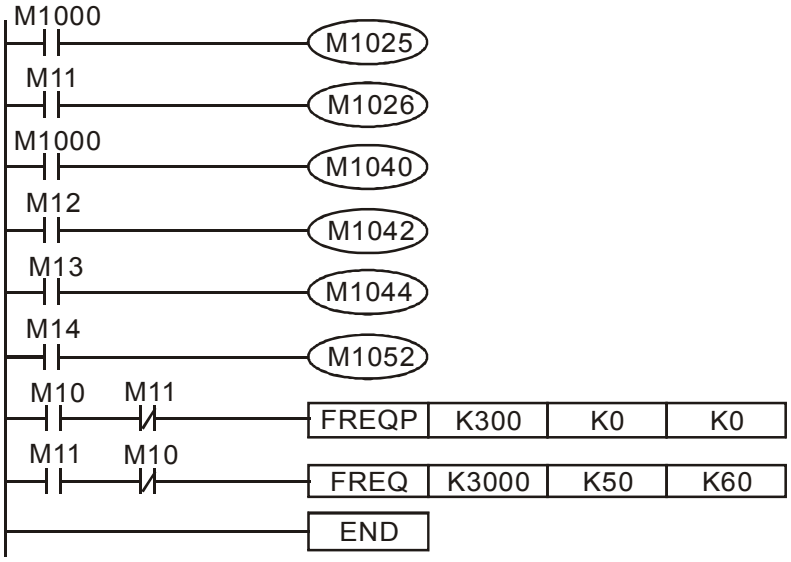


- Parameter 09-33 are defined on the basis of whether reference commands have been cleared before PLC operation

  Bit 0 : Prior to PLC scanning procedures, whether the target frequency has been cleared is 0. (This will be written to the FREQ command when the PLC is On)

Bit 1 : Prior to PLC scanning procedures, whether the target torque has been cleared is 0. (This will be written to the TORQ command when the PLC is On)

Bit 2 : Prior to PLC scanning procedures, whether speed limits in the torque mode have been cleared is 0. (This will be written to the TORQ command when the PLC is On)

Example: When using r to write a program,

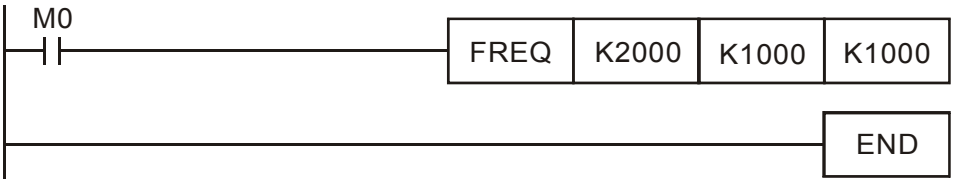


if we force M0 to be 1, the frequency command will be 20.00 Hz; but when M0 is set as 0, there will be a different situation.

Case 1: When the 09-33 bit 0 is 0, and M0 is set as 0, the frequency command will remain at 20.00Hz.

Case 2: When the 09-33 bit 0 is 1, and M0 is set as 0, the frequency command will change to 0.00Hz

The reason for this is that when the 09-33 bit 0 is 1 prior to PLC scanning procedures, the frequency will first revert to 0.

When the 09-33 bit 0 is 0, the frequency will not revert to 0.

| API 261 | CANRX P | (S1) (S2) (S3) (D) | Read CANopen slave station data |
|---|---|---|---|

| | Bit device | | | Word device | | | | | | | |
|---|---|---|---|---|---|---|---|---|---|---|---|
| | X | Y | M | K | H | KnX | KnY | KnM | T | C | D |
| S1 | | | | * | * | | | | | | |
| S2 | | | | * | * | | | | | | |
| S3 | | | | * | * | | | | | | |
| D | | | | | | | | | * | * | * |

Notes on operand usage: none

| 16-bit command (9 STEP) | | | |
|---|---|---|---|
| CANRX | Continuous execution type | CANRXP | Pulse execution type |
| 32-bit command | | | |
| — | — | — | — |

Flag signal

**Explanation**

- (S1): Slave station number. (S2): Main index.. (S3): Subindex+bit length. (D): Preset address.
- The CANRX command can read the index of the corresponding slave station. When it is executed, it will send the SDO message format to the slave station. M1066 and M1067 will both be 0 at that time, and M1066 will be set as 1 after reading. If the slave station gives the correct response, it will write the value to the preset register, and set M1067 as 1. If the slave station has a response error, M1067 will be set as 0, and an error message will be recorded to D1076 to D1079.

**Example**

M1002: When the PLC runs, the command will be triggered once and will set K4M400 = K1

Afterwards, each time M1066 is 1, it will switch to a different message.

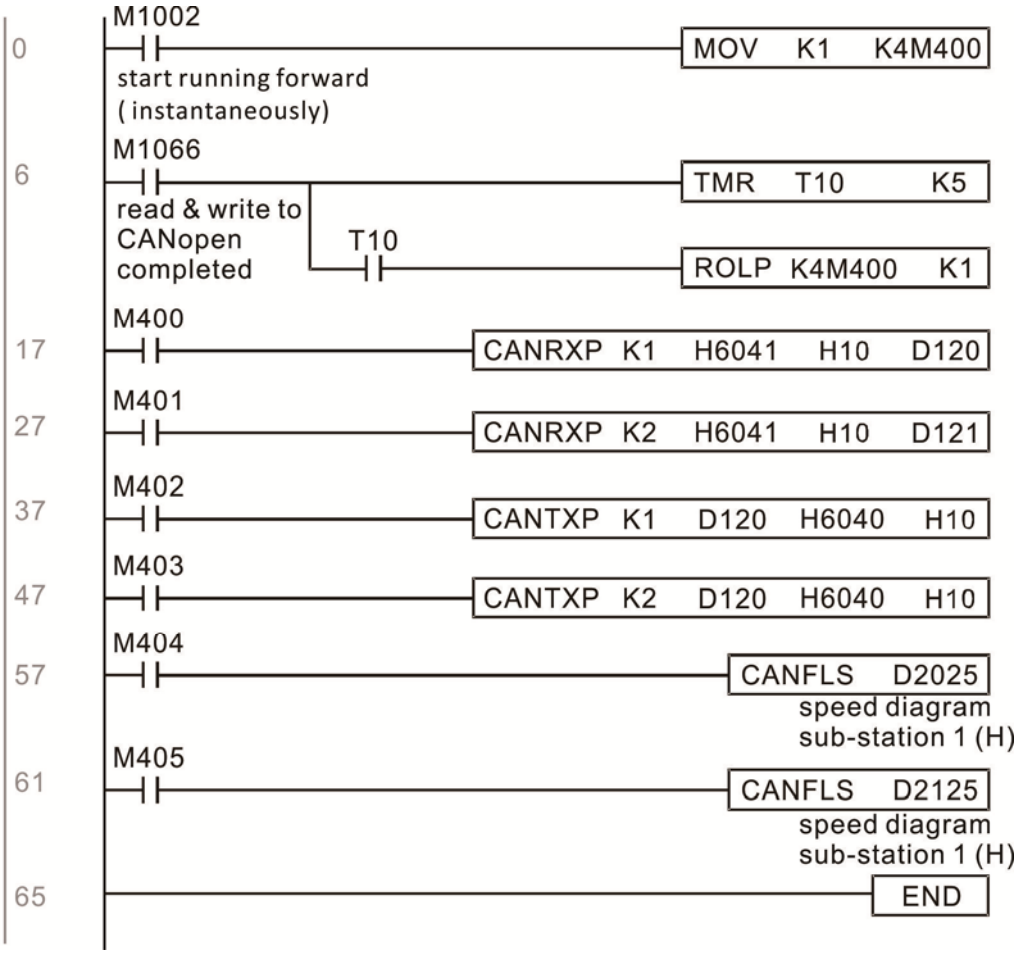

| API 264 | | **CANTX** | P | (S1) (S2) (S3) (S4) | Write CANopen slave station data |
|---|---|---|---|---|---|

| | Bit device | | | Word device | | | | | | | |
|---|---|---|---|---|---|---|---|---|---|---|---|
| | X | Y | M | K | H | KnX | KnY | KnM | T | C | D |
| S1 | | | | * | * | | | | | | |
| S2 | | | | * | * | | | | * | * | * |
| S3 | | | | * | * | | | | | | |
| S4 | | | | * | * | | | | | | |

Notes on operand usage: none

16-bit command (9 STEP)

| CANTX | Continuous execution type | CANTXP | Pulse execution type |
|---|---|---|---|

32-bit command

| — | — | — | — |
|---|---|---|---|

Flag signal

Explanation

- (S1): Slave station number. (S2): Address to be written. (S3): Main index. (S4): Subindex+bit length.
- The CANTX command can write a value to the index of the corresponding slave station. When it is executed, it will send the SDO message format to the slave station. M1066 and M1067 will both be 0 at that time, and M1066 will be set as 1 after reading. If the slave station gives the correct response, it will write the value to the preset register, and set M1067 as 1. If the slave station has a response error, M1067 will be set as 0, and an error message will be recorded to D1076 to D1079.

| API 265 | | **CANFLS** | P | (D) | Refresh special D corresponding to CANopen |
|---|---|---|---|---|---|

| | Bit device | | | Word device | | | | | | | |
|---|---|---|---|---|---|---|---|---|---|---|---|
| | X | Y | M | K | H | KnX | KnY | KnM | T | C | D |
| D | | | | * | * | | | | | | |

Notes on operand usage: none

16-bit command (3 STEP)

| CANFLS | Continuous execution type | CANFLSP | Pulse execution type |
|---|---|---|---|

32-bit command

| — | — | — | — |
|---|---|---|---|

Flag signal

Explanation

- (D): Special D to be refreshed.
- The CANFLS command can refresh special D commands. When is a read only attribute, executing this command will send a message equivalent to that of CANRX to the slave station, and the number of the slave station will be transmitted back and refreshed to this special D. When there is a read/write attribute, executing this command will send a message equivalent to that of CANTX to the slave station, and the value of this special D will be written to the corresponding slave station.
- When M1066 and M1067 are both 0, and M1066 is set as 1 after reading, if the slave station gives a correct response, the value will be written to the designated register, and M1067 will be set as 1. If the slave station's response contains an error, then M1067 will be set as 0, and an error message will be recorded to D1076-D1079.

| API 320 | D | **ICOMR** | P | (S1)(S2)(S3)(D) | Internal communications read |
|---|---|---|---|---|---|

| | Bit device | | | Word device | | | | | | | |
|---|---|---|---|---|---|---|---|---|---|---|---|
| | X | Y | M | K | H | KnX | KnY | KnM | T | C | D |
| S1 | | | | * | * | | | | | | * |
| S2 | | | | * | * | | | | | | * |
| S3 | | | | * | * | | | | | | * |
| D | | | | * | * | | | | | | * |

Notes on operand usage: none

16-bit command (9 STEP)

| ICOMR | Continuous execution type | ICOMRP | Pulse execution type |
|---|---|---|---|

32-bit command (17 STEP)

| DICOMR | Continuous execution type | DICOMRP | Pulse execution type |
|---|---|---|---|

Flag signal: M1077 M1078 M1079

Explanation

(S1): Selection of slave device. (S2): Device selection (0: converter, 1: internal PLC). (S3): Read address. (D): Saving target.

- The ICOMR command can obtain the slave station's converter and the internal PLC's register value.

| API 321 | D | **ICOMW** | P | (S1) (S2) (S3) (D) | Internal communications write |
|---|---|---|---|---|---|

| | Bit device | | | Word device | | | | | | | |
|---|---|---|---|---|---|---|---|---|---|---|---|
| | X | Y | M | K | H | KnX | KnY | KnM | T | C | D |
| S1 | | | | * | * | | | | | | * |
| S2 | | | | * | * | | | | | | * |
| S3 | | | | * | * | | | | | | * |
| D | | | | * | * | | | | | | * |

Notes on operand usage: none

16-bit command (9 STEP)

| ICOMW | Continuous execution type | ICOMWP | Pulse execution type |
|---|---|---|---|

32-bit command (17 STEP)

| DICOMW | Continuous execution type | DICOMWP | Pulse execution type |
|---|---|---|---|

Flag signal: M1077 M1078 M1079

**Explanation**

(S1): Selection of slave device. (S2): Device selection (0: converter, 1: internal PLC). (S3): Read address. (D): Saving target.

- The ICOMW command write a value to the slave station's converter and the internal PLC's register.

**Example**

Please refer to the following example:

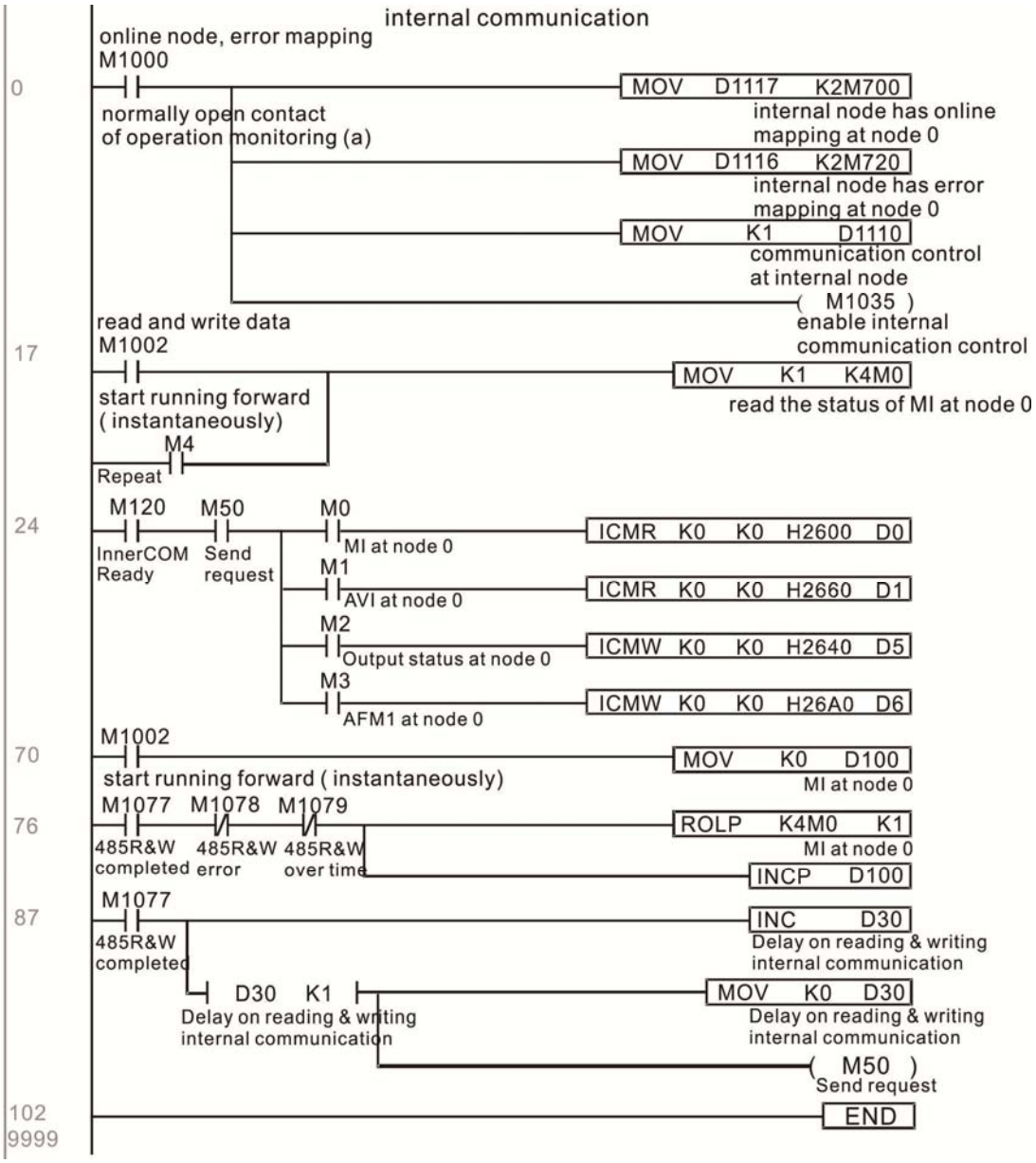

# 16-7 Error display and handling

| Code | ID | Descript | Recommended handling approach |
|---|---|---|---|
| PLrA | 47 | RTC time check | Turn power on and off when resetting the keypad time |
| PLrt | 49 | (incorrect RTC mode) | Turn power on and off after making sure that the keypad is securely connected |
| PLod | 50 | Data writing memory error | Check whether the program has an error and download the program again |
| PLSv | 51 | Data write memory error during program execution | Restart power and download the program again |
| PLdA | 52 | Program transmission error | Try uploading again; if the error persists, sent to the manufacturer for service |
| PLFn | 53 | Command error while downloading program | Check whether the program has an error and download the program again |
| PLor | 54 | Program exceeds memory capacity or no program | Restart power and download the program again |
| PLFF | 55 | Command error during program execution | Check whether the program has an error and download the program again |
| PLSn | 56 | Check code error | Check whether the program has an error and download the program again |
| PLEd | 57 | Program has no END stop command | Check whether the program has an error and download the program again |
| PLCr | 58 | MC command has been used continuously more than nine times | Check whether the program has an error and download the program again |
| PLdF | 59 | Download program error | Check whether the program has an error and download again |
| PLSF | 60 | PLC scan time excessively long | Check whether the program code has a writing error and download again |

# 16- 8 CANopen Master control applications

Control of a simple multi-axis application is required in certain situations. If the device supports the CANopen protocol, a CP2000 can serve as the master in implementing simple control (position, speed, homing, and torque control). The setting method comprises the following seven steps:

## Step 1: Activating CANopen Master functions

1. Parameter 09-45=1 (initiates Master functions); restart power after completing setting, the status bar on the KPC-CC01 digital keypad will display "CAN Master".
2. Parameter 00-02=6 reset PLC (please note that this action will reset the program and PLC registers to the default values)
3. Turn power off and on again.
4. Use the KPC-CC01 digital keypad to set the PLC control mode as **"PLC Stop"** (if the KPC-CE01 digital keypad is used, set as "PLC 2"; if a newly-introduced driver is used, the blank internal PLC program will cause a PLFF warning code to be issued).

## Step 2: Master memory settings

1. After connecting the 485 communications cable, use WPL Soft to set the PLC **status** as Stop (if the PLC mode has been switched to the **"PLC Stop"** mode, the PLC **status** should already be Stop)
2. Set the address and corresponding station number of the slave station to be controlled. For instance, if it is wished to control two slave stations (a maximum of 8 stations can be controlled simultaneously), and the station numbers are 21 and 22, it is only necessary to set D2000 and D2100 as 20 and 21, and then set D2200, D2300, D2400, D2500, D2600, and D2700 as 0. The setting method involves use of the PLC's WPL editing software WPL as follows:
   - Open WPL and implement **communications > register edit (T C D)** function

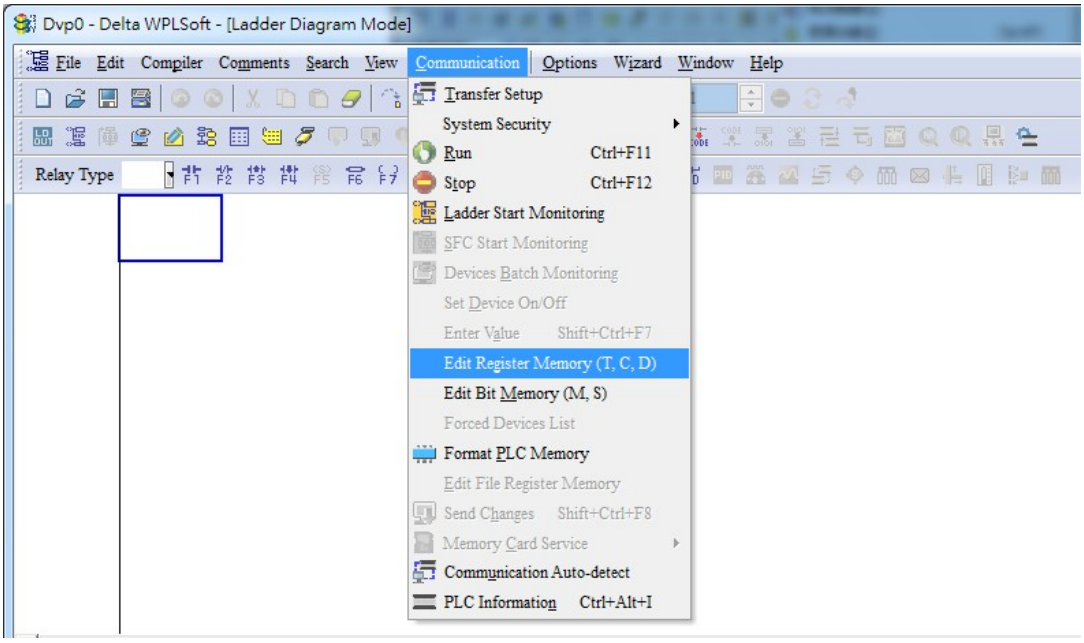

■ After leaving the PLC register window, the register setting screen will appear, as shown below:

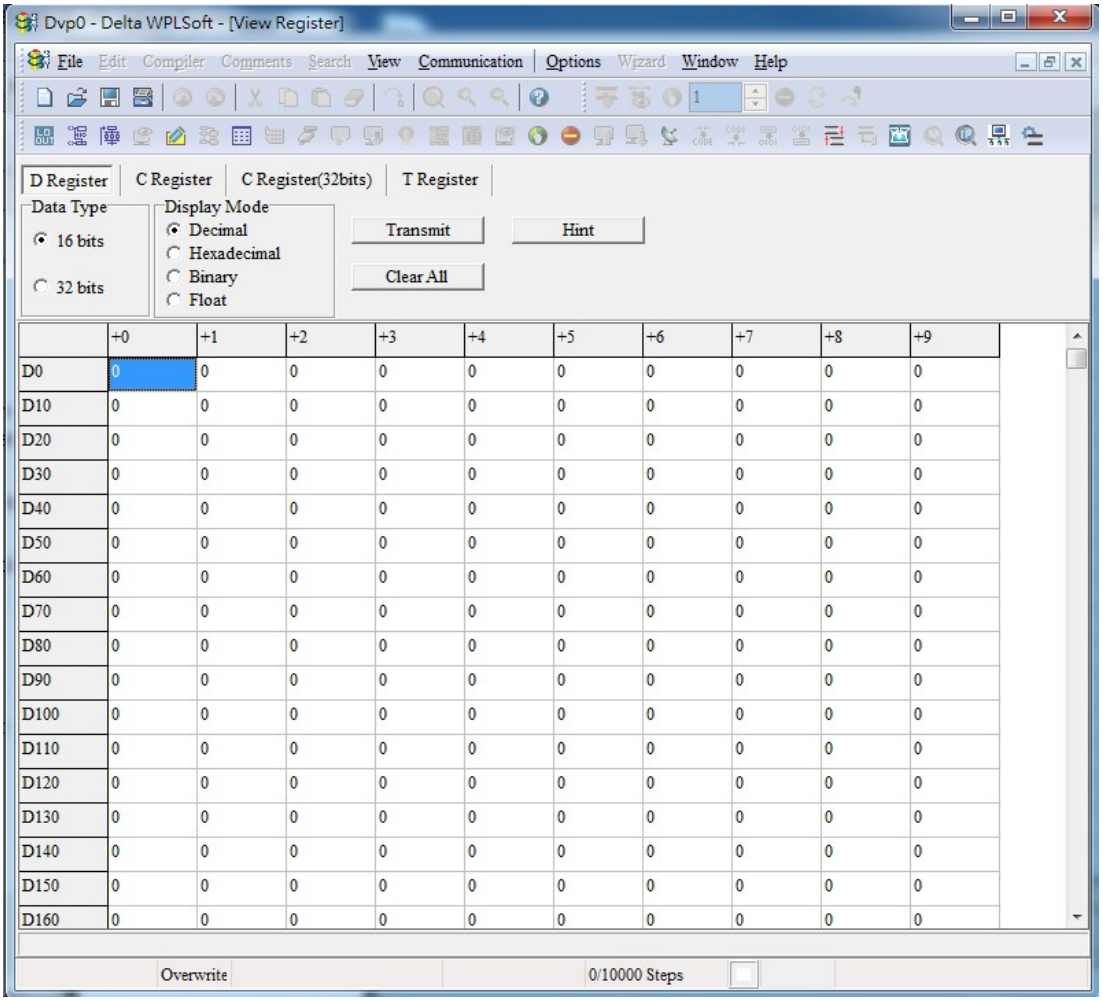


If there is a new PLC program and no settings have yet been made, you can read default data from the converter, and merely edit it to suit the current application. If settings have already been made, however, the special D in the CANopen area will display the saved status (the CANopen D area is located at D1090 to D1099 and D2000 to D2799). Assuming it is a new program, we will first read the default data from the converter; check the communications format if there is no communications link (the default PLC station number is 2, 9600, 7N2, ASCII). Perform the following steps: 1. Switch the PLC to Stop status; 2. Press the transmit button; 3. click on read memory after exiting the window; 4. Ignore D0-D399; and 5. click on the confirm button.)

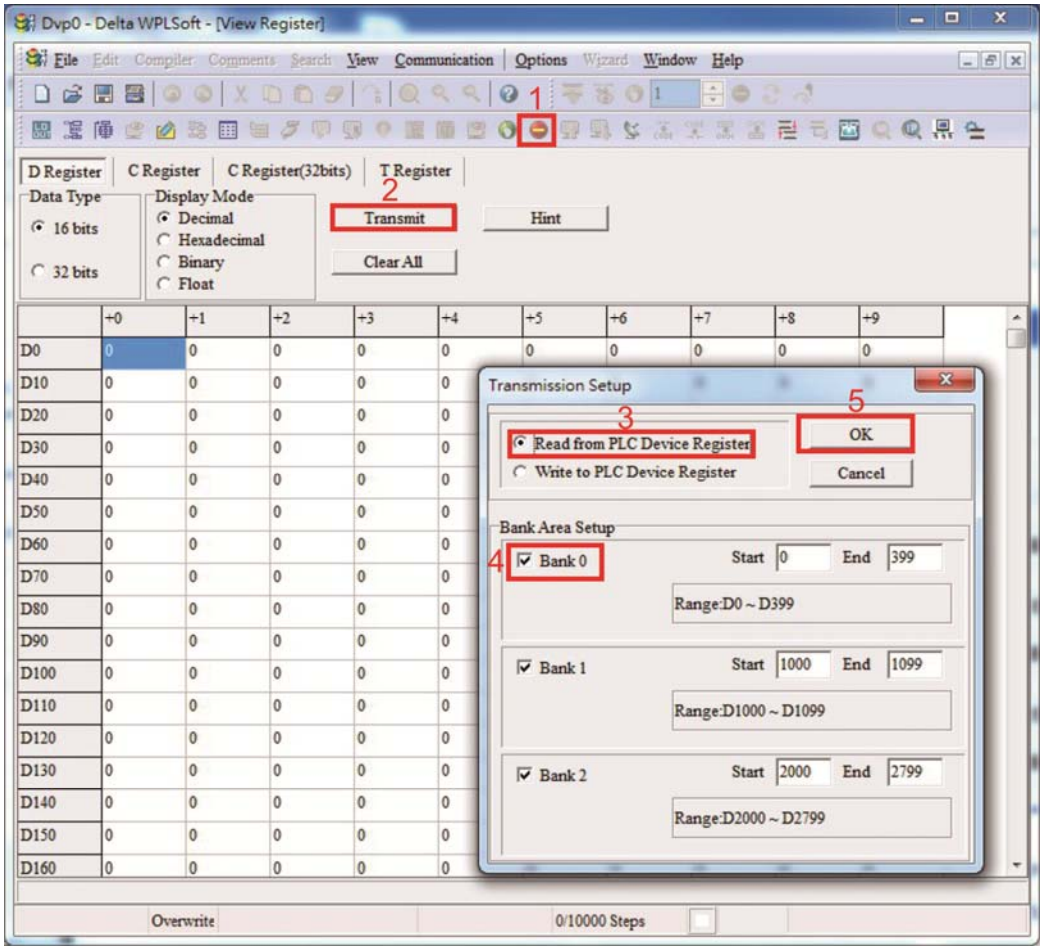


After reading the data, it is necessary to perform some special D settings. Before proceeding, we will first introduce the special D implications and setting range. The CANopen Master's special D range is currently D1070 to D1099 and D2000 to D2799; this range is divided into 3 blocks:

The first block is used to display CANopen's current status, and has a range of D1070 to D1089; the second block is used for CANopen's basic settings, and has a range of D1090 to D1099;
the third block is the slave station mapping and control area, and has a range of D2000 to D2799;
These areas are therefore introduced as follows:

The first contains the current CANopen status display:

When the master initializes a slave station, we can from find out from D1070 whether configuration of the slave device has been completed; we can find out whether an error occurred in the configuration process from D1071 and whether the configuration is inappropriate from D1074.
After entering normal control, we can find out whether the slave device is offline from D1073. In addition, we can check the slave device's read/write information using the CANRX, CANTX, and CANFLS commands; error information can be obtained from D1076 to D1079 if there has been a read/write failure.

| Special D | Description of Function | R/W |
|---|---|---|
| D1070 | Channel opened by CANopen initialization (bit0=Machine code0 …….) | R |
| D1071 | Error channel occurring in CANopen initialization process (bit0=Machine code0 …….) | R |
| D1072 | Reserved | - |
| D1073 | CANopen break channel (bit0=Machine code0 …….) | R |

| Special D | Description of Function | R/W |
|---|---|---|
| D1074 | Error code of master error<br>0: No error<br>1: Slave station setting error<br>2: Synchronizing cycle setting error (too small) | R |
| D1075 | Reserved | - |
| D1076 | SDO error message (main index value) | R |
| D1077 | SDO error message (secondary index value) | R |
| D1078 | SDO error message (error code L) | R |
| D1079 | SDO error message (error code H) | R |

The second area is for basic CANopen settings: (the PLC must have **stopped** when this area is used to make settings)

We must set the information exchange time for the master and slave station,

| Special D | Description of Function | Default: | R/W |
|---|---|---|---|
| D1090 | Synchronizing cycle setting | 4 | RW |

Use D1090 to perform settings; setting time relationships include:

$$\text{Sync time} \geq \frac{1M}{Rate} * \frac{N}{4}$$

**N: TXPDO + RXPDO**

For instance, when communications speed is 500K, TXPDO + RXPDO have 8 sets, and synchronizing time will require more than 4 ms

We must also define how many slave stations will be open. D1091 is the channel for defining station opening, and D2000+100*n is the station number defining this channel. See the detailed explanation below.

Slave station number **n**=0-7

| Special D | Description of Function | R/W |
|---|---|---|
| D1091 | Sets slave station On or Off (bit 0-bit 7 correspond to slave stations number 0-7) | RW |
| D2000+100***n** | Slave station number | RW |

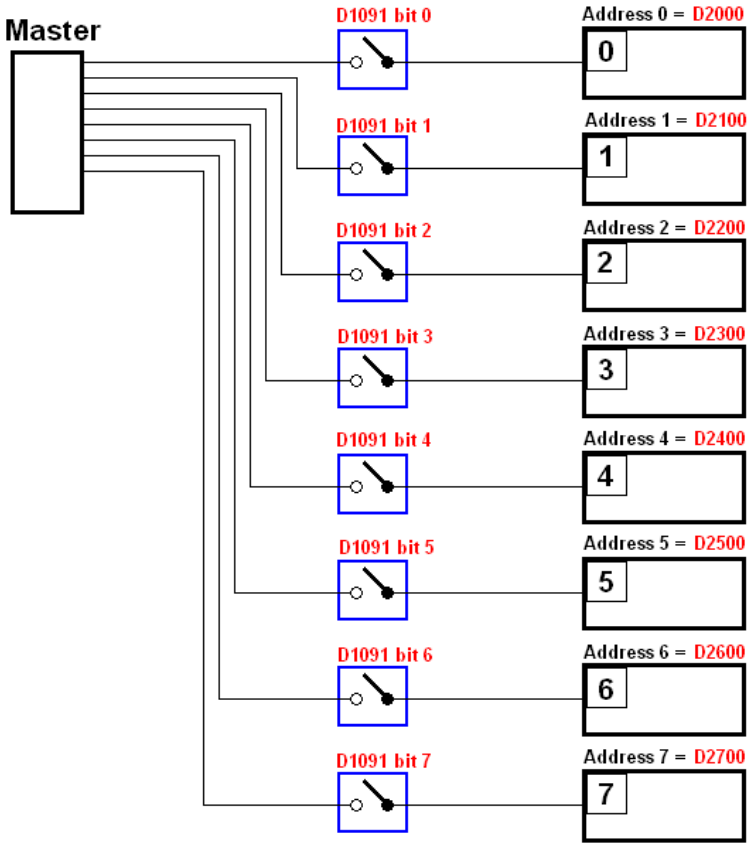

If slave devices have a slow start-up, the master can delay for a short time before performing slave station configuration; this time delay can be set via D1092.

| Special D | Description of Function | Default: | R/W |
|---|---|---|---|
| D1092 | Delay before start of initialization | 0 | RW |

With regard to slave device initialization, a delay time can be set to judge whether failure has occurred. If the communications speed is relatively slow, the delay time can be adjusted to judge whether initialization has been completed, which will ensure that there is time to perform slave device initialization.

| Special D | Description of Function | Default: | R/W |
|---|---|---|---|
| D1099 | Initialization completion delay time<br>Setting range: 1 to 60000 sec | 15 sec. | RW |

After communication is successful, the system must detect whether there is a break in communications with the slave station. D1093 is used to set detection time, and D1094 sets the number of consecutive errors that will trigger a break error.

| Special D | Description of Function | Default: | R/W |
|---|---|---|---|
| D1093 | Break time detection | 1000ms | RW |
| D1094 | Break number detection | 3 | RW |

The packet type transmitted by PDO is set before establishing normal communications and generally does not require adjustment.

| Special D | Description of Function | Default: | R/W |
|---|---|---|---|
| D1097 | Corresponding real-time transmission type (PDO)<br>Setting range: 1~240 | 1 | RW |
| D1098 | Corresponding real-time receiving type (PDO)<br>Setting range: 1~240 | 1 | RW |

The third block is the slave station mapping and control area.

CANopen provides a PDO method to perform mapping of the master and slave station memory, and enables the master to directly access read/write data in a certain memory area. The master will automatically perform data exchange with the corresponding slave device, and the read/write values can be seen directly from the special D area after real-time exchange (M1034 = 1 time) has been established. The CP2000 currently supports real-time mapping of four PDOs, and there are two types of PDO RXPDO (reads slave device information) and TXPDO (writes to slave device). In addition, in order to facilitate control, the CP2000 cannot perform mapping of commonly-used registers; the following is an overview of the current PDO mapping situation:

| **TX PDO** | | | | | | | |
|---|---|---|---|---|---|---|---|
| **PDO4 (Torque)** | | **PDO3 (Position)** | | **PDO2 (Remote I/O)** | | **PDO1 (Speed)** | |
| Description | Special D | Description | Special D | Description | Special D | Description | Special D |
| Controller word | D2008+100*n | Controller word | D2008+100*n | Slave device DO | D2027+100*n | Controller word | D2008+100*n |
| Target torque | D2017+100*n | Target position | D2020+100*n<br>D2021+100*n | Slave device AO1 | D2031+100*n | Target speed | D2012+100*n |
| Control mode | D2010+100*n | Control mode | D2010+100*n | Slave device AO2 | D2032+100*n | | |
| | | | | Slave device AO3 | D2033+100*n | | |

| RXPDO | | | | | | | |
|---|---|---|---|---|---|---|---|
| **PDO4 (Torque)** | | **PDO3 (Position)** | | **PDO2 (Remote I/O)** | | **PDO1 (Speed)** | |
| Description | Special D | Description | Special D | Description | Special D | Description | Special D |
| Mode word | D2009+100*n | Mode word | D2009+100*n | Slave device DI | D2026+100*n | Mode word | D2009+100*n |
| Actual torque | D2018+100*n | Actual position | D2022+100*n<br>D2023+100*n | Slave device AI1 | D2028+100*n | Actual frequency | D2013+100*n |
| Actual mode | D2011+100*n | Actual mode | D2011+100*n | Slave device AI2 | D2029+100*n | | |
| | | | | Slave device AI3 | D2030+100*n | | |

Because usage requires only simple to open the corresponding PDO, where TXPDO employs D2034+100*n settings and RXPDO employs D2067+100*n settings.

These two special D areas are defined as follows:

| | PDO4 | | PDO3 | | PDO2 | | PDO1 | |
|---|---|---|---|---|---|---|---|---|
| Default definition | Torque | | Position | | Remote I/O | | Speed | |
| bit | 15 | 14 ~ 12 | 11 | 10 ~ 8 | 7 | 6 ~ 4 | 3 | 2 ~ 0 |
| Definition | En | Length: | En | Length: | En | Length: | En | Length: |

En: indicates whether PDO is used

Length: indicates mapping of several variables

In a simple example, if we wish to control a CP2000 slave device and cause it to operate in speed mode, we only have to make the following settings:

**D2034+100*n =000Ah**

| Length | TX PDO | | | | | | | |
|---|---|---|---|---|---|---|---|---|
| | **PDO4** | | **PDO3** | | **PDO2** | | **PDO1** | |
| | Description | Special D | Description | Special D | Description | Special D | Description | Special D |
| 1 | Controller word | D2008+100*n | Controller word | D2008+100*n | Slave device DO | D2027+100*n | Controller word | D2008+100*n |
| 2 | Target torque | D2017+100*n | Target position | D2020+100*n<br>D2021+100*n | Slave device AO1 | D2031+100*n | Target speed | D2012+100*n |
| 3 | Control mode | D2010+100*n | Control mode | D2010+100*n | Slave device AO2 | D2032+100*n | | |
| 4 | | | | | Slave device AO3 | D2033+100*n | | |

| | PDO4 | | PDO3 | | PDO2 | | PDO1 | |
|---|---|---|---|---|---|---|---|---|
| Definition | Torque | | Position | | Remote I/O | | Speed | |
| bit | 15 | 14 ~ 12 | 11 | 10 ~ 8 | 7 | 6 ~ 4 | 3 | 2 ~ 0 |
| Definition | 0 | 0 | 0 | 0 | 0 | 0 | 1 | 2 |

**D2067+100*n =000Ah**

| Length | TX PDO | | | | | | | |
|---|---|---|---|---|---|---|---|---|
| | **PDO4** | | **PDO3** | | **PDO2** | | **PDO1** | |
| | Description | Special D | Description | Special D | Description | Special D | Description | Special D |
| 1 | Controller word | D2009+100*n | Controller word | D2009+100*n | Slave device DI | D2026+100*n | Controller word | D2009+100*n |
| 2 | Actual torque | D2018+100*n | Actual position | D2022+100*n<br>D2023+100*n | Slave device AI1 | D2028+100*n | Actual frequency | D2013+100*n |
| 3 | Actual mode | D2011+100*n | Actual mode | D2011+100*n | Slave device AI2 | D2029+100*n | | |
| 4 | | | | | Slave device AI3 | D2030+100*n | | |

| | PDO4 | | PDO3 | | PDO2 | | PDO1 | |
|---|---|---|---|---|---|---|---|---|
| Definition | Torque | | Position | | Remote I/O | | Speed | |
| bit | 15 | 14 ~ 12 | 11 | 10 ~ 8 | 7 | 6 ~ 4 | 3 | 2 ~ 0 |
| Definition | 0 | 0 | 0 | 0 | 0 | 0 | 1 | 2 |

Switch the PLC to Run after completing settings. Now wait for successful initialization of CANopen (M1059 = 1 and M1061 = 0), and then initiate CANopen memory mapping (M1034 = 1). The control word and frequency command will now automatically refresh to the corresponding slave device (D2008+n*100 and D2012+n*100), and the slave device's status word and currently frequency will also be automatically sent back to the master station (D2009+n*100 and D2013+n*100). This also illustrates how the master can handle these tasks through read/write operations in the special D area.

Furthermore, it should be noted that the remote I/O of PDO2 can obtain the slave device's current DI and AI status, and can also control the slave device's DO and AO status. Nevertheless, after introducing a fully automatic mapping special D, the CP2000 CANopen master also provides additional information refreshes. For instance, while in speed mode, acceleration/deceleration settings may have been refreshed. The special D therefore also stores some seldom-used real-time information, and these commands can be refreshed using the CANFLS command. The following is the CP2000's current CANopen master data conversion area, which has a range of D2001+100*n - D2033+100*n, as shown below:

1. The range of n is 0-7
2. ●Indicates PDOTX, ▲Indicates PDORX; unmarked special D can be refreshed using the CANFLS command

| Special D | Description of Function | Default | PDO Default | | | | R/W |
|---|---|---|---|---|---|---|---|
| | | | 1 | 2 | 3 | 4 | |
| D2000+100*n | Station number n of slave station<br>Setting range: 0~127<br>0: No CANopen function | 0 | | | | | RW |
| D2002+100*n | Manufacturer code of slave station number n (L) | 0 | | | | | R |
| D2003+100*n | Manufacturer code of slave station number n (H) | 0 | | | | | R |
| D2004+100*n | Manufacturer's product code of slave station number n (L) | 0 | | | | | R |
| D2005+100*n | Manufacturer's product code of slave station number n (H) | 0 | | | | | R |

Basic definitions

| Special D | Description of Function | Default | PDO Default | | | | R/W |
|---|---|---|---|---|---|---|---|
| | | | 1 | 2 | 3 | 4 | |
| D2006+100*n | Communications break handling method of slave station number n | 0 | | | | | RW |
| D2007+100*n | Error code of slave station number n error | 0 | | | | | R |
| D2008+100*n | Control word of slave station number n | 0 | ● | | ● | ● | RW |
| D2009+100*n | Status word of slave station number n | 0 | ▲ | | ▲ | ▲ | R |
| D2010+100*n | Control mode of slave station number n | 2 | | | | | RW |
| D2011+100*n | Actual mode of slave station number n | 2 | | | | | R |

Velocity Control

| Special D | Description of Function | Default | PDO Default | | | | R/W |
|---|---|---|---|---|---|---|---|
| | | | 1 | 2 | 3 | 4 | |
| D2001+100*n | Torque restriction on slave station number n | 0 | | | | | RW |
| D2012+100*n | Target speed of slave station number n (rpm) | 0 | ● | | | | RW |
| D2013+100*n | Actual speed of slave station number n (rpm) | 0 | ▲ | | | | R |
| D2014+100*n | Error speed of slave station number n (rpm) | 0 | | | | | R |
| D2015+100*n | Acceleration time of slave station number n (ms) | 1000 | | | | | RW |
| D2016+100*n | Deceleration time of slave station number n (ms) | 1000 | | | | | RW |

Torque control

| Special D | Description of Function | Default | PDO Default | | | | R/W |
|---|---|---|---|---|---|---|---|
| | | | 1 | 2 | 3 | 4 | |
| D2017+100*n | Target torque of slave station number n(-100.0%~+100.0%) | 0 | | | | ● | RW |
| D2018+100*n | Actual torque of slave station number n(XX.X%) | 0 | | | | ▲ | R |
| D2019+100*n | Actual current of slave station number n(XX.XA) | 0 | | | | | R |

Position control

| Special D | Description of Function | Default | PDO Default | | | | R/W |
|---|---|---|---|---|---|---|---|
| | | | 1 | 2 | 3 | 4 | |
| D2020+100*n | Target of slave station number n (L) | 0 | | | ● | | RW |
| D2021+100*n | Target of slave station number n (H) | 0 | | | | | RW |
| D2022+100*n | Actual position of slave station number n (L) | 0 | | | ▲ | | R |
| D2023+100*n | Actual position of slave station number n (H) | 0 | | | | | R |
| D2024+100*n | Speed chart of slave station number n (L) | 10000 | | | | | RW |
| D2025+100*n | Speed chart of slave station number n (H) | 0 | | | | | RW |

Remote I/O

| Special D | Description of Function | Default | PDO Default | | | | R/W |
|---|---|---|---|---|---|---|---|
| | | | 1 | 2 | 3 | 4 | |
| D2026+100*n | MI status of slave station number n | 0 | | ▲ | | | R |
| D2027+100*n | MO setting of slave station number n | 0 | | ● | | | RW |
| D2028+100*n | AI1 status of slave station number n | 0 | | ▲ | | | R |
| D2029+100*n | AI2 status of slave station number n | 0 | | ▲ | | | R |
| D2030+100*n | AI3 status of slave station number n | 0 | | ▲ | | | R |
| D2031+100*n | AO1 setting of slave station number n | 0 | | ● | | | RW |
| D2032+100*n | AO2 setting of slave station number n | 0 | | ● | | | RW |
| D2033+100*n | AO3 setting of slave station number n | 0 | | ● | | | RW |

After gaining an understanding of special D definitions, we return to setting steps. After entering the values corresponding to D1090 to D1099, D2000+100*n, D2034+100*n and D2067+100*n, we cannot begin to perform downloading, which is performed in accordance with the following steps: (1. D2000 and D2100 are set as 20 and 21, and D2200, D2300, D2400, D2500, D2600, and D2700 are set as 0; if a setting of 0 causes problems, D1091 can be set as 3, and slave stations 2 to 7 can be closed. 2. Switch PLC to Stop status. 3. Press the transmit button. 4. click on write memory after exiting the window. 5. Ignore D0-D399. 6. Change the second range to D1090-D1099. 7. Click on Confirm.)

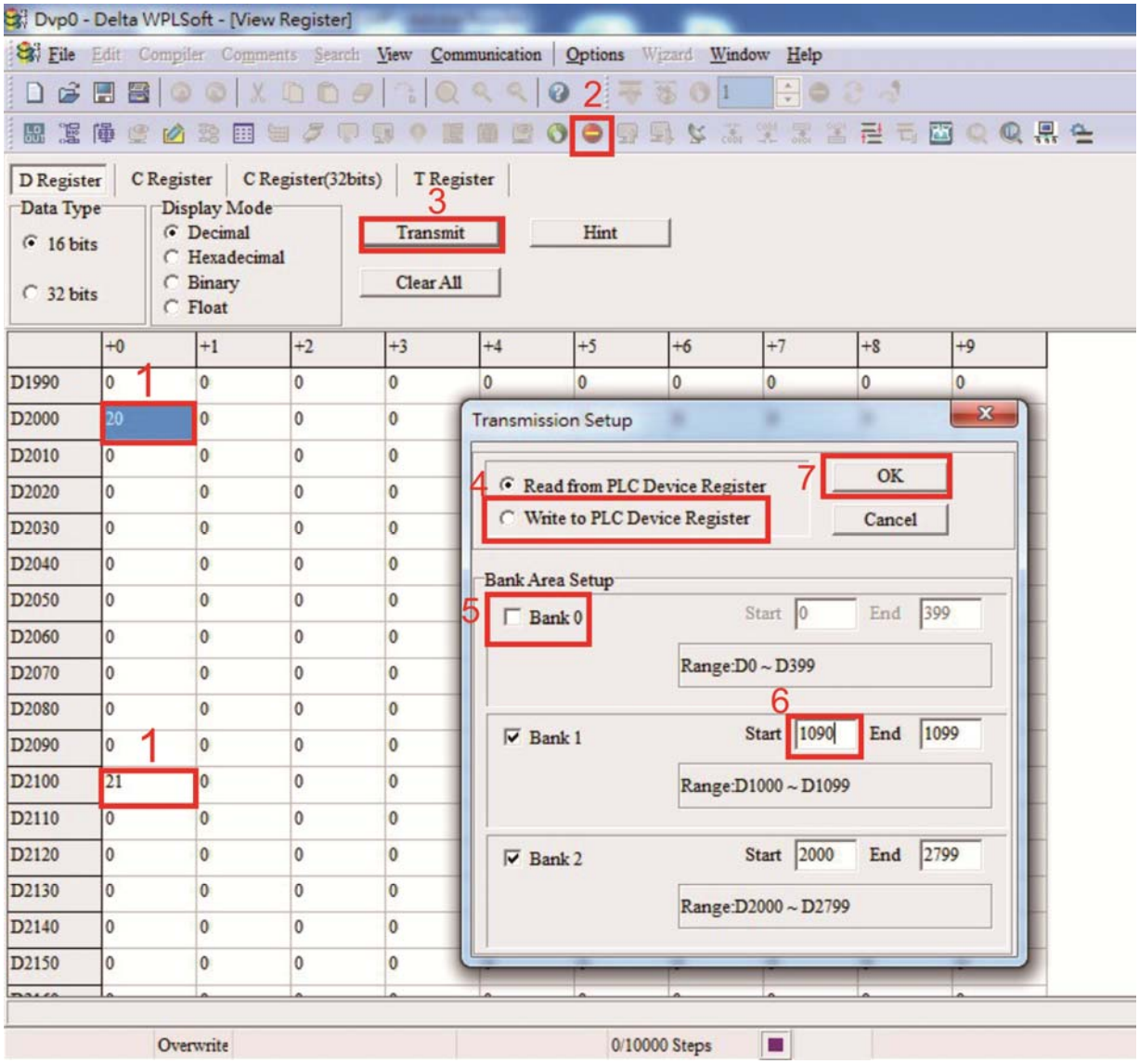


- Another method can be used to set D1091: Determine which of slave stations 0 to 7 will not be needed, and set the corresponding bits to 0. For instance, if it is not necessary to control slave stations 2, 6 and 7, merely set D1091 = 003B, and the setting method is the same as described above: Use WPL to initiate **communications > use register edit (T C D)** function to perform settings.

## Step 3: Set the master's communications station number and communications speed

- ☑ When setting the master's station number (parameter 09-46, default is set as 100), make sure not to use the same number as a slave station.
- ☑ Set the CANopen communications speed (parameter 09-37); regardless of whether the driver is defined as a master or slave station, the communications speed is set via this parameter.

## Step 4: Write program code

Real-time access: Can directly read/write to or from the corresponding D area.

Non real-time access:

**Read command**: Use the CANRX command for reading. M1066 will be 1 when reading is complete; M1067 will be 1 if reading is successful, and M1067 will be 0 if an error has occurred.

**Write command**: Use the CANTX command for writing. M1066 will be 1 when writing is complete; M1067 will be 1 if writing is successful, and M1067 will be 0 if an error has occurred.

**Refresh command:** Use CANFLS command to refresh (if there are RW attributes, the master will write to the slave station; if there are RO attributes, the slave station will return the read values to the master); M1066 will be 1 if refresh has been completed; M1067 will be 1 if refresh is successful, and M1067 will be 0 if an error has occurred.

NOTE

When using CANRX, CANTX or CANFLS, internal implementation commands will wait until M1066 is completed before executing the next CANRX, CANTX or CANFLS.

Afterwards, download program to the driver (Please note that the PLC's default communications format is ASCII 7N2 9600, and the station number is 2. The WPL must therefore be modified, and the WPL setting pathway is **settings > communications settings**)

## Step 5: Set the slave stations' station numbers, communications speed, control source, and command source

Delta's CP2000 and EC series devices currently support the CANopen communications interface driver, and the corresponding slave station numbers and communications speed parameters are as follows:

| | Corresponding device parameters | | Value | Definition |
|---|---|---|---|---|
| | CP2000 | E-C | | |
| Slave station address | 09-36 | 09-20 | 0 | Disable CANopen hardware interface |
| | | | 1~127 | CANopen Communication address |
| Communication speed | 09-37 | 09-21 | 0 | 1M |
| | | | 1 | 500K |
| | | | 2 | 250K |
| | | | 3 | 125K |
| | | | 4 | 100K |
| | | | 5 | 50K |
| Control source | 00-21 | - | 3 | |
| | - | 02-01 | 5 | |
| Frequency source | 00-20 | - | 6 | |
| | - | 02-00 | 5 | |
| Torque source | 11-33 | - | 3 | |
| | - | - | - | |
| Position source | 11-40 | - | 3 | |
| | - | - | - | |

Delta's A2 Servo currently supports the CANopen communications interface, and the corresponding slave station numbers and communications speed parameters are as follows:

| | Corresponding device parameters | Value | Definition |
|---|---|---|---|
| | A2 | | |
| Slave station address | 03-00 | 1~127 | CANopen Communication address |
| Communication speed | 03-01 bit 8-11 XRXX | R= 0 | 125K |
| | | R= 1 | 250K |
| | | R= 2 | 500K |
| | | R= 3 | 750K |
| | | R= 4 | 1M |
| Control/command source | 01-01 | B | |

## Step 6: Connect hardware wiring

When performing wiring, note the head and tail terminal resistance; connection methods are as follows:

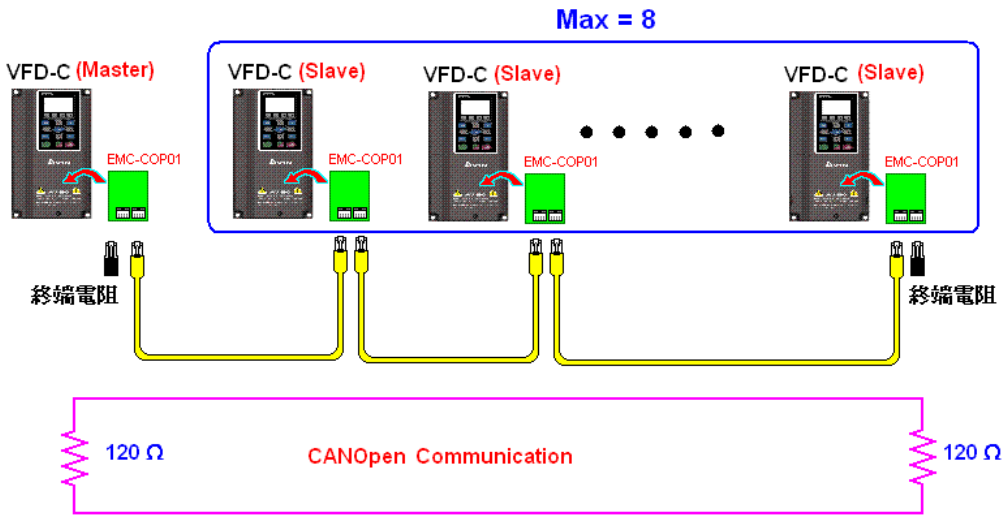


## Step 7: Initiate control

After a program has been written and downloaded, switch the PLC mode to Run. Merely turn power to master and slave stations off and then on again.

Refer to CANMasterTest 1 vs. 2 driver.dvp

Example :

CP2000 driver one-to-two control

Step 1: Activating CANopen Master functions

- ☑ Parameter 09-45=1 (initiates Master functions); restart power after completing setting, the status bar on the KPC-CC01 digital keypad will display "CAN Master".
- ☑ Parameter 00-02=6 reset PLC (please note that this action will reset the program and PLC registers to the default values)
- ☑ Turn power off and on again.
- ☑ **Use the KPC-CC01 digital keypad to set the PLC control mode as "PLC Stop"** (if the KPC-CE01 digital keypad is used, set as "PLC 2"; if a newly-introduced driver is used, the blank internal PLC program will cause a PLFF warning code to be issued).

Step 2: Master memory correspondences

- ☑ Enable WPL
- ☑ Use keypad set PLC mode as Stop (PLC 2)
- ☑ WPL read D1070 to D1099 D2000 to D2799
- ☑ Set D2000=10 D2100=11
- ☑ Set D2100 2200 2300 2400 2500 2600 2700=0
- ☑ Download D2000 to D2799 settings

Step 3: Set the master's communications station number and communications speed

- ☑ When setting the master's station number (parameter 09-46, default is set as 100), make sure not to use the same number as a slave station.
- ☑ Set the CANopen communications speed as 1M (parameter 09-37=0); regardless of whether the driver is defined as a master or slave station, the communications speed is set via this parameter.

Step 4: Write program code

Real-time access: Can directly read/write to or from the corresponding D area.

Non real-time access:

**Read command**: Use the CANRX command for reading. M1066 will be 1 when reading is complete; M1067 will be 1 if reading is successful, and M1067 will be 0 if an error has occurred.

**Write command**: Use the CANTX command for writing. M1066 will be 1 when writing is complete; M1067 will be 1 if writing is successful, and M1067 will be 0 if an error has occurred.

**Refresh command:** Use CANFLS command to refresh (if there are RW attributes, the master will write to the slave station; if there are RO attributes, the slave station will return the read values to the master); M1066 will be 1 if refresh has been completed; M1067 will be 1 if refresh is successful, and M1067 will be 0 if an error has occurred.

**NOTE**

When using CANRX, CANTX or CANFLS, internal implementation commands will wait until M1066 is completed before executing the next CANRX, CANTX or CANFLS.

Afterwards, download program to the driver (Please note that the PLC's default communications format is ASCII 7N2 9600, and the station number is 2. The WPL must therefore be modified, and the WPL setting pathway is **settings > communications settings**)

Step 5: Set the slave stations' station numbers and communications speed

Slave station no. 1: 09-37 = 0(Speed 1M)  09-36=10(Node ID 10 )

Slave station no. 2: 09-37 = 0(Speed 1M)  09-36=10(Node ID 11 )

Step 6: Connect hardware wiring

When performing wiring, note the head and tail terminal resistance; connection methods are as follows:

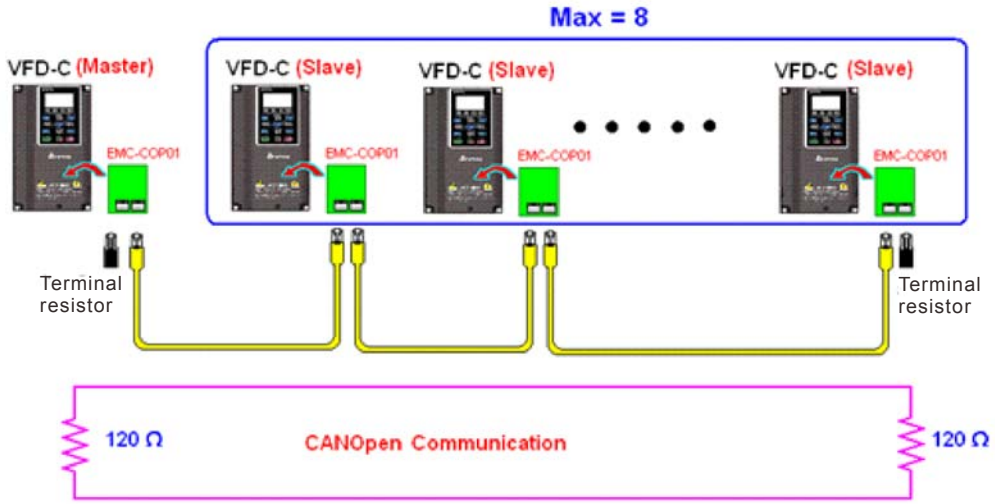


Step 7: Initiate control

After a program has been written and downloaded, switch the PLC mode to Run. Merely turn power to master and slave stations off and then on again.

Refer to CANMasterTest 1 vs. 2 driver.dvp

# 16-9 Explanation of various PLC speed mode controls

Speed mode supports SVC control. Under the speed mode of SVC control, control therefore cannot be performed successfully unless finish motor parameter auto tuning ahead of time.

Control methods and settings are explained as follows:

Speed control:

Register table for speed mode:

Control special M

| Special M | Description of Function | Attributes |
|---|---|---|
| M1025 | Driver frequency = set frequency (ON)/driver frequency =0 (OFF) | RW |
| M1026 | Driver operating direction FWD(OFF)/REV(ON) | RW |
| M1040 | Hardware power (Servo On) | RW |
| M1042 | Quick stop | RW |
| M1044 | Pause (Halt) | RW |
| M1052 | Lock frequency (lock, frequency locked at the current operating frequency) | RW |

Status special M

| Special M | Description of Function | Attributes |
|---|---|---|
| M1015 | Frequency attained (when used together with M1025) | RO |
| M1056 | Servo On Ready | RO |
| M1058 | On Quick Stopping | RO |

Control special D

| Special D | Description of Function | Attributes |
|---|---|---|
| D1060 | Mode setting (speed mode is 0) | RW |

Status special D

| Special D | Description of Function | Attributes |
|---|---|---|
| D1037 | Converter output frequency (0.00~600.00) | RO |
| D1050 | Actual operating mode (speed mode is 0) | RO |

Speed mode control commands:

| **FREQ(P)** | S1 | S2 | S3 |
|---|---|---|---|
| | Target speed | The first acceleration time setting | The first deceleration time setting |

Example of speed mode control:

Before performing speed control, if the SVC control method is used, setting of electromechanical parameters must first be completed.

1. Setting D1060 = 0 will shift the converter to the speed mode (default).
2. Use the FREQ command to control frequency, acceleration time, and deceleration time.
3. Set M1040 = 1, the driver will now be excited, but the frequency will be 0.

4. Set M1025 = 1, the driver frequency command will now jump to the frequency designated by FREQ, and acceleration/deceleration will be controlled on the basis of the acceleration time and deceleration time specified by FREQ.
5. M1052 can be used to lock the current operating frequency.
6. M1044 can be used to temporarily pause operation, and the deceleration method will comply with deceleration settings.
7. M1042 can be used to perform quick stop, and deceleration will be as quick as possible without giving rise to an error. (There may still be a jump error if the load is too large.)
8. Control user rights: M1040(Servo ON) > M1042(Quick Stop) >M1044(Halt) >M1052(LOCK)

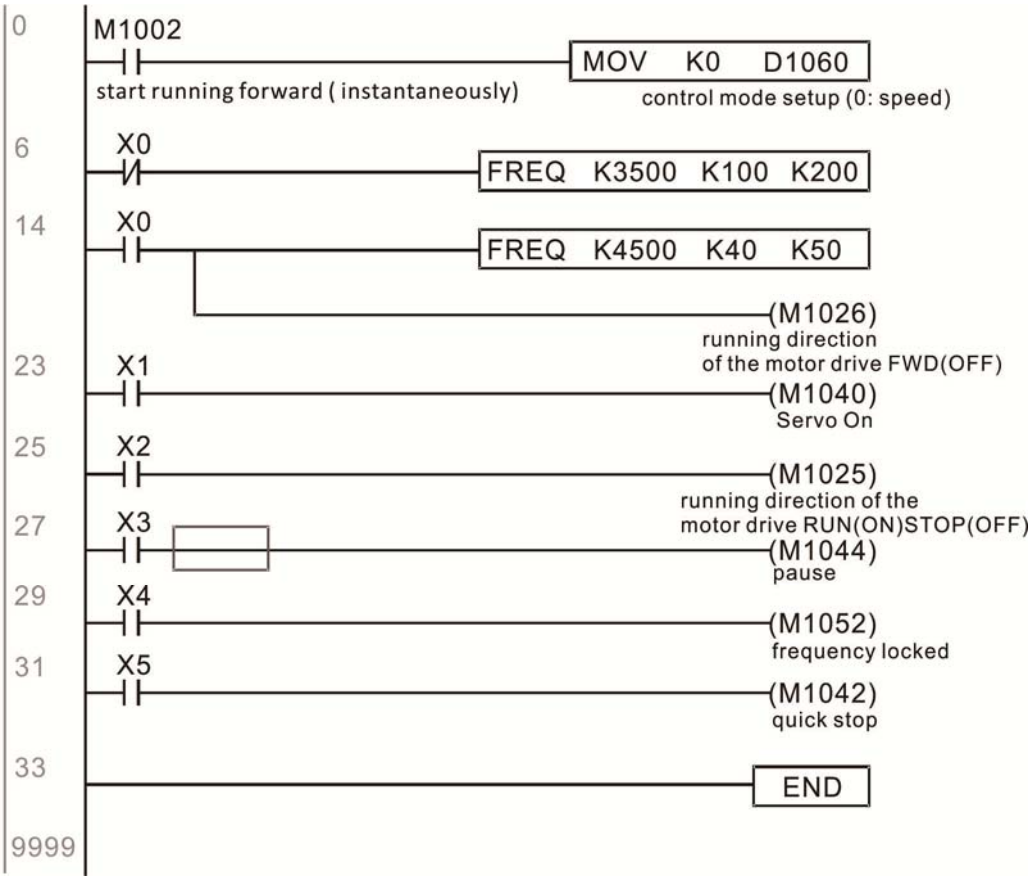

# 16-10 Internal communications main node control

The protocol has been developed in order to facilitate the use of 485 instead of CANopen in certain application situations. The 485 protocol offers similar real-time characteristics as CANopen; this protocol can only be used on the CP2000 and CT2000 devices. The maximum number of slave devices is 8.

Internal communications have a master-slave structure. The initiation method is very simple:

Slave device:

Set parameter 09-31 = -1 to -8 in order to access 8 nodes, and set parameter 00-20 = 1 to define the control source as 485 and access the reference sources that must be controlled, namely speed command (00-21 = 2), torque command (11-33 = 1), and position command (11-40=2). This will complete slave device settings. (PLC functions do not need to be activated)

System

Setting the master is even simpler; it is only necessary to set parameter 09-31 = -10, and enable the PLC.

Hardware wiring:

The master and slave stations are connected via the 485 serial port. The CP2000 provide two types of 485 serial port interfaces, see the figure below: (please refer to 06 Control terminals concerning detailed terminal connections)

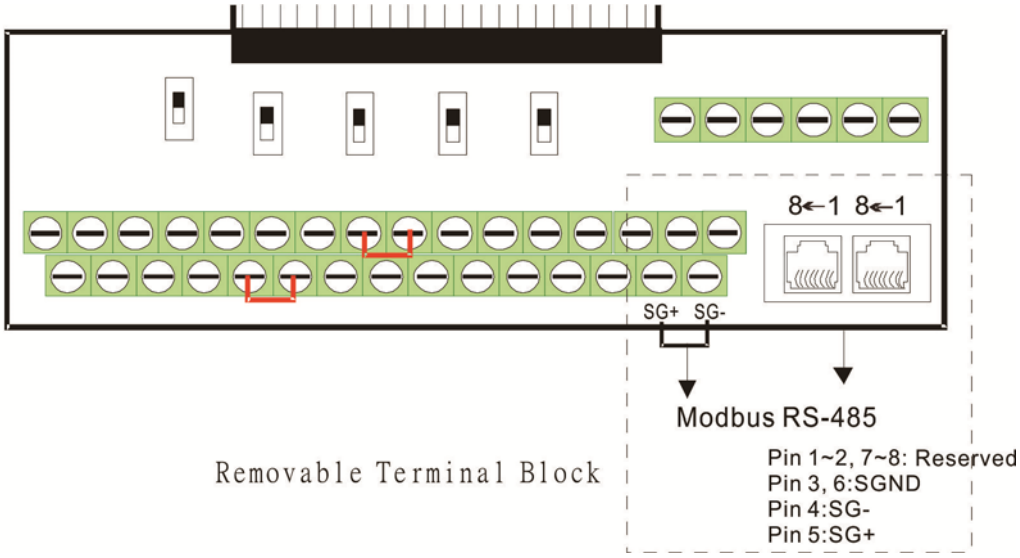

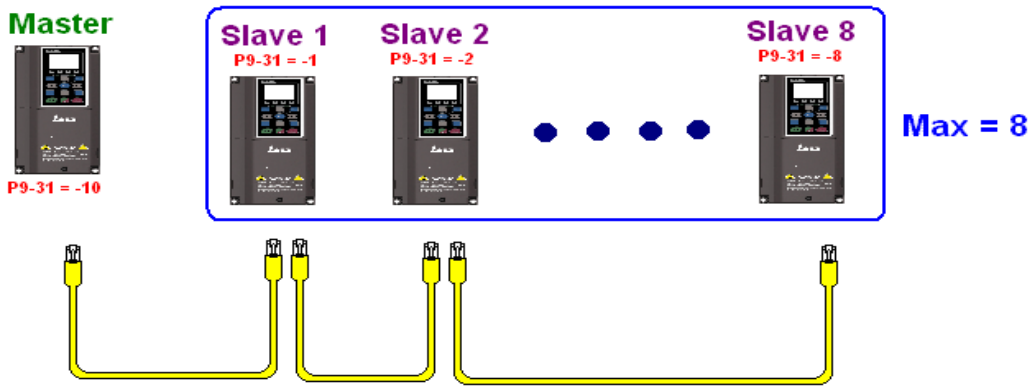
Master
P9-31 = -10
Slave 1
P9-31 = -1
Slave 2
P9-31 = -2
Slave 8
P9-31 = -8
Max = 8

Master programming: In a program, D1110 can be used to define a slave station to be controlled (1-8, if set as 0, can jump between 8 stations). Afterwards, M1035 is set as 1, and the memory positions of the master and slave stations will correspond. At this time, it is only necessary to send commands to the correlation slave station address to control that station. The following is a register table connected with internal communications:

Control special M

| Special M | Description of Function | Attributes |
|---|---|---|
| M1035 | Initiates internal communications control | RW |

Control special D

| Special D | Description of Function | Attributes |
|---|---|---|
| D1110 | Internal node communications number 1-8 (set the station number of the slave station to be controlled) | RW |

| Special D | Description of Function | | | | | | | Attributes |
|---|---|---|---|---|---|---|---|---|
| | Definition | bit | User rights | Speed mode | Location mode | Torque mode | Homing mode | |
| D1120 + 10*N | Internal node N control command | 0 | 4 | Command functions | - | - | Homing Origin | RW |
| | | 1 | 4 | Reverse rotation requirements | Immediate change | - | - | |
| | | 2 | 4 | - | - | - | - | |
| | | 3 | 3 | Temporary pause | Temporary pause | - | - | |
| | | 4 | 4 | Frequency locking | - | - | Temporary pause | |
| | | 5 | 4 | JOG | - | - | - | |
| | | 6 | 2 | Quick Stop | Quick Stop | Quick Stop | Quick Stop | |
| | | 7 | 1 | Servo ON | Servo ON | Servo ON | Servo ON | |
| | | 11~8 | 4 | Speed interval switching | Speed interval switching | - | - | |
| | | 13~12 | 4 | Deceleration time change | - | - | - | |
| | | 14 | 4 | Enable Bit 13 ~ 8 | Enable Bit 13 ~ 8 | - | - | |
| | | 15 | 4 | Clear error code | Clear error code | Clear error code | Clear error code | |
| D1121 + 10*N | Internal node N control mode | | | 0 | 1 | 2 | 3 | RW |
| D1122 + 10*N | Internal node N reference command L | | | Speed command (no number) | Position command (with numbers) | Torque command (with numbers) | - | RW |
| D1123 + 10*N | Internal node N reference command H | | | - | | Speed limit | - | RW |

※ N = 0 ~ 7

Status special D

| Special D | Description of Function | Attributes |
|---|---|---|
| D1115 | Internal node synchronizing cycle (ms) | RO |
| D1116 | Internal node error (bit0 = slave device 1, bit1 = slave device 2,…bit7 = slave device 8) | RO |
| D1117 | Internal node online correspondence (bit0 = slave device 1, bit1 = slave device 2,…bit7 = slave device 8) | RO |

| Special D | Description of Function | | | | | Attributes |
|---|---|---|---|---|---|---|
| | bit | Speed mode | Location mode | Torque mode | Homing mode | |
| D1126 + 10*N | 0 | Frequency command arrival | Position command attained | Torque command attained | Zero command completed | RO |
| | 1 | Clockwise | Clockwise | Clockwise | Clockwise | |
| | | Counterclockwise: | Counterclockwise: | Counterclockwise: | Counterclockwise: | |
| | 2 | Warning | Warning | Warning | Warning | |
| | 3 | Error | Error | Error | Error | |
| | 5 | JOG | | | | |
| | 6 | Quick Stop | Quick Stop | Quick Stop | Quick Stop | |
| | 7 | Servo ON | Servo ON | Servo ON | Servo ON | |
| D1127 + 10*N | | Actual frequency | Actual position (with numbers) | Actual torque (with numbers) | - | RO |
| D1128 + 10*N | | - | | - | - | |

※ N = 0 ~ 7

Example: Assume it is desired to control slave station 1 operation at frequencies of 30.00Hz and 60.00 Hz, status, and online node correspondences:

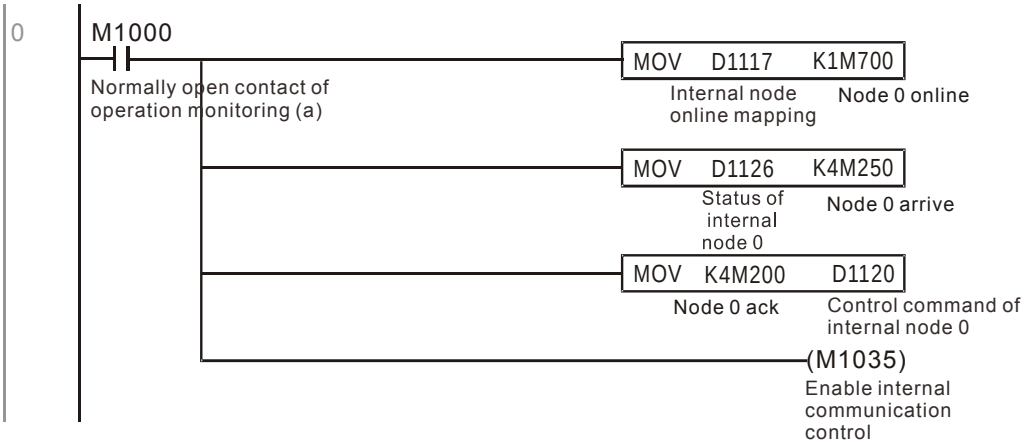


When it is judged that slave station 1 is online, delay 3 sec. and begin control

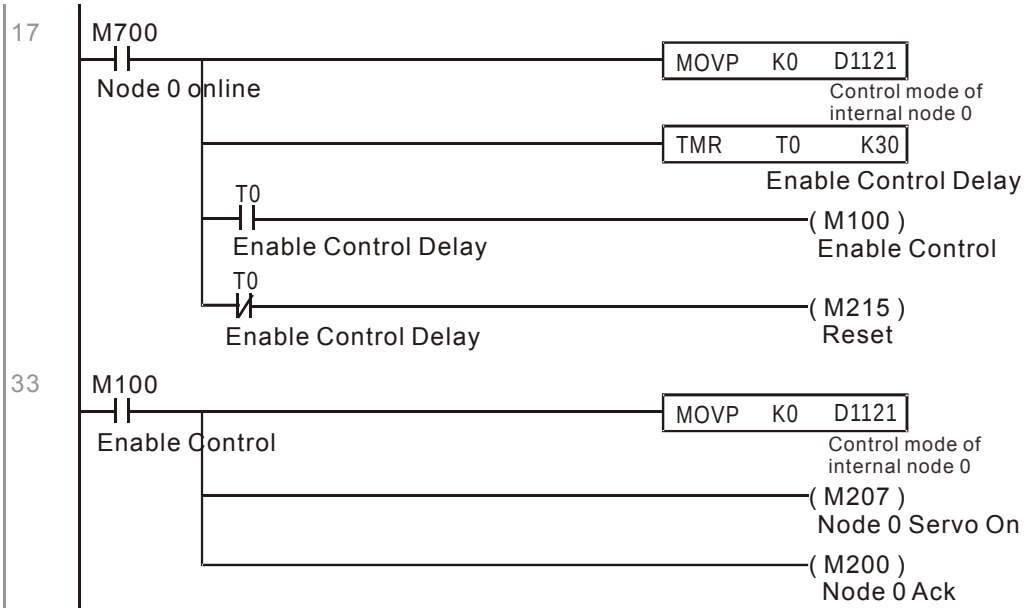

It is required slave station 1 maintain forward rotation at 30.00Hz for 1 sec., and maintain reverse rotation at 60.00 Hz for 1 sec., and repeat this cycle continuously.

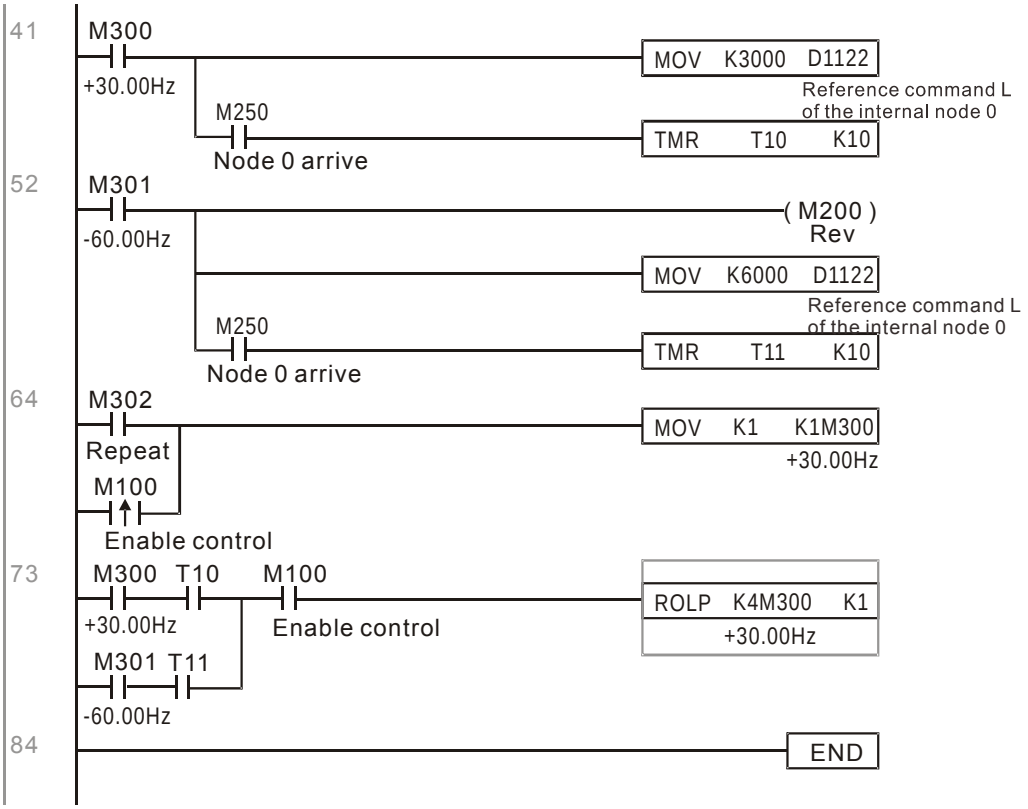

# 16-11 Modbus remote IO control applications (use MODRW)

The CP2000's internal PLC supports 485 read/write functions, which can be realized using the MODRW command. However, the 485 serial port must be defined as available for the PLC's 485 use before writing a program, and the parameter 09-31 must be set as -12. After completing settings, the standard functions defined by 485 can be used to implement read/write commands at other stations. Communications speed is defined by parameter 09-01, the communications format is defined by parameter 09-04, and the PLC's current station number is defined by parameter 09-35. The CP2000 currently supports the functions read coil (0x01), read input (0x02), read register (0x03), write to single register (0x06), write to several coils (0x0F), and write to several registers (0x10). Explanations and the usage of these functions are provided as follows:

| MODRW command | | | | | General meaning | Slave device is Delta's PLC meaning | Slave device is Delta's converter meaning |
|---|---|---|---|---|---|---|---|
| S1 | S2 | S3 | S4 | S5 | | | |
| Node ID | Command | Address | Return: D area | Length: | | | |
| K3 | H01 | H500 | D0 | K18 | Read coil (Bit) | Read 18 bits of data corresponding to slave station 3 PLC Y0 to Y21. This data is stored by bit 0 to 15 of the this station's D0 and bit 0 to bit 3 of D1. | Does not support this function |
| K3 | H02 | H400 | D10 | K10 | Read input (Bit) | Read 10 bits of data corresponding to slave station 3 PLC X0 to X11. This data is stored by bit 0 to 9 of this station's D10. | Does not support this function |
| K3 | H03 | H600 | D20 | K3 | Read register (word) | Read 3 words of data corresponding to slave station 3 PLC T0 to T2. This data is stored by D20 to D22. | Read 3 words of data corresponding to slave station 3 converter parameters 06-00 to 06-02. This data is stored by D20 to D22 |
| K3 | H06 | H610 | D30 | XX | Write to single register (word) | Write slave station 3 PLC's T16 to this station's D30 value | Write slave station 3 converter 06 to 16 parameter to this station's D30 value |
| K3 | H0F | H509 | D40 | K10 | Write to multiple coils (Bit) | Write slave station 3 PLC's Y11 to Y22 to bit 0 to 9 of D40. | Does not support this function |
| K3 | H10 | H602 | D50 | K4 | Write to multiple registers (word) | Write slave station 3 PLC's T2 to T5 to D50 to D53 | Write slave station 3 converter 06-02 to 06-05 parameters to this station's D50 to D53 |

※ XX indicates doesn't matter

After implementing MODRW, the status will be displayed in M1077 (485 read/write complete), M1078 (485 read/write error), and M1079 (485 read/write time out). M1077 is defined so as to immediately revert to 0 after the MODRW command has been implemented. However, any of three situations—a report of no error, a data error report, or time out with no report—will cause the status of M1077 to change to On.

Example program: Testing of various functions

At the start, will cause the transmitted time sequence to switch to the first data unit.

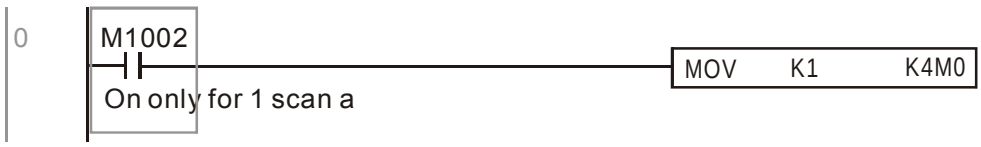

When the reported message indicates no error, it will switch to the next transmitted command

If time out occurs or an error is reported, the M1077 will change to On. At this time, after a delay of 30 scanning cycles, it will re-issue the original command once

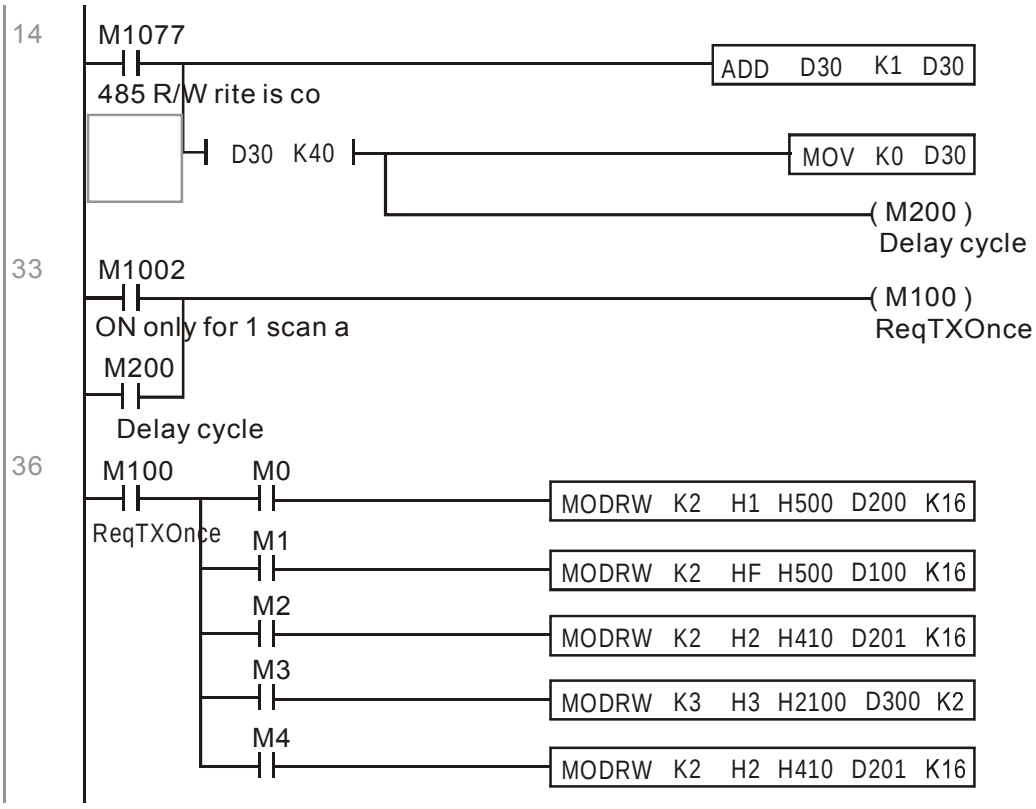


It will repeat after sending all commands

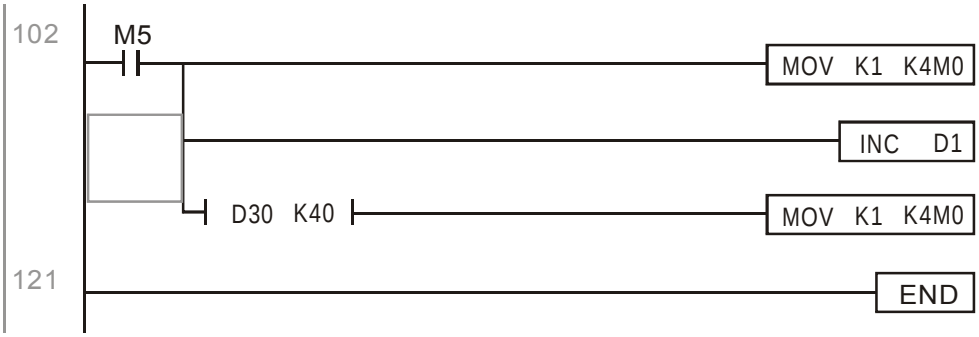


Practical applications:

Actual use to control the RTU-485 module.

Step 1: Set the communications format. Assume that the communications format is 115200, 8,N,2, RTU

CP2000：The default PLC station number is set as 2 (09-35)

09-31=-12(COM1 is controlled by the PLC ), 09-01=115.2(The communications speed is 115200 )

09-04=13(The format is 8,N,2, RTU)

RTU485: The station number = 8 (give example)

| ID7 | ID6 | ID5 | ID4 | ID3 | ID2 | ID1 | ID0 |
|---|---|---|---|---|---|---|---|
| 0 | 0 | 0 | 0 | 1 | 0 | 0 | 0 |

| PA3 | PA2 | PA1 | PA0 | DR2 | DR1 | DR0 | A/R |
|---|---|---|---|---|---|---|---|
| **1** | **0** | **0** | **0** | **1** | **1** | **1** | **0** |

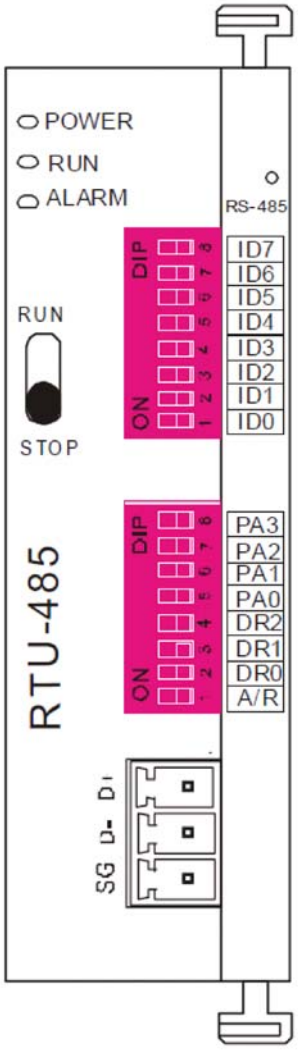


Communication station #:
ID0~ ID7 are defined as $2^0$, $2^1$, $2^2$…$2^6$, $2^7$

Communication protocol

| PA3 | PA2 | PA1 | PA0 | A/R | Communication Protocol |
|---|---|---|---|---|---|
| OFF | OFF | OFF | OFF | ON | 7,E,1 · ASCII |
| OFF | OFF | OFF | ON | ON | 7,O,1 · ASCII |
| OFF | OFF | ON | OFF | ON | 7,E,2 · ASCII |
| OFF | OFF | ON | ON | ON | 7,O,2 · ASCII |
| OFF | ON | OFF | OFF | ON | 7,N,2 · ASCII |
| OFF | ON | OFF | ON | ON | 8,E,1 · ASCII |
| OFF | ON | ON | OFF | ON | 8,O,1 · ASCII |
| OFF | ON | ON | ON | ON | 8,N,1 · ASCII |
| ON | OFF | OFF | OFF | ON | 8,N,2 · ASCII |
| OFF | ON | OFF | ON | OFF | 8,E,1 · RTU |
| OFF | ON | ON | OFF | OFF | 8,O,1 · RTU |
| OFF | ON | ON | ON | OFF | 8,N,1 · RTU |
| ON | OFF | OFF | OFF | OFF | 8,N,2 · RTU |

| DR2 | DR1 | DR0 | Communicaton Speed |
|---|---|---|---|
| OFF | OFF | OFF | 1,200 bps |
| OFF | OFF | ON | 2,400 bps |
| OFF | ON | OFF | 4,800 bps |
| OFF | ON | ON | 9,600 bps |
| ON | OFF | OFF | 19,200 bps |
| ON | OFF | ON | 38,400 bps |
| ON | ON | OFF | 57,600 bps |
| ON | ON | ON | 115,200 bps |

Step 2: Install control equipment. We sequentially connect a DVP16-SP (8 IN 8 OUT), DVP-04AD (4 channels AD), DVP02DA (2 channels DA), and DVP-08ST (8 switches) to the RTU485.

The following corresponding locations can be obtained from the RTU485's configuration definitions:

| Module | Terminals | 485 Address |
|---|---|---|
| DVP16-SP | X0 ~ X7 | 0400H ~ 0407H |
| | Y0 ~ Y7 | 0500H ~ 0507H |
| DVP-04AD | AD0 ~ AD3 | 1600H ~ 1603H |
| DVP02DA | DA0 ~ DA1 | 1640H ~ 1641H |
| DVP-08ST | Switch 0 ~ 7 | 0408H ~ 040FH |

Step 3: Physical configuration

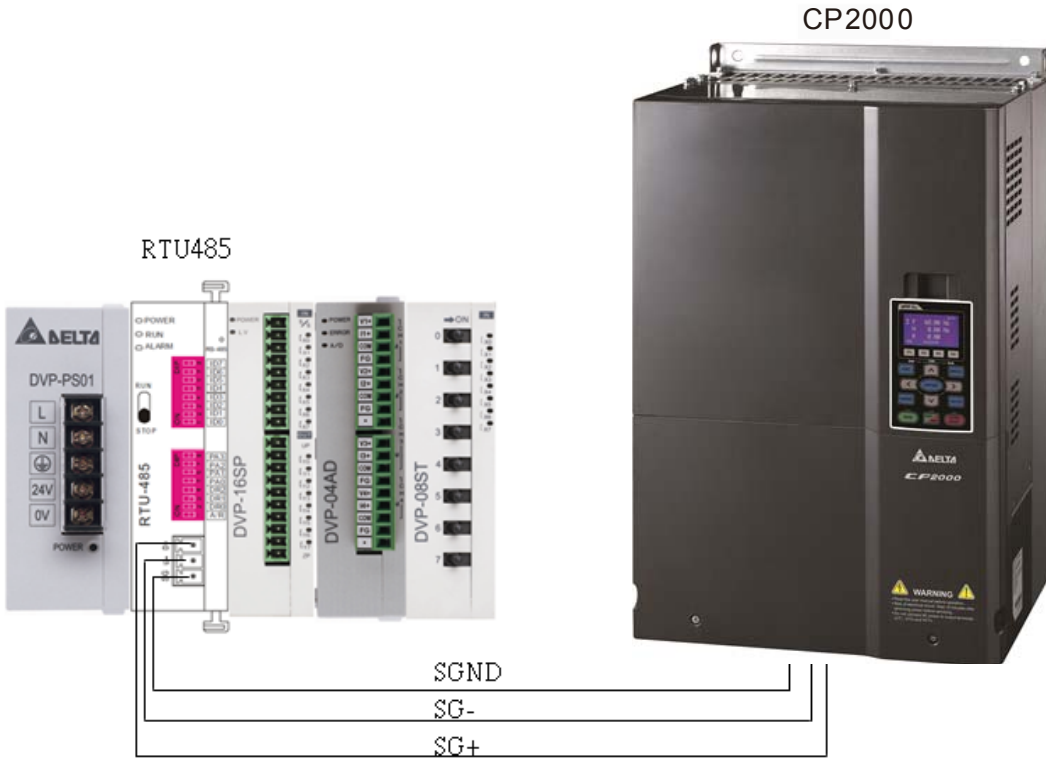


Step 4: Write to PLC program

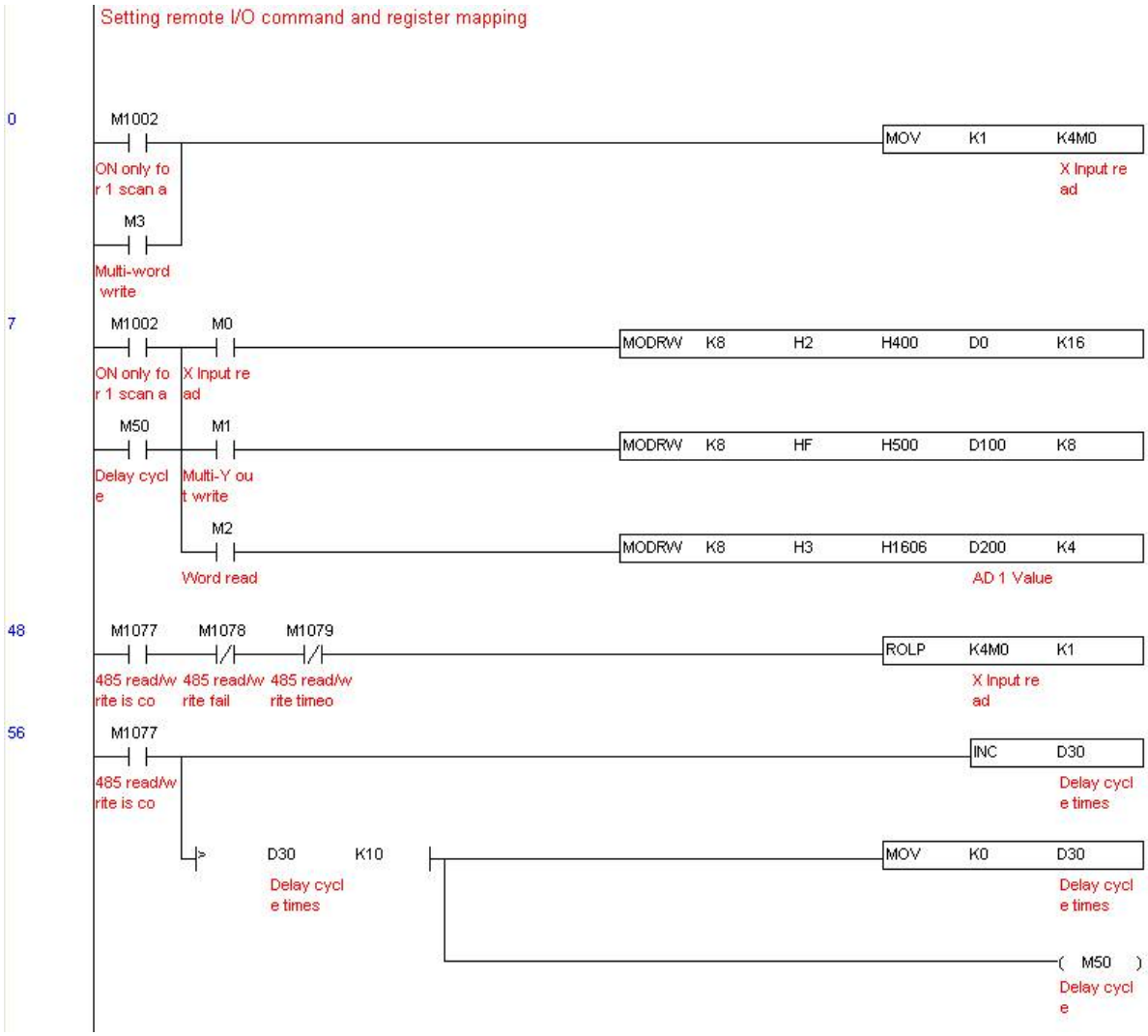

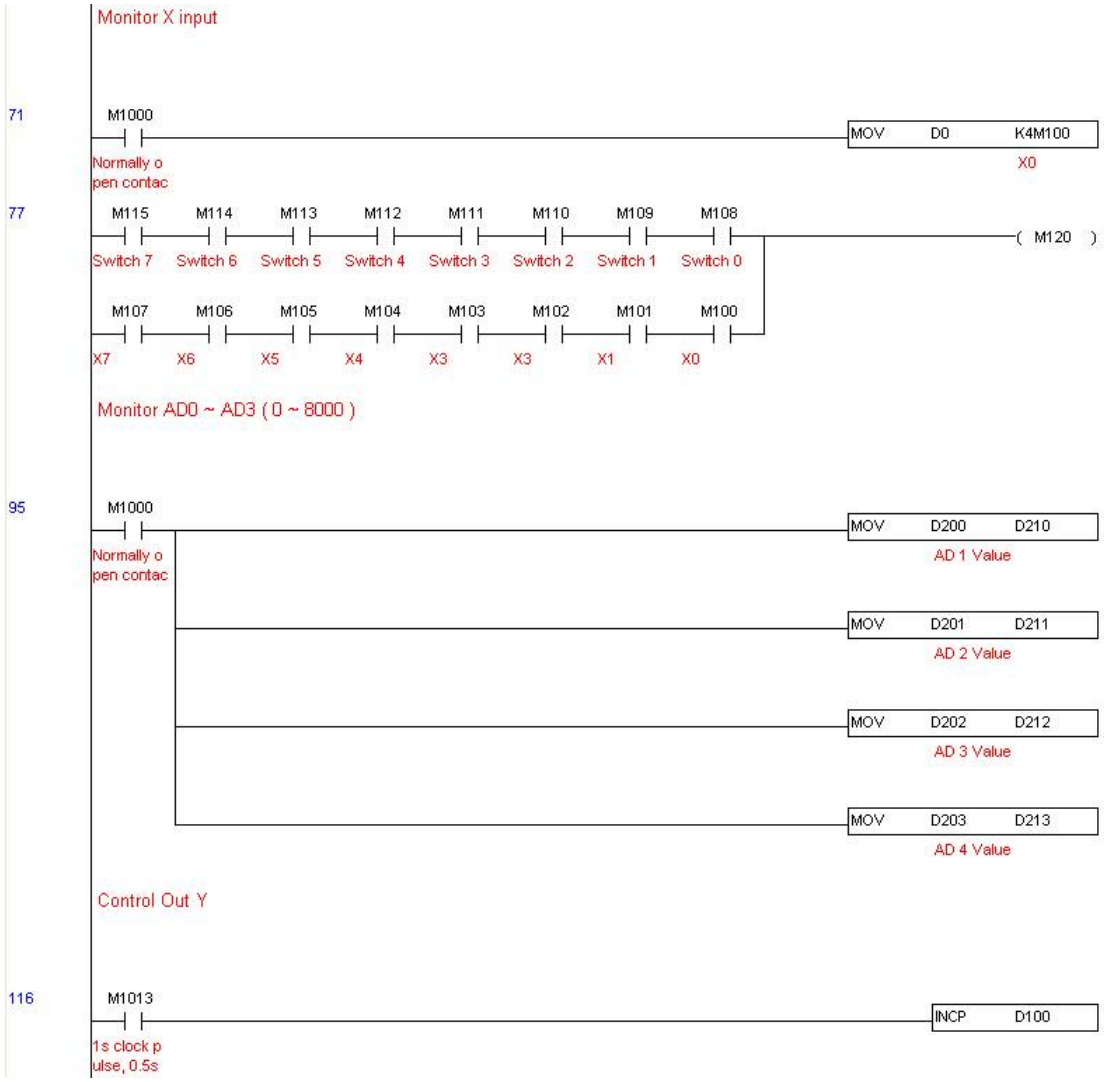
Monitor X input
71
M1000
Normally o
pen contac
MOV D0 K4M100
X0
77
M115 M114 M113 M112 M111 M110 M109 M108
Switch 7 Switch 6 Switch 5 Switch 4 Switch 3 Switch 2 Switch 1 Switch 0
( M120 )
M107 M106 M105 M104 M103 M102 M101 M100
X7 X6 X5 X4 X3 X3 X1 X0
Monitor AD0 ~ AD3 ( 0 ~ 8000 )
95
M1000
Normally o
pen contac
MOV D200 D210
AD 1 Value
MOV D201 D211
AD 2 Value
MOV D202 D212
AD 3 Value
MOV D203 D213
AD 4 Value
Control Out Y
116
M1013
1s clock p
ulse, 0.5s
INCP D100

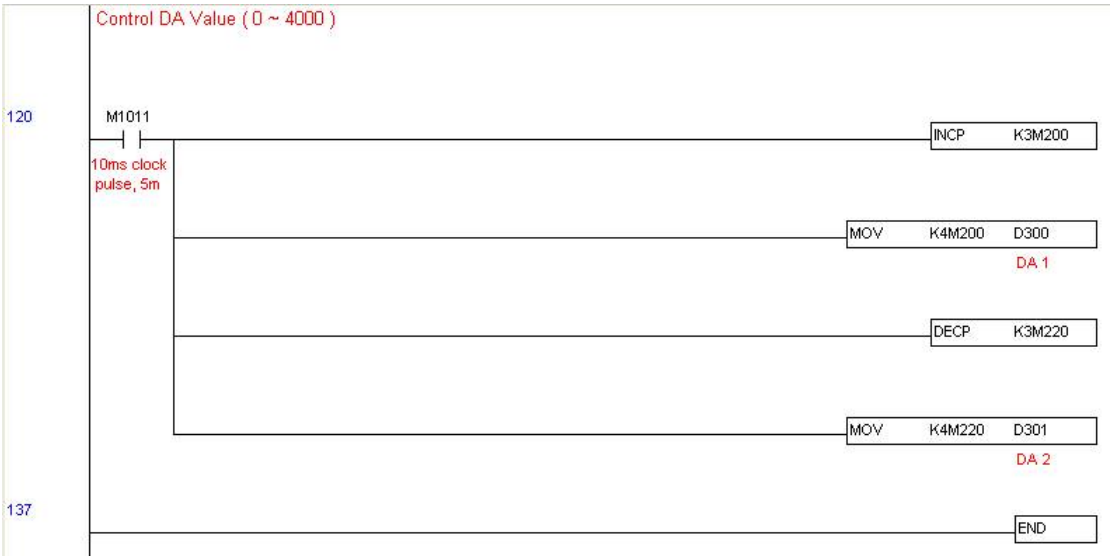
Control DA Value ( 0 ~ 4000 )
120
M1011
10ms clock
pulse, 5m
INCP K3M200
MOV K4M200 D300
DA 1
DECP K3M220
MOV K4M220 D301
DA 2
137
END

Step 5: Actual testing situation:

I/O testing: When the switch is activated, it can be discovered that the display corresponds to M115 - M108. Furthermore, it can be seen that one output point light is added every 1 sec. (the display uses a binary format)

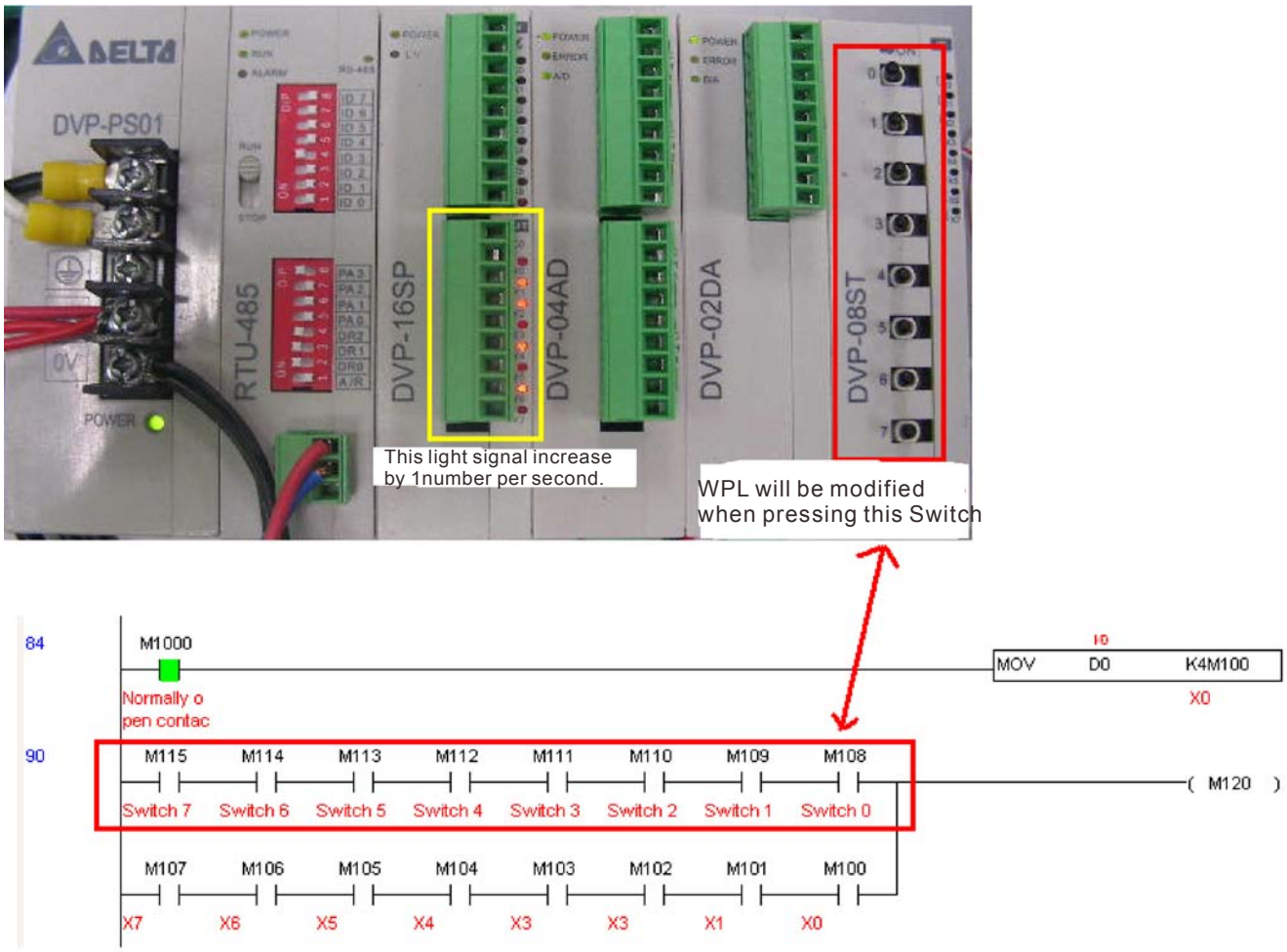


AD DA testing: It can be discovered that D200 and D201 are roughly twice the D300, and continue to increase progressively. For their part, the D202 and D203 are roughly twice the D301, and continue to decrease progressively.

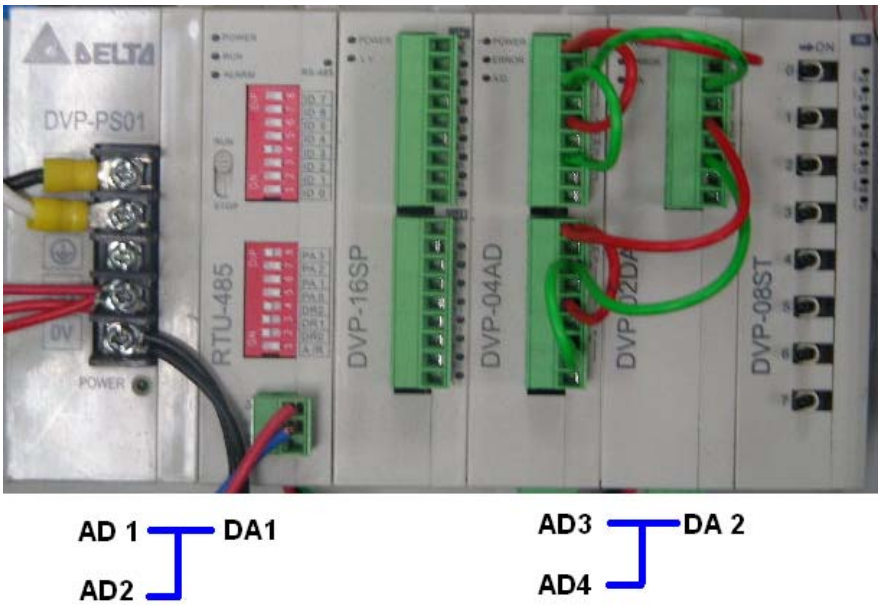

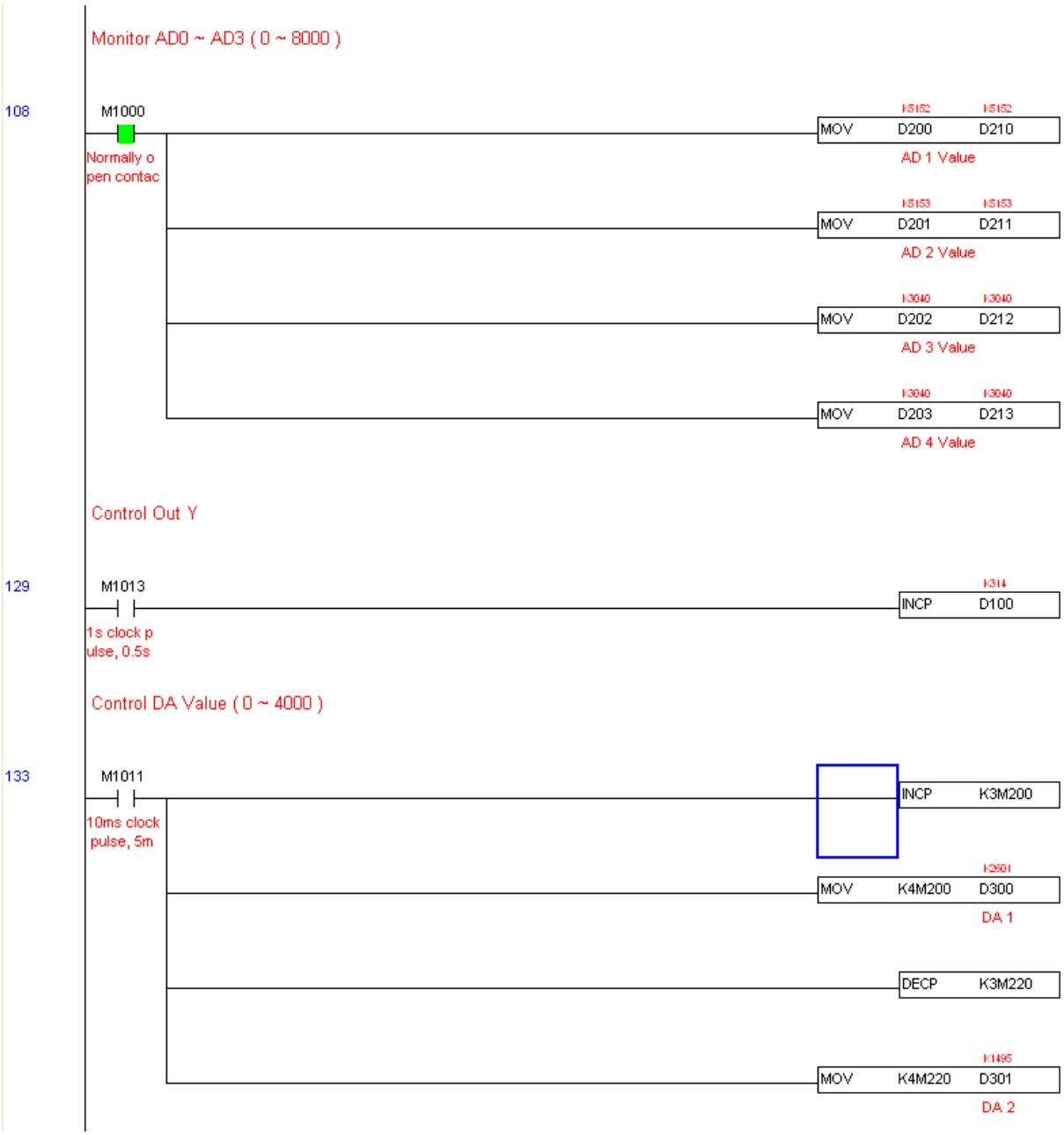
Monitor AD0 ~ AD3 ( 0 ~ 8000 )
108
M1000
Normally o
pen contac
K5152 K5152
MOV D200 D210
AD 1 Value
K5153 K5153
MOV D201 D211
AD 2 Value
K3040 K3040
MOV D202 D212
AD 3 Value
K3040 K3040
MOV D203 D213
AD 4 Value
Control Out Y
129
M1013
1s clock p
ulse, 0.5s
K314
INCP D100
Control DA Value ( 0 ~ 4000 )
133
M1011
10ms clock
pulse, 5m
INCP K3M200
K2601
MOV K4M200 D300
DA 1
DECP K3M220
K1495
MOV K4M220 D301
DA 2

# 16-12 Calendar functions

(KPC-CC01) is connected, and otherwise cannot be used. Currently-support commands include TCMP (comparison of calendar data), TZCP (calendar data range comparison), TADD (calendar data addition), TSUB (calendar data subtraction), and TRD (calendar reading). Please refer to the explanation of relevant commands and functions for the usage of these commands.

In real applications, the internal PLC can judge whether calendar function have been activated; if they have been activated, calendar warning codes may be displayed in some situations. The basis for whether a calendar function has been activated is whether the program has written the calendar time (D1063 to D1069) in connection with the foregoing calendar commands or programs.

The calendar's time display is currently assigned to D1063 to D1069, and is defined as follows:

| Special D | Item | Content | Attributes |
|---|---|---|---|
| D1063 | Year (Western) | 20xx (2000~2099) | RO |
| D1064 | Weeks | 1~7 | RO |
| D1065 | Month | 1~12 | RO |
| D1066 | Day | 1~31 | RO |
| D1067 | Hour | 0~23 | RO |
| D1068 | Minute | 0~59 | RO |
| D1069 | Second | 0~59 | RO |

Calendar-related special M items are defined as follows:

| Special D | Item | Attributes |
|---|---|---|
| M1068 | Calendar time error | RO |
| M1076 | Calendar time error or refresh time out | RO |
| M1036 | Ignore calendar warning | RW |

*When a program writes to the commands TCMP, TZCP, TADD, or TSUB, if it is discovered that a value exceeds the reasonable range, M1026 will be 1.

*When the keypad display is PLra (RTC correction warning) or PLrt (RTC time out warning), M1076 will be ON.

*When M1036 is 1, the PLC will ignore the calendar warning.

Calendar trigger warning code is defined as follows:

| Warning | Description | Reset approach | Whether it affects PLC operation |
|---|---|---|---|
| PLra | Calendar time correction | Requires power restart | Will not have any effect |
| PLrt | Calendar time refresh time out | Requires power restart | Will not have any effect |

*When the PLC's calendar functions are operating, if the keypad is replaced with another keypad, it will jump to PLra.

*When it is discovered at startup that the keypad has not been powered for more than 7 days, or the time is wrong, PLra will be triggered.

*When it is discovered that the CP2000 has no keypad 10 sec. after startup, PLrt will be triggered.

*If the keypad is suddenly pulled out while the calendar is operating normally, and is not reconnected for more than 1 minute, PLrt will be triggered.

Practical applications:

We will perform a demo of simple applications.

We first correct the keypad time. After pressing Menu on the keypad, select the 9th time setting option. After selection, set the current time.

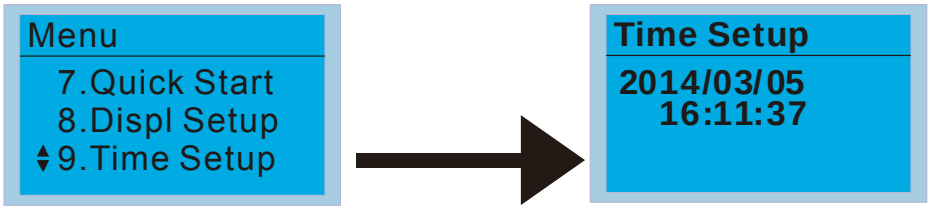


We set converter on during the period of 8:00-17:20, which allows us to write the following example

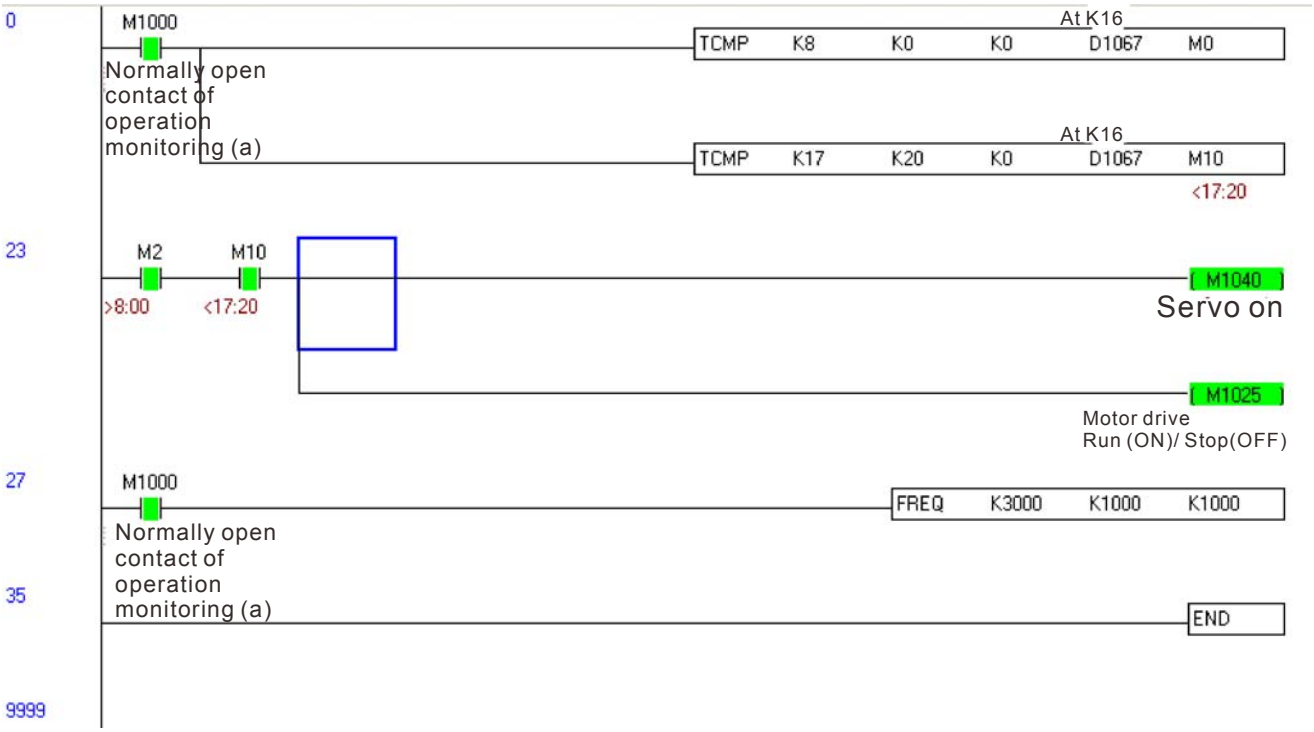

[ This page intentionally left blank ]

# *Chapter 17 Introduction to BACnet*

## 1. About BACnet:

**BACnet** is an ASHRAE communication protocol for **b**uilding **a**utomation and **c**ontrol **net**works. (ASHRAE: **A**merican **S**ociety of **H**eating, **R**efrigerating and Air-Conditioning **E**ngineers, Inc.). CP2000's BACnet is based on version 20004.

BACnet's regulations are related to several kinds of physical layers' interfaces. The physical layer built inside CP200 is achieved via MS/TP interface.

The BACnet of CP2000 supports a device type called B-ASC. B-ASC supports six types of services such as DS-RP-B, DS-RPM-B, DS-WP-B, DM-DDB-B, DM-DOB and DM-DCC-B.

## 2. CP2000 BACnet-Object and Property:

In CP2000, BACnet supports 3 object types: Device, AnalogValue (AV) and BinaryValue (BV). In each object type, we have to the following table to show the Properties list:

| Property ID | | Object Type | | |
|---|---|---|---|---|
| | | Device | Analog Value | Binary Value |
| #4 | ACTIVE TEXT | | | V |
| #11 | APDU_TIMEOUT | V | | |
| #12 | APPLICATION_SOFTWARE_VERSION | V | | |
| #28 | DESCRIPTION | V | V | V |
| #30 | DEVICE ADDRESS BINDING | V | V | |
| #36 | EVENT STATE | | V | V |
| #44 | FIRMWARE_REVISION | V | | |
| #46 | INACTIVE TEXT | | | V |
| #62 | MAX_APDU_LENGTH_ACCEPTED | V | | |
| #63 | MAX_INFO_FRAMES | V | | |
| #64 | MAX_MASTER | V | | |
| #70 | MODEL_NAME | V | | |
| #73 | NUMBER_OF_APDU_RETRIES | V | | |
| #75 | OBJECT_IDENTIFIER | V *1 | V | V |
| #76 | OBJECT_LIST | V | | |
| #77 | OBJECT_NAME | V *1 | V | V |
| #79 | OBJECT_TYPE | V | V | V |
| #81 | OUT OF SERVICE | | V | V |
| #85 | PRESENT VALUE | | V *2 | V *2 |
| #87 | PRIORITY ARRAY | | V *3 | V *3 |
| #96 | PROTOCOL_OBJECT_TYPES_SUPPORTED | V | | |

| Property ID | | Object Type | | |
|---|---|---|---|---|
| | | Device | Analog Value | Binary Value |
| #97 | PROTOCOL_SERVICES_SUPPORTED | V | | |
| #98 | PROTOCOL_VERSION | V | | |
| #104 | RELINQUISH DEFAULT | | V *3 | V *3 |
| #107 | SEGMENTATION_SUPPORTED | V | | |
| #111 | STATUS FLAGS | | V | V |
| #112 | SYSTEM_STATUS | V | | |
| #117 | UNITS | | V | |
| #120 | VENDOR_IDENTIFIER | V | | |
| #121 | VENDOR_NAME | V | | |
| #139 | PROTOCOL_REVISION | V | | |
| #155 | DATABASE_REVISION | V | | |

*1. The Object_ID and Object_Name Properties of Device are writeable.

*2. The Present_Value Property of some AV and BV objects is commendable.

*3. Only Commendable objects support Priority_Array and Relinquish_Default.

**The AV objects, we have commendable and readonly cases.**

- Commendable case: We can use Write_Service to access the Present_Value property of commendable AV objects. Thus, the commandable AV objects are linking to the Control_Word and Pr_Word in CP2000.
- Readonly case: We can use Read_Service to access the Present_Value property of readonly AV objects. Thus, these readonly AV objects are linking to the Status_Word in CP2000.

**The BV objects, we also have commandable and readonly cases.**

- Commendable case: We can use Write_Service to access the Present_Value property of commendable BV objects. Thus, the commandable BV objects are linking to the Control_Bit in CP2000.
- Readonly case: We can use Read_Service to access the Present_Value property of readonly BV objects. Thus, these readonly BV objects are linking to the Status_Bit in CP2000.

## 2.1 Commendable Analog Value Object

In CP20000, we have AV_000~AV_026 supporting commendable Presnet_Value property. For these AV_Objects, we also can use (Multi)Read_Service to access Priority_Array and Relinquish_Default properties.

| Object Number | R/W | Object Name | Object Description | Unit |
|---|---|---|---|---|
| AV 000 | RW | Reserved | Reserved | UNITS_NO_UNITS |
| AV 001 | RW | FreqRefValue | Frequency Reference Value | UNITS_HERTZ |
| AV 002 | RW | Reserved | Reserved | UNITS_NO_UNITS |
| AV 003 | RW | Reserved | Reserved | UNITS_NO_UNITS |
| AV 004 | RW | Reserved | Reserved | UNITS_NO_UNITS |
| AV 005 | RW | Reserved | Reserved | UNITS_NO_UNITS |
| AV 006 | RW | Reserved | Reserved | UNITS_NO_UNITS |
| AV 007 | RW | Reserved | Reserved | UNITS_NO_UNITS |

| Object Number | R/W | Object Name | Object Description | Unit |
|---|---|---|---|---|
| AV 008 | RW | Reserved | Reserved | UNITS_NO_UNITS |
| AV 009 | RW | Reserved | Reserved | UNITS_NO_UNITS |
| AV 010 | RW | Reserved | Reserved | UNITS_NO_UNITS |
| AV 011 | RW | (P9-11 map set) | AV11 will modify data which is P9-11 mapping to | Depends |
| AV 012 | RW | (P9-12 map set) | AV12 will modify data which is P9-12 mapping to | Depends |
| AV 013 | RW | (P9-13 map set) | AV13 will modify data which is P9-13 mapping to | Depends |
| AV 014 | RW | (P9-14 map set) | AV14 will modify data which is P9-14 mapping to | Depends |
| AV 015 | RW | (P9-15 map set) | AV15 will modify data which is P9-15 mapping to | Depends |
| AV 016 | RW | (P9-16 map set) | AV16 will modify data which is P9-16 mapping to | Depends |
| AV 017 | RW | (P9-17 map set) | AV17 will modify data which is P9-17 mapping to | Depends |
| AV 018 | RW | (P9-18 map set) | AV18 will modify data which is P9-18 mapping to | Depends |
| AV 019 | RW | (P9-19 map set) | AV19 will modify data which is P9-19 mapping to | Depends |
| AV 020 | RW | (P9-20 map set) | AV20 will modify data which is P9-20 mapping to | Depends |
| AV 021 | RW | (P9-21 map set) | AV21 will modify data which is P9-21 mapping to | Depends |
| AV 022 | RW | (P9-22 map set) | AV22 will modify data which is P9-22 mapping to | Depends |
| AV 023 | RW | (P9-23 map set) | AV23 will modify data which is P9-23 mapping to | Depends |
| AV 024 | RW | (P9-24 map set) | AV24 will modify data which is P9-24 mapping to | Depends |
| AV 025 | RW | (P9-25 map set) | AV25 will modify data which is P9-25 mapping to | Depends |
| AV 026 | RW | (P9-26 map set) | AV26 will modify data which is P9-26 mapping to | Depends |

## 2.2 Status (Readonly) Analog Value Object

In CP20000, we have AV_027~AV_068 with readonly Presnet_Value property. For these AV_Objects, we do NOT have Priority_Array and Relinquish_Default properties.

| Object Number | R/W | Object Name | Object Description | Unit |
|---|---|---|---|---|
| AV 027 | R | Reserved | Reserved | UNITS_NO_UNITS |
| AV 028 | R | Reserved | Reserved | UNITS_NO_UNITS |
| AV 029 | R | Reserved | Reserved | UNITS_NO_UNITS |
| AV 030 | R | Reserved | Reserved | UNITS_NO_UNITS |
| AV 031 | R | Output frequency | Display output frequency(Hz) | UNITS_HERTZ |
| AV 032 | R | Reserved | Reserved | UNITS_NO_UNITS |
| AV 033 | R | Reserved | Reserved | UNITS_NO_UNITS |
| AV 034 | R | Reserved | Reserved | UNITS_NO_UNITS |
| AV 035 | R | Output torque(%) | Display output torque(%) | UNITS_PERCENT |
| AV 036 | R | Reserved | Reserved | UNITS_NO_UNITS |
| AV 037 | R | Reserved | Reserved | UNITS_NO_UNITS |
| AV 038 | R | Reserved | Reserved | UNITS_NO_UNITS |
| AV 039 | R | Status word | Display status word,made from BV16~BV31 | UNITS_NO_UNITS |
| AV 040 | R | Reserved | Reserved | UNITS_NO_UNITS |

| Object Number | R/W | Object Name | Object Description | Unit |
|---|---|---|---|---|
| AV 041 | R | Driver type code | Driver type code | UNITS_NO_UNITS |
| AV 042 | R | Warn code | Warn code | UNITS_NO_UNITS |
| AV 043 | R | Error code | Error code | UNITS_NO_UNITS |
| AV 044 | R | Output current | Display output current(Amp) | UNITS_AMPERES |
| AV 045 | R | DC-bus voltage | Display DC-BUS voltage(Volt) | UNITS_VOLTS |
| AV 046 | R | Output Voltage | Display output voltage of U, V, W(Volt) | UNITS_VOLTS |
| AV 047 | R | Count Value | Display counter value of TRG terminal | UNITS_NO_UNITS |
| AV 048 | R | Power Angle | Display output power angle of U, V, W | UNITS_POWER_FACTOR |
| AV 049 | R | Output Power | Display actual output power of U, V, W(kw) | UNITS_KILOWATTS |
| AV 050 | R | IGBT temperature | Display the IGBT temperature | UNITS_DEGREES_CELSIUS |
| AV 051 | R | Temperature of driver | Display the temperature of capacitance | UNITS_DEGREES_CELSIUS |
| AV 052 | R | Real carry frequency | Display real carrier frequency of the drive(KHz) | UNITS_KILOHERTZ |
| AV 053 | R | PID feedback value | Display PID feedback value(%) | UNITS_PERCENT |
| AV 054 | R | Overload rate | Display overload condition(%) | UNITS_PERCENT |
| AV 055 | R | Ground fail detect level | Display GND fail detect level(%) | UNITS_PERCENT |
| AV 056 | R | DC bus ripple | Display DCbus voltage ripples(Volt) | UNITS_VOLTS |
| AV 057 | R | Fan Speed | Fan speed of the drive(%) | UNITS_PERCENT |
| AV 058 | R | Output speed(rpm) | Output speed(rpm) | UNITS_REVOLUTIONS_PER_MINUTE |
| AV 059 | R | KW per Hour | KW per Hour | UNITS_KILOWATTS |
| AV 060 | R | Multi-speed switch | Real multi-speed switch | UNITS_NO_UNITS |
| AV 061 | R | AVI input value | 0~10V corresponds to 0~100% | UNITS_PERCENT |
| AV 062 | R | ACI input value | 4~20mA/0~10V corresponds to 0~100% | UNITS_PERCENT |
| AV 063 | R | AUI input value | -10V~10V corresponds to -100~100% | UNITS_PERCENT |
| AV 064 | R | Digital input status | Refer to P2-12 | UNITS_NO_UNITS |
| AV 065 | R | Digital output status | Refer to P2-18 | UNITS_NO_UNITS |
| AV 066 | R | CPU pin status of DI | Corresponding CPU pin status of digital input | UNITS_NO_UNITS |
| AV 067 | R | CPU pin status of DO | Corresponding CPU pin status of digital output | UNITS_NO_UNITS |
| AV 068 | R | PLC D1043 value | PLC D1043 value | UNITS_NO_UNITS |

## 2.3 Commandable Binary Value Object

In CP20000, we have BV_000~BV_015 supporting commendable Presnet_Value property. For these BV_Objects, we also can use (Multi)Read_Service to access Priority_Array and Relinquish_Default properties.

| Object Number | R/W | Object Name | Object Description |
|---|---|---|---|
| BV 000 | RW | ACTIVE CMD | (0)FreqCmd=0;(1)FreqCmd=FreqRefValue |
| BV 001 | RW | FWD/REV CMD | (0)Forward; (1)Reverse |
| BV 002 | RW | Reserved | Reserved |
| BV 003 | RW | HALT CMD | (0)None;(1)RampDown to 0Hz. |
| BV 004 | RW | LOCK CMD | (0)None;(1)OutputFreq stays at current freqency |
| BV 005 | RW | Reserved | Reserved |
| BV 006 | RW | QSTOP CMD | (0)None;(1)Force driver quick stop |
| BV 007 | RW | ServoPower CMD | (0)PowerOff(free run to stop);(1)PowerOn |
| BV 008 | RW | Reserved | Reserved |
| BV 009 | RW | Reserved | Reserved |
| BV 010 | RW | Reserved | Reserved |
| BV 011 | RW | Reserved | Reserved |
| BV 012 | RW | Reserved | Reserved |
| BV 013 | RW | Reserved | Reserved |
| BV 014 | RW | Reserved | Reserved |
| BV 015 | RW | RESET | RESET:(0)Do nothing;(1)Reset fault |

## 2.4 Status (Readonly) Binary Value Object

In CP20000, we have BV_016~BV_031 with readonly Presnet_Value property. For these BV_Objects, we do NOT have Priority_Array and Relinquish_Default properties.

| Object Number | R/W | Object Name | Object Description |
|---|---|---|---|
| BV 016 | R | ARRIVE STATE | (0)Not yet;(1)Arrive (OutputFreq=FreqCmd) |
| BV 017 | R | FWD/REV STATE | (0)Forward;(1)Reverse |
| BV 018 | R | WARN STATE | (0)No Warn;(1)Occur Warn |
| BV 019 | R | ERROR STATE | (0)No Error;(1)Occur Error |
| BV 020 | R | Reserved | Reserved |
| BV 021 | R | Reserved | Reserved |
| BV 022 | R | QSTOP STATE | (0)No QSTOP;(1)Occur QSTOP |
| BV 023 | R | SerovPower STATE | (0)PowerOff(free run to stop);(1)PowerOn |
| BV 024 | R | Reserved | Reserved |
| BV 025 | R | Reserved | Reserved |
| BV 026 | R | Reserved | Reserved |
| BV 027 | R | Reserved | Reserved |

| Object Number | R/W | Object Name | Object Description |
|---|---|---|---|
| BV 028 | R | Reserved | Reserved |
| BV 029 | R | Reserved | Reserved |
| BV 030 | R | Reserved | Reserved |
| BV 031 | R | Reserved | Reserved |

# 3. Steps to setup the Pr about BACnet in CP2000

Related to BACnet function in CP2000, We have to configure 2 parts of Pr.

Part1. Setup parameters related to Communication at Pr_Group9.

Part2. Setup parameters related to System_Parameter at Pr_Group0.

## Part1. Pr_Group9, Communication.

1-1. Set Pr09-31 =1, BACnet is enabled, then the COM1_Port will be accessed by BACnet. When this is set, the COM1_Port communication format will be changed to RTU 8N1.

(Note: The HW Pins of COM1_Port are shared by RJ45 and RS485. When BACnet is enabled, BACnet will access the COM1_Port, that also means we can **NOT** have Modbus, PLC connections, VFDSoft and VFD Explorer by COM1_Port).

1-2. Set Pr09-50, Default = 10, BACnet's MS/TP station number 0~127

1-3. Set Pr09-51, Default = 38400, BACnet communication baud rate, 9600, 19200, 38400 or 76800bps.

1-4. Set Pr09-52 and Pr09-53, The default setting of Device Object_Identifier is 0x000A (Pr09-52=10, Pr09-53=00). Device Object_Identifier is the combination of Pr09-52 and Pr09-53, thus the setting range can be 0~4194303.

For example, Pr09-53=12(0Ch) and Pr09-52 =3456(0D80h), then the device Identifier's value =12*65536+3456 =789888(0C0D80h).

1-5. Set Pr09-55, Default =127, the highest allowable address for master nodes on the same MS/TP network. CP2000 base on this setting to know the Max search range.

1-6. Set Pr09-56, setup the BACnet password. If setup is successful, the keypad will display 8888.

## Part2. Pr_Group0, System Parameter.

2-1. Set Pr00-20 =1, That means the source of the Frequency command is from RS485 Interface (accessed by BACnet).

2-2. Set Pr00-21 =2, That means the source of the Operation command is from RS485 Interface (accessed by BACnet).

## Here is a simple example:

After setting up the 2 parts of Pr, we can enable the BACnet function in CP2000. Thus, we can access some BACnet objects to make the CP2000 driving motor Run or Stop.

Step1. Write_Service on AV_001, Present_Value =60.0 ➔ Setup Frequency Reference Value.

Step2. Write_Service on BV_007, Present_Value =Active. ➔ Setup Servo PowerOn.

Step3. Write_Service on BV_000, Present_Value =Active. ➔ Setup Active CMD.

Step4. Read_Service on AV_031, Present_Value ➔ User can know the Output frequency.

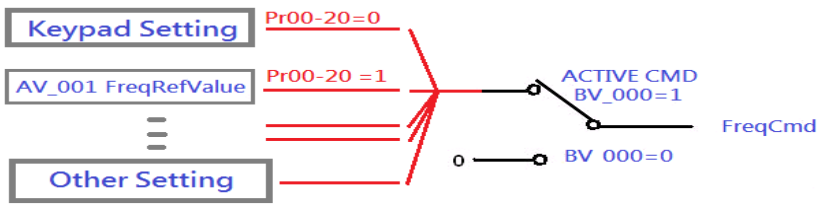


PS. In CP2000, base on different Pr setting or IO setting, we can make FreqCmd with different source of Reference Value.

PLS check the usage of Keypad, Pr and IO setting for more detail information.

- Then connection of the communication cable as shown in the below diagram.
  Please note that HW Pins of COM1_Port are shared by RJ45 and RS485. That means user can use RJ45_cable or RS485_lines to access the COM1_Port.
  When BACnet is enabled, COM1_Port will be dominated by BACnet function. Under this condition, user will not be able to have MODBUS or PLC function on COM1_Port.

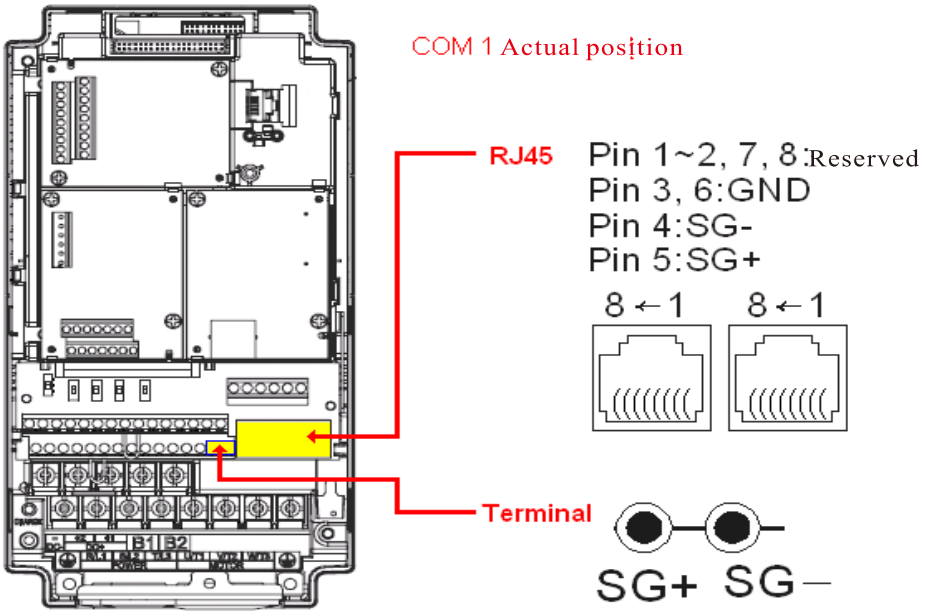

**BACnet Protocol Implementation Conformance Statement**

**Date**：July 24, 2014

**Vendor Name:** Delta Electronics, Inc.

**Product Name:** CP2000

**Product Model Number:** VFD-CP2000

**Applications Software Version:** Ver 01.04- yyyymm **Firmware Revision:** Ver 01.04 **BACnet Protocol Revision:** 7

**Product Description:**

Delta VFD-CP2000 is a Variable Frequency AC motor Drive with BACnet embedded.

In VFD-CP2000, the BACnet connection is by MS/TP, RS485-based. VFD-CP2000 provides a BACnet communication function that permits it as a server and supports BIBBs defined by the BACnet B-ASC. VFD-CP2000 BACnet provides the capability to control and monitor the VFD-CP2000 machine.

**BACnet Standardized Device Profile (Annex L):**

☐ **BACnet Operator Workstation (B-OWS)_**

☐ **BACnet Building Controller (B-BC)**

☐ **BACnet Advanced Application Controller (B-AAC)_**

■ **BACnet Application Specific Controller (B-ASC)**

☐ **BACnet Smart Sensor (B-SS)**

☐ **BACnet Smart Actuator (B-SA)**

**List all BACnet Interoperability Building Blocks Supported (Annex K):**

**Data Sharing BIBBs**

Data Sharing-ReadProperty-B (DS-RP-B)

Data Sharing-WriteProperty-B (DS-WP-B)

Data Sharing-ReadPropertyMultiple-B (DS-RPM-B)

**Device and Network Management BIBBs**

Device Management-Dynamic Device Binding-B (DM-DDB-B)

Device Management-Dynamic Object Binding-B (DM-DOB-B)

Device Management-DeviceCommunicationControl-B (DM-DCC-B)

**Segmentation Capability:**

☐ Segmented requests supported Window Size _____

☐ Segmented responses supported Window Size _____

**Standard Object Types Supported:**

Analog Value

Binary Value

Device

Object instantiation is static. Refer to table at end of this document for object details.

**Data Link Layer Options:**

☐ BACnet IP, (Annex J)

☐ BACnet IP, (Annex J), Foreign Device

☐ ISO 8802-3, Ethernet (Clause 7)

☐ ANSI/ATA 878.1, 2.5 Mb. ARCNET (Clause 8)

☐ ANSI/ATA 878.1, RS-485 ARCNET (Clause 8), baud rate(s) _____

■ MS/TP master (Clause 9), baud rate(s): 9600, 19200, 38400, 76800

☐ MS/TP slave (Clause 9), baud rate(s): _____

☐ Point-To-Point, EIA 232 (Clause 10), baud rate(s):_____

☐ Point-To-Point, modem, (Clause 10), baud rate(s): _____

☐ LonTalk, (Clause 11), medium: _____

☐ Other: _____

**Device Address Binding:**

Is static device binding supported? (This is currently necessary for two-way communication with MS/TP slaves and certain other devices.) ☐Yes ■No

**Networking Options:**

☐ Router, Clause 6 - List all routing configurations, e.g., ARCNET-Ethernet, Ethernet-MS/TP, etc.

☐ Annex H, BACnet Tunneling Router over IP

☐ BACnet/IP Broadcast Management Device (BBMD)

Does the BBMD support registrations by Foreign Devices? ☐ Yes ☐ No

**Character Sets Supported:**

Indicating support for multiple character sets does not imply that they can all be supported simultaneously.

| | | |
|---|---|---|
| ■ ANSI X3.4 | ☐ IBM™/Microsoft™ DBCS | ☐ ISO 8859-1 |
| ☐ ISO 10646 (UCS-2) | ☐ ISO 10646 (UCS-4) | ☐ JIS C 6226 |

**If this product is a communication gateway, describe the types of non-BACnet equipment/networks(s) that the gateway supports:**

_____

_____

## The Properties of Objects

| Property ID | | Object Type | | |
|---|---|---|---|---|
| | | **Device** | **Analog Value** | **Binary Value** |
| #4 | ACTIVE TEXT | | | V |
| #11 | APDU_TIMEOUT | V | | |
| #12 | APPLICATION_SOFTWARE_VERSION | V | | |
| #28 | DESCRIPTION | V | V | V |
| #30 | DEVICE ADDRESS BINDING | V | V | |
| #36 | EVENT STATE | | V | V |
| #44 | FIRMWARE_REVISION | V | | |
| #46 | INACTIVE TEXT | | | V |
| #62 | MAX_APDU_LENGTH_ACCEPTED | V | | |
| #63 | MAX_INFO_FRAMES | V | | |
| #64 | MAX_MASTER | V | | |
| #70 | MODEL_NAME | V | | |
| #73 | NUMBER_OF_APDU_RETRIES | V | | |
| #75 | OBJECT_IDENTIFIER | **V *1** | V | V |
| #76 | OBJECT_LIST | V | | |
| #77 | OBJECT_NAME | **V *1** | V | V |
| #79 | OBJECT_TYPE | V | V | V |
| #81 | OUT OF SERVICE | | V | V |
| #85 | PRESENT VALUE | | **V *2** | **V *2** |
| #87 | PRIORITY ARRAY | | V *3 | V *3 |
| #96 | PROTOCOL_OBJECT_TYPES_SUPPORTED | V | | |
| #97 | PROTOCOL_SERVICES_SUPPORTED | V | | |
| #98 | PROTOCOL_VERSION | V | | |
| #104 | RELINQUISH DEFAULT | | V *3 | V *3 |
| #107 | SEGMENTATION_SUPPORTED | V | | |
| #111 | STATUS FLAGS | | V | V |
| #112 | SYSTEM_STATUS | V | | |
| #117 | UNITS | | V | |
| #120 | VENDOR_IDENTIFIER | V | | |
| #121 | VENDOR_NAME | V | | |
| #139 | PROTOCOL_REVISION | V | | |
| #155 | DATABASE_REVISION | V | | |

*1. The Object_ID and Object_Name Properties of Device are writeable.

*2. The Present_Value Property of some AV and BV objects are commandable.

*3. Only Commandable objects support Priority_Array and Relinquish_Default.

## Commandable Analog Value Object

In VFD-CP2000, we have AV_000~AV_026 supporting commandable Presnet_Value property. In these AV_Objects, we also can use (Multi)Read_Service to access Priority_Array and Relinquish_Default properties.

| Object Number | R/W | Object Name | Object Description | Unit |
|---|---|---|---|---|
| AV 000 | RW | AV_000_Reserved | Reserved | UNITS_NO_UNITS |
| AV 001 | RW | AV_001_FreqRefValue | Frequency Reference Value | UNITS_HERTZ |
| AV 002 | RW | AV_002_Reserved | Reserved | UNITS_NO_UNITS |
| AV 003 | RW | AV_003_Reserved | Reserved | UNITS_NO_UNITS |
| AV 004 | RW | AV_004_Reserved | Reserved | UNITS_NO_UNITS |
| AV 005 | RW | AV_005_Reserved | Reserved | UNITS_NO_UNITS |
| AV 006 | RW | AV_006_Reserved | Reserved | UNITS_NO_UNITS |
| AV 007 | RW | AV_007_Reserved | Reserved | UNITS_NO_UNITS |
| AV 008 | RW | AV_008_Reserved | Reserved | UNITS_NO_UNITS |
| AV 009 | RW | AV_009_Reserved | Reserved | UNITS_NO_UNITS |
| AV 010 | RW | AV_010_Reserved | Reserved | UNITS_NO_UNITS |
| AV 011 | RW | AV_011_P9-11 map set= ----- | AV11 will modify data which is P9-11 mapping to | Depends |
| AV 012 | RW | AV_012_P9-12 map set= ----- | AV12 will modify data which is P9-12 mapping to | Depends |
| AV 013 | RW | AV_013_P9-13 map set= ----- | AV13 will modify data which is P9-13 mapping to | Depends |
| AV 014 | RW | AV_014_P9-14 map set= ----- | AV14 will modify data which is P9-14 mapping to | Depends |
| AV 015 | RW | AV_015_P9-15 map set= ----- | AV15 will modify data which is P9-15 mapping to | Depends |
| AV 016 | RW | AV_016_P9-16 map set= ----- | AV16 will modify data which is P9-16 mapping to | Depends |
| AV 017 | RW | AV_017_P9-17 map set= ----- | AV17 will modify data which is P9-17 mapping to | Depends |
| AV 018 | RW | AV_018_P9-18 map set= ----- | AV18 will modify data which is P9-18 mapping to | Depends |
| AV 019 | RW | AV_019_P9-19 map set= ----- | AV19 will modify data which is P9-19 mapping to | Depends |
| AV 020 | RW | AV_020_P9-20 map set= ----- | AV20 will modify data which is P9-20 mapping to | Depends |
| AV 021 | RW | AV_021_P9-21 map set= ----- | AV21 will modify data which is P9-21 mapping to | Depends |
| AV 022 | RW | AV_022_P9-22 map set= ----- | AV22 will modify data which is P9-22 mapping to | Depends |
| AV 023 | RW | AV_023_P9-23 map set= ----- | AV23 will modify data which is P9-23 mapping to | Depends |
| AV 024 | RW | AV_024_P9-24 map set= ----- | AV24 will modify data which is P9-24 mapping to | Depends |
| AV 025 | RW | AV_025_P9-25 map set= ----- | AV25 will modify data which is P9-25 mapping to | Depends |
| AV 026 | RW | AV_026_P9-26 map set= ----- | AV26 will modify data which is P9-26 mapping to | Depends |

## Status (Readonly) Analog Value Object

In VFD-CP2000, we have AV_027~AV_068 with readonly Presnet_Value property. In these AV_Objects, we do NOT have Priority_Array and Relinquish_Default properties.

| Object Number | R/W | Object Name | Object Description | Unit |
|---|---|---|---|---|
| AV 027 | R | AV_027_Reserved | Reserved | UNITS_NO_UNITS |
| AV 028 | R | AV_028_Reserved | Reserved | UNITS_NO_UNITS |
| AV 029 | R | AV_029_Reserved | Reserved | UNITS_NO_UNITS |
| AV 030 | R | AV_030_Reserved | Reserved | UNITS_NO_UNITS |
| AV 031 | R | AV_031_Output frequency | Display output frequency(Hz) | UNITS_HERTZ |
| AV 032 | R | AV_032_Reserved | Reserved | UNITS_NO_UNITS |
| AV 033 | R | AV_033_Reserved | Reserved | UNITS_NO_UNITS |
| AV 034 | R | AV_034_Reserved | Reserved | UNITS_NO_UNITS |
| AV 035 | R | AV_035_Output torque(%) | Display output torque(%) | UNITS_PERCENT |
| AV 036 | R | AV_036_Reserved | Reserved | UNITS_NO_UNITS |
| AV 037 | R | AV_037_Reserved | Reserved | UNITS_NO_UNITS |
| AV 038 | R | AV_038_Reserved | Reserved | UNITS_NO_UNITS |
| AV 039 | R | AV_039_Status word | Display status word,made from BV16~BV31 | UNITS_NO_UNITS |
| AV 040 | R | AV_040_Reserved | Reserved | UNITS_NO_UNITS |
| AV 041 | R | AV_041_Driver type code | Driver type code | UNITS_NO_UNITS |
| AV 042 | R | AV_042_Warn code | Warn code | UNITS_NO_UNITS |
| AV 043 | R | AV_043_Error code | Error code | UNITS_NO_UNITS |
| AV 044 | R | AV_044_Output current | Display output current(Amp) | UNITS_AMPERES |
| AV 045 | R | AV_045_DC-bus voltage | Display DC-BUS voltage(Volt) | UNITS_VOLTS |
| AV 046 | R | AV_046_Output Voltage | Display output voltage of U, V, W(Volt) | UNITS_VOLTS |
| AV 047 | R | AV_047_Count Value | Display counter value of TRG terminal | UNITS_NO_UNITS |
| AV 048 | R | AV_048_Power Angle | Display output power angle of U, V, W | UNITS_POWER_FACTOR |
| AV 049 | R | AV_049_Output Power | Display actual output power of U, V, W(kw) | UNITS_KILOWATTS |
| AV 050 | R | AV_050_IGBT temperature | Display the IGBT temperature | UNITS_DEGREES_CELSIUS |
| AV 051 | R | AV_051_Temperature of driver | Display the temperature of capacitance | UNITS_DEGREES_CELSIUS |
| AV 052 | R | AV_052_Real carry frequency | Display real carrier frequency of the drive(KHz) | UNITS_KILOHERTZ |
| AV 053 | R | AV_053_PID feedback value | Display PID feedback value(%) | UNITS_PERCENT |
| AV 054 | R | AV_054_Overload rate | Display overload condition(%) | UNITS_PERCENT |
| AV 055 | R | AV_055_Ground fail detect level | Display GND fail detect level(%) | UNITS_PERCENT |
| AV 056 | R | AV_056_DC bus ripple | Display DCbus voltage ripples(Volt) | UNITS_VOLTS |
| AV 057 | R | AV_057_Fan Speed | Fan speed of the drive(%) | UNITS_PERCENT |
| AV 058 | R | AV_058_Output speed(rpm) | Output speed(rpm) | UNITS_REVOLUTIONS_PER_MINUTE |

| Object Number | R/W | Object Name | Object Description | Unit |
|---|---|---|---|---|
| AV 059 | R | AV_059_KW per Hour | KW per Hour | UNITS_KILOWATTS |
| AV 060 | R | AV_060_Multi-speed switch | Real multi-speed switch | UNITS_NO_UNITS |
| AV 061 | R | AV_061_AVI input value | 0~10V corresponds to 0~100% | UNITS_PERCENT |
| AV 062 | R | AV_062_ACI input value | 4~20mA/0~10V corresponds to 0~100% | UNITS_PERCENT |
| AV 063 | R | AV_063_AUI input value | -10V~10V corresponds to -100~100% | UNITS_PERCENT |
| AV 064 | R | AV_064_Digital input status | Refer to P2-12 | UNITS_NO_UNITS |
| AV 065 | R | AV_065_Digital output status | Refer to P2-18 | UNITS_NO_UNITS |
| AV 066 | R | AV_066_CPU pin status of DI | Corresponding CPU pin status of digital input | UNITS_NO_UNITS |
| AV 067 | R | AV_067_CPU pin status of DO | Corresponding CPU pin status of digital output | UNITS_NO_UNITS |
| AV 068 | R | AV_068_PLC D1043 value | PLC D1043 value | UNITS_NO_UNITS |

- **Commendable Binary Value Object**

In VFD-CP2000, we have BV_000~BV_015 supporting commandable Presnet_Value property. In these BV_Objects, we also can use (Multi)Read_Service to access Priority_Array and Relinquish_Default properties.

| Object Number | R/W | Object Name | Object Description |
|---|---|---|---|
| BV 000 | RW | BV_000_ACTIVE CMD | (0)FreqCmd=0;(1)FreqCmd=FreqRefValue |
| BV 001 | RW | BV_001_FWD/REV CMD | (0)Forward; (1)Reverse |
| BV 002 | RW | BV_002_Reserved | Reserved |
| BV 003 | RW | BV_003_HALT CMD | (0)None;(1)RampDown to 0Hz. |
| BV 004 | RW | BV_004_LOCK CMD | (0)None;(1)OutputFreq stays at current freqency |
| BV 005 | RW | BV_005_Reserved | Reserved |
| BV 006 | RW | BV_006_QSTOP CMD | (0)None;(1)Force driver quick stop |
| BV 007 | RW | BV_007_ServoPower CMD | (0)PowerOff(free run to stop);(1)PowerOn |
| BV 008 | RW | BV_008_Reserved | Reserved |
| BV 009 | RW | BV_009_Reserved | Reserved |
| BV 010 | RW | BV_010_Reserved | Reserved |
| BV 011 | RW | BV_011_Reserved | Reserved |
| BV 012 | RW | BV_012_Reserved | Reserved |
| BV 013 | RW | BV_013_Reserved | Reserved |
| BV 014 | RW | BV_014_Reserved | Reserved |
| BV 015 | RW | BV_015_RESET | RESET:(0)Do nothing;(1)Reset fault |

- **Status (Readonly) Binary Value Object**

In VFD-CP2000, we have BV_016~BV_031 with readonly Presnet_Value property. In these BV_Objects, we do NOT have Priority_Array and Relinquish_Default properties.

| Object Number | R/W | Object Name | Object Description |
|---|---|---|---|
| BV 016 | R | BV_016_ARRIVE STATE | (0)Not yet;(1)Arrive (OutputFreq=FreqCmd) |
| BV 017 | R | BV_017_FWD/REV STATE | (0)Forward;(1)Reverse |
| BV 018 | R | BV_018_WARN STATE | (0)No Warn;(1)Occur Warn |
| BV 019 | R | BV_019_ERROR STATE | (0)No Error;(1)Occur Error |
| BV 020 | R | BV_020_Reserved | Reserved |
| BV 021 | R | BV_021_Reserved | Reserved |
| BV 022 | R | BV_022_QSTOP STATE | (0)No QSTOP;(1)Occur QSTOP |
| BV 023 | R | BV_023_SerovPower STATE | (0)PowerOff(free run to stop);(1)PowerOn |
| BV 024 | R | BV_024_Reserved | Reserved |
| BV 025 | R | BV_025_Reserved | Reserved |
| BV 026 | R | BV_026_Reserved | Reserved |
| BV 027 | R | BV_027_Reserved | Reserved |
| BV 028 | R | BV_028_Reserved | Reserved |
| BV 029 | R | BV_029_Reserved | Reserved |
| BV 030 | R | BV_030_Reserved | Reserved |
| BV 031 | R | BV_031_Reserved | Reserved |

[ This page intentionally left blank ]

# *Chapter 18 Safe Torque Off Function*

18-1 The drive safety function failure rate
18-2 Safe Torque Off terminal function description
18-3 Wiring diagram
18-4 Parameter
18-5 Operating sequence description
18-6 New Error code for STO function

## 18-1 The drive safe function failure rate

| Item | Definition | Standard | Performance |
|---|---|---|---|
| SFF | Safe Torque Off | IEC61508 | Channel 1: 80.08%<br>Channel 2: 68.91% |
| HFT<br>(Type A subsystem) | Hardware Fault Tolerance | IEC61508 | 1 |
| SIL | Safety Integrity Level | IEC61508 | SIL 2 |
| | | IEC62061 | SILCL 2 |
| PFH | Average frequency of dangerous failure [h-1] | IEC61508 | $9.56\times10^{-10}$ |
| $PFD_{av}$ | Probability of Dangerous Failure on Demand | IEC61508 | $4.18\times10^{-6}$ |
| Category | Category | ISO13849-1 | Category 3 |
| PL | Performance level | ISO13849-1 | d |
| $MTTF_d$ | Mean time to dangerous failure | ISO13849-1 | High |
| DC | Diagnostic coverage | ISO13849-1 | Low |

## 18-2 Safe Torque Off terminal function description

The safety Torque Off function is to cut off the power supply to motor through the hardware, thereby the motor couldn't produce torque.

The safety Torque Off function is respectively by two independent hardware to control the motor current drive signal, and thus cut off the inverter power module output in order to achieve the status of safety stop.

Operation principle Description as below table 1:

Table 1: Terminal operation description

| Signal | Channel | Photo-coupler status | | | |
|---|---|---|---|---|---|
| STO signal | STO1~SCM1 | ON (High) | ON (High) | OFF (Low) | OFF (Low) |
| | STO2~SCM2 | ON (High) | OFF (Low) | ON (High) | OFF (Low) |
| Driver Output status | | Ready | STL2 mode (Torque output off) | STL1 mode (torque output off) | STO mode (Torque output off) |

- STO means Safe Torque Off
- STL1~STL3 means Safety Torque Off hardware abnormal.
- STL3 means STO1~SCM1 and STO2~SCM2 internal circuit detected abnormal.
- STO1~SCM1 ON(High): means STO1~SCM1has connect to a +24VDC power supply.
- STO2~SCM2 ON(High): means STO2~SCM2 has connect to a +24V power supply.
- STO1~SCM1 OFF(Low): means STO1~SCM1hasn't connect to a +24VDC power supply.
- STO2~SCM2 OFF(Low): means STO2~SCM2hasn't connect to a +24VDC power supply.

## 18-3 Wiring diagram

18-3-1Internal STO circuit as below:

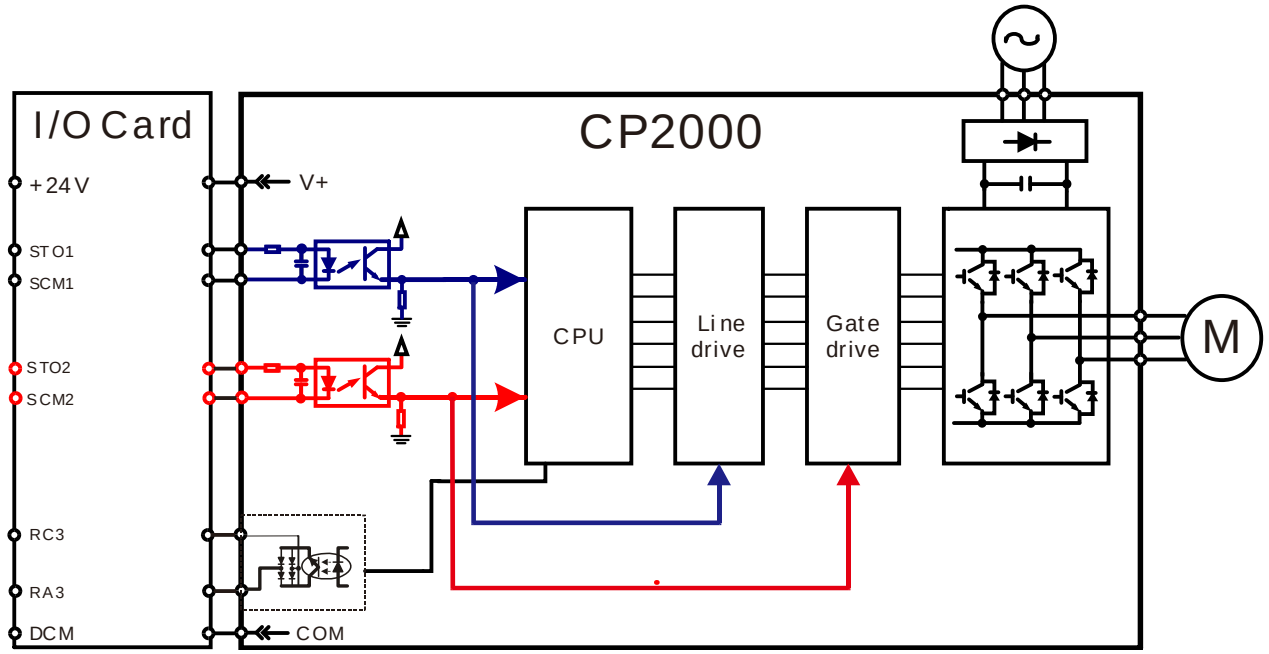


18-3-2 In the figure below, the factory setting for +24V-STO1-STO2 and SCM1-SCM2-DCM is short circuit:

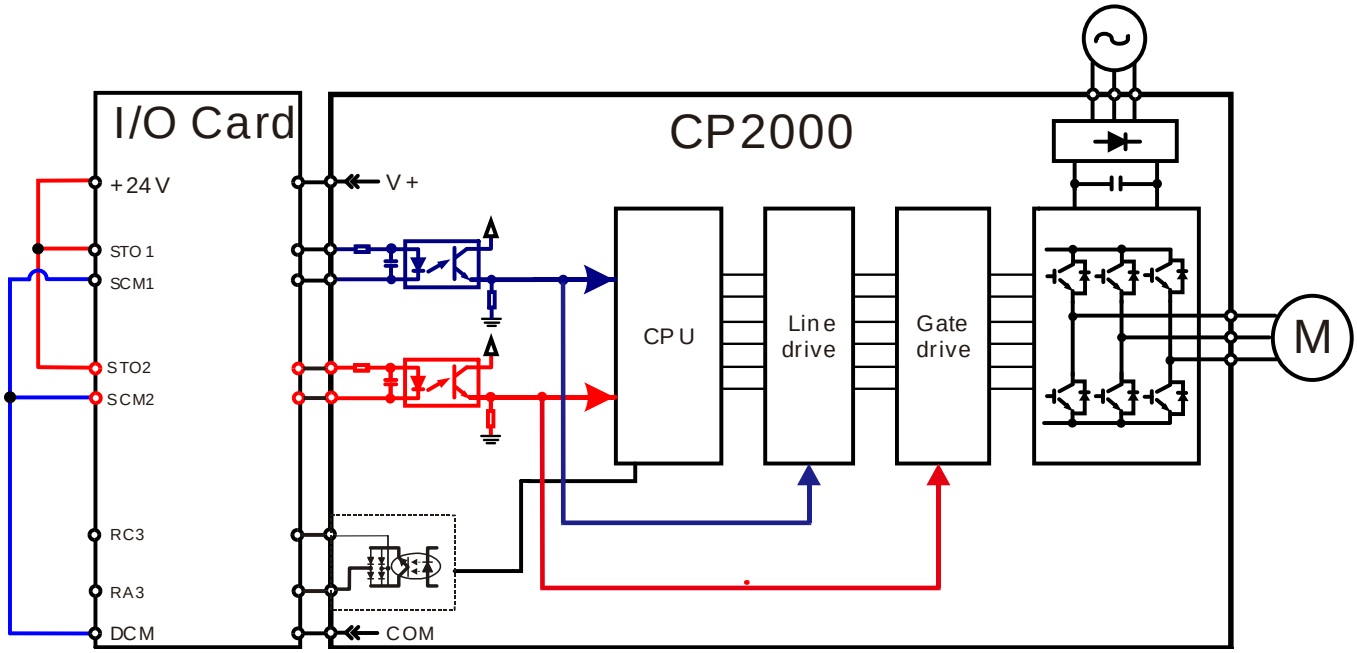

18-3-3 The control loop wiring diagram:

1. Remove the shot-circuit of +24V-STO1-STO2 and DCM-SCM1-SCM2.
2. The wiring as below diagram. The ESTOP switch must at Close status in normal situation and drive will be able to Run.
3. STO mode, switch ESTOP open. Drive output stop and keypad display STO.

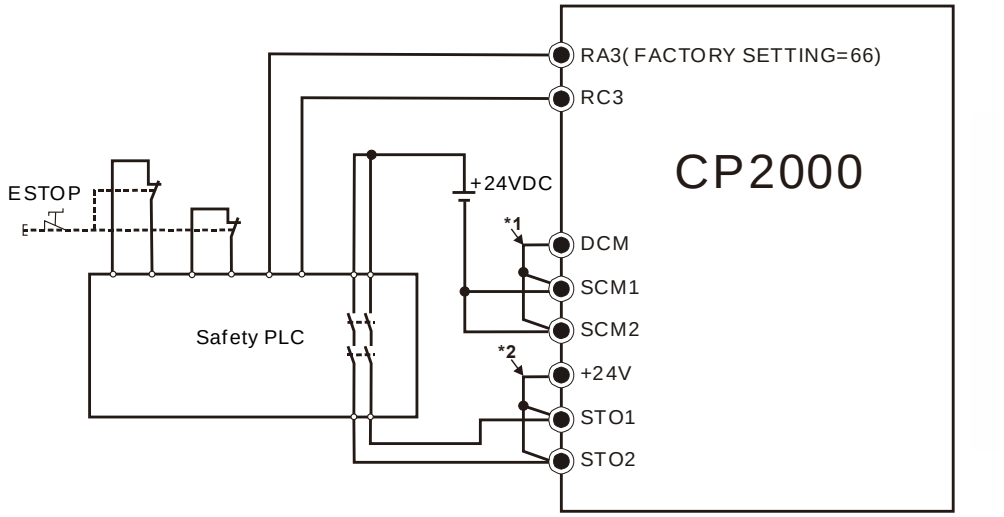


NOTE

*1: factory short circuit of DCM-SCM1-SCM2. To use the Safety function, please remove this short circuit

*2: factory short circuit of +24V-STO1-STO2. to use the Safety function, please remove this short circuit.

## 18-4 Parameter

### 06-44 STO Alarm Latch

Factory setting: 0

Settings 0：STO Alarm Latch
1：STO Alarm no Latch

- Pr06-44=0 STO Alarm Latch: after the reason of STO Alarm is cleared, a Reset command is need to clear STO Alarm.
- Pr06-44=1 STO Alarm no Latch: after the reason of STO Alarm is cleared, the STO Alarm will be cleared automatically.
- All of STL1~STL3 error are “Alarm latch” mode (in STL1~STL3 mode, the Pr06-44 function is no effective).

### 02-13 Multi-function Output 1 (Relay1)

Factory Setting:11

### 02-14 Multi-function Output 2 (Relay2)

Factory Setting:1

### 02-15 Multi-function Output 3 (Relay3)

Factory Setting:66

Settings
66: SO N.O. output
68: SO N.C. output

| Settings | Functions | Descriptions |
|---|---|---|
| 66 | SO Logic A output | Safety Output Normal Open |
| 68 | SO Logic B output | Safety Output Normal Close |

- CP2000 factory setting Pr02-17(MO2)=66(N.O.) and Multi-function Output setting item has add 2 new function: 66 and 68.

| Drive status | Safety Output status | |
|---|---|---|
| | N.O. (MO=66) | N.C. (MO=68) |
| Normal run | Open | Close |
| STO | Close | Open |
| STL1~STL3 | Close | Open |

### 00-04 Content of Multi-function Display

Factory setting: 3

Settings 45: Hardware version

| | |
|---|---|
| 00-04=45 | Hardware version |

## 18-5 Operating sequence description

18-5-1Normal operation status

As shown in Figure 3: When the STO1~SCM1 and STO2~SCM2=ON (no STO function is need),

the drive will execute “Operating” or “Output Stop” according to RUN/STOP command.

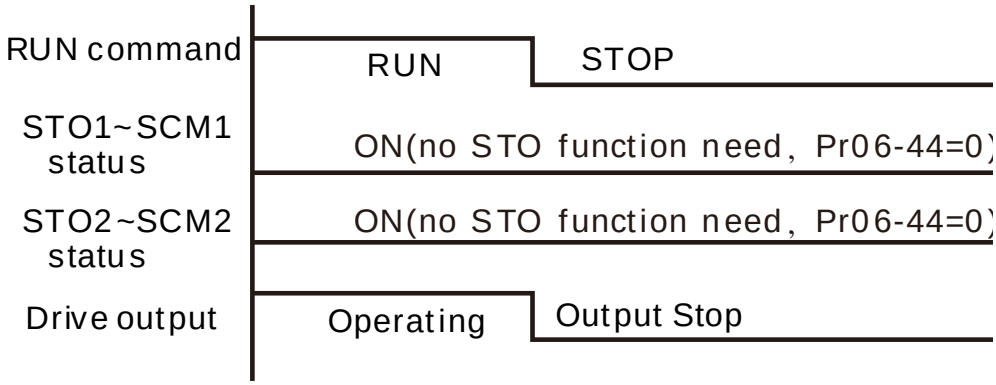


Figure 3

18-5-2-1 STO，Pr06-44=0，Pr02-35=0

As shown in Figure 4: When both of STO1~SCM1 and STO2~SCM2 channel has turn off during

operating, the STO function enabling and the drive will stop output regardless of Run command is

ON or OFF status.

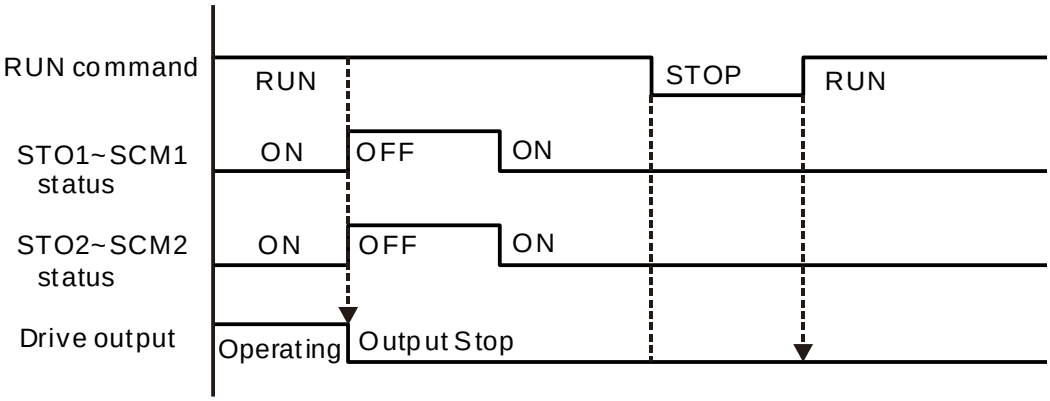


Figure 4

18-5-2-2 STO，Pr06-44=0，Pr02-35=1

As shown in Figure 5: As same as the figure 4. But, because the Pr02-35=1, therefore, after the

Reset command, if the operating command still exists, then the drive will immediately execute the run command again.

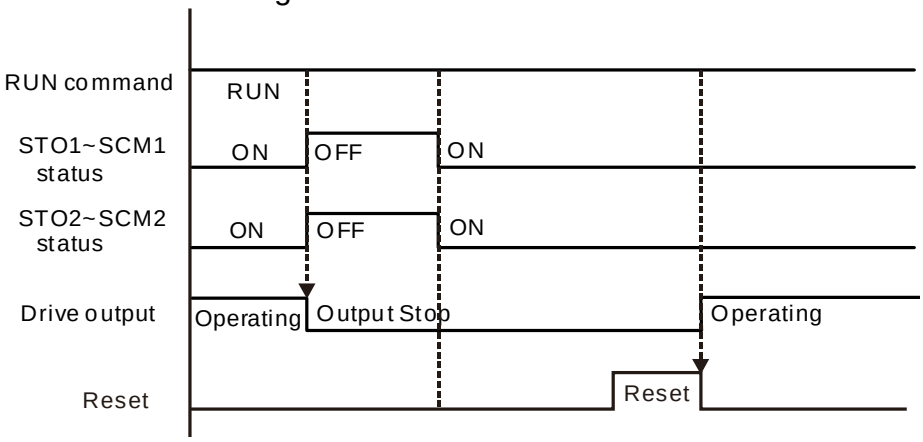


Figure 5

18-5-3 STO，Pr06-44=1

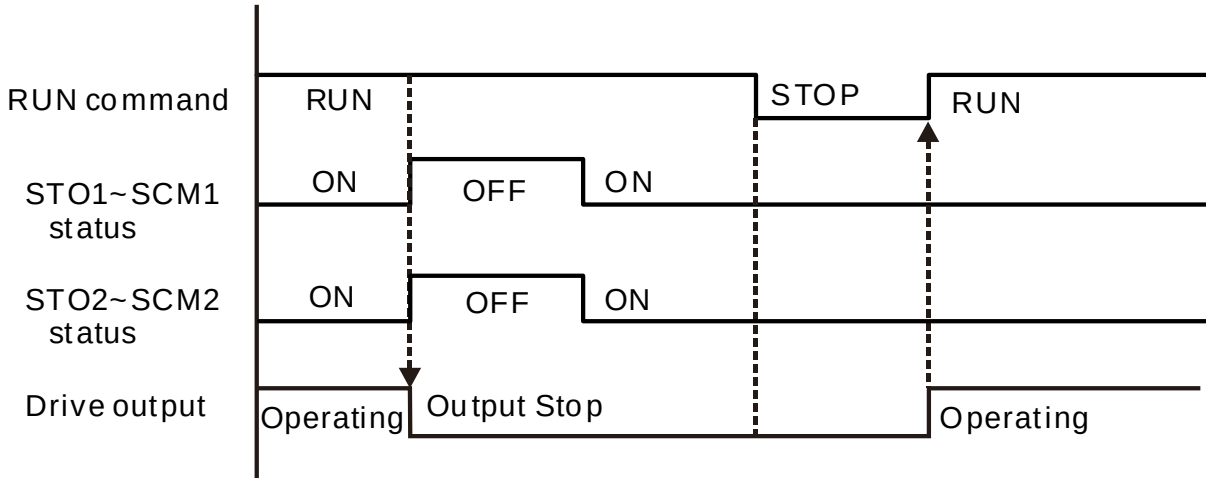


Figure 6

18-5-4 STL1

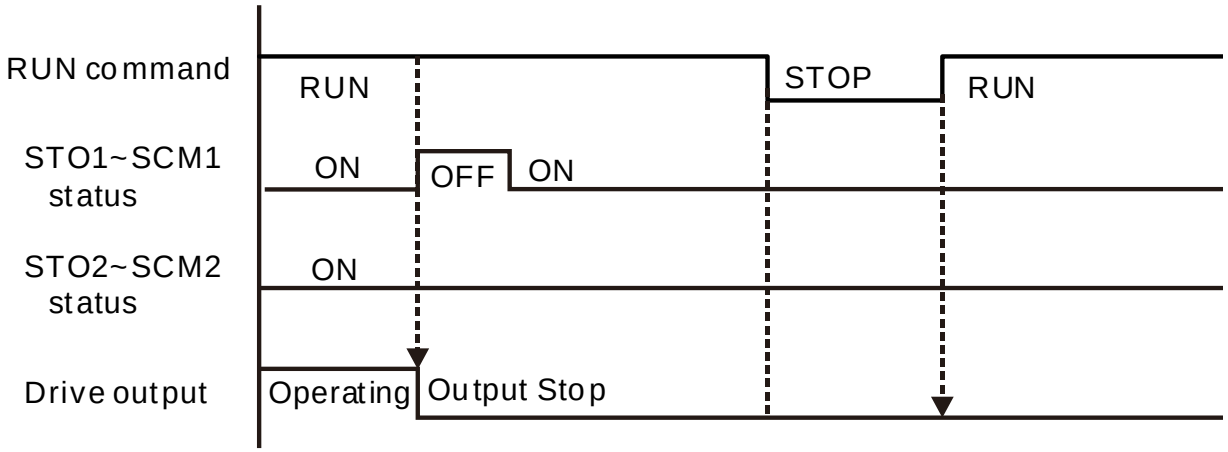


Figure 7

18-5-4 STL2

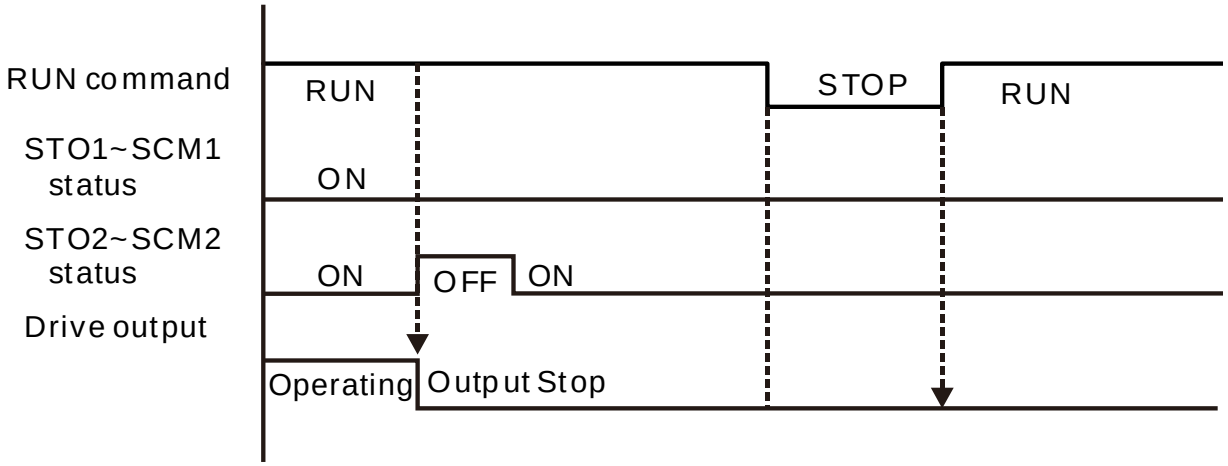


Figure 8

## 18-6 New Error code for STO function

| | |
|---|---|
| 06-17 | Present Fault Record |
| 06-18 | Second Most Recent Fault Record |
| 06-19 | Third Most Recent Fault Record |
| 06-20 | Fourth Most Recent Fault Record |
| 06-21 | Fifth Most Recent Fault Record |
| 06-22 | Sixth Most Recent Fault Record |

Settings
72：Channel 1(STO1~SCM1)internal hardware error
76：STO(Safety Torque Off
77：Channel 2(STO2~SCM2)internal hardware error
78：Channel 1 and Channel 2 internal hardware error

| Error code | Name | Description |
|---|---|---|
| 76 | STO | Safety Torque Off function active |
| 72 | STL1 (STO1~SCM1) | STO1~SCM1 internal hardware detect error |
| 77 | STL2 (STO2~SCM2) | STO2~SCM2 internal hardware detect error |
| 78 | STL3 | STO1~SCM1 and STO2~SCM2 internal hardware detect error |

The Old/New control board and Old/New I/O card:

| CP2000 | v1.20 firmware | v1.21 firmware |
|---|---|---|
| v1.20 control board + old I/O card (no STO function) | OK | OK |
| v1.20 control board + new I/O card (with STO function) | Error | Error |
| v1.21 control board + old I/O card (no STO function) | Error | Error |
| v1.21 control board + new I/O card (with STO function) | Error | OK |